Clock radio ASTOR MF029 MF029/01

Service
Service
Service

ILLUSTRATED MF029/01

Service Manual

SPECIFICATIONS

Frequency range	— AM	520-1620 kHz
	— FM (MF029/01 only)	88- 108 MHz
Intermediate frequency	— AM	455 kHz
	— FM (MF029/01 only)	10.7 MHz
Mains supply		240 V 50 Hz
Mains consumption	— MF029	6 watts
	— MF029/01	8 watts
Loudspeaker, 4" (100 mm) dia.		8 ohms impedance
Output power		900 m W

The major difference between the models is that the MF029/01 is capable of F.M. reception, but the MF029 is not. The same digital clock mechanism and time-controls are employed in both models. The position occupied by the light-dimmer control (adjacent to the tuning knob), on the MF029, is used for the AM/FM/AFC switch on the MF029/01 and there is no facility for variation of dial illumination on the later model.

Access for Service

Remove all knobs (pull off). Place the model upside-down on a protected surface. Release 5 Phillips head screws from the base of the model. Restore the unit to its upright position and remove the upper part of the cabinet.

Re-assemble in the reverse order.

Subject to modification

JUNE, 1976

PHILIPS

MF029

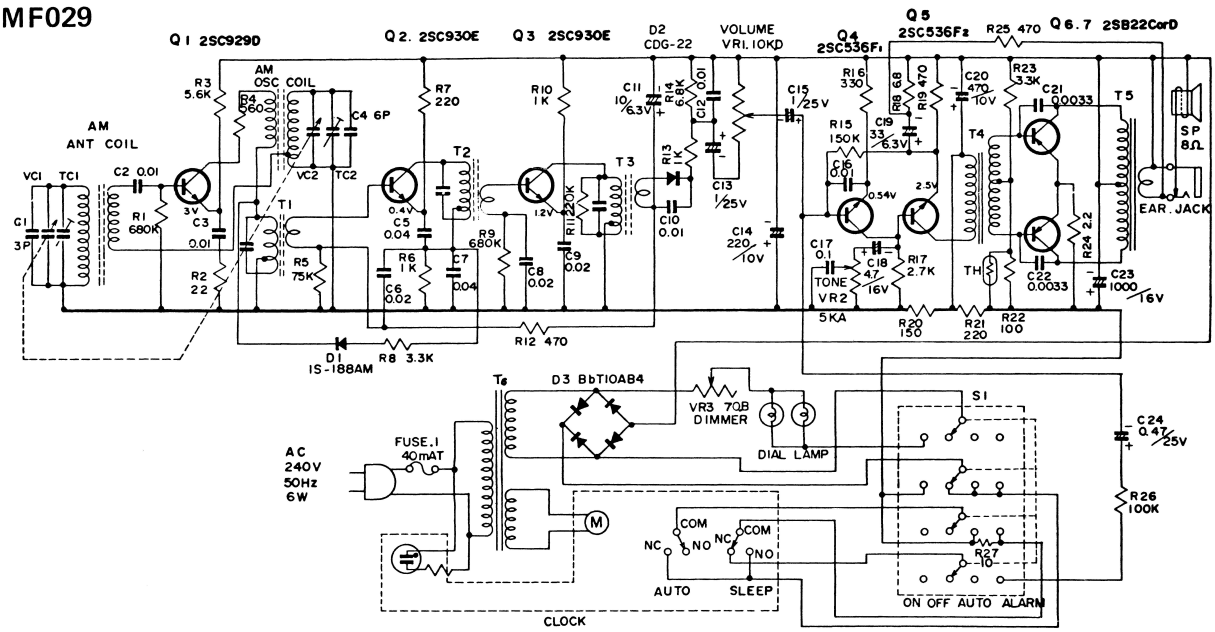

NOTE
1. ALL RESISTANCE VALUES IN OHMS. 1/4W. K=10^3
2. ALL CAPACITANCE VALUES IN MICROFARADS P=10^{-6} (DENOMINATORS INDICATE W.V)
3. VOLTAGE VALUES INDICATED ARE MEASURED FROM (−) GROUND AT NO SIGNAL WITH POWER SUPPLY AC.240V, 50Hz.

ELECTRICAL PARTS LIST

SEMICONDUCTORS

Q	DESCRIPTION	CODE NUMBER
1	Transistor, BF494 (2SC929D)	5322 130 44195
2,3	Transistor, BF494 (2SC930E)	5322 130 44195
4,5	Transistor, BC548 (2SC537 F1 & F2)	4822 130 40938
	or Transistor, BC107 (2SC536)	5322 130 40357
6,7	Transistor, AC128 (2SB22C & D)	5322 130 40095
D		
1	Diode, 1S - 188AM	4802 130 37115
2	Diode, 1N914 (CDG - 22)	5322 130 30009
3	Bridge rectifier, BY164	5322 130 30414

Note: All capacitors and resistors are standard types and values, except where shown below.

CAPACITORS

C	DESCRIPTION	V.W.	CODE NUMBER
11	10 mF Electro	6.3	4802 124 47005
13	1 mF Electro	25	4802 124 47037
14	220 mF Electro	10	4802 124 47006
15	1 mF Electro	25	4802 124 47037
18	4.7 mF Electro	16	4802 124 47034
19	33 mF Electro	6.3	4802 124 47058
20	470 mF Electro	10	4802 124 47052
23	1000 mF Electro	16	4802 124 47051
24	0.47 mF Electro	25	4802 124 47065
VC1,2	Tuning gang		4802 125 27007

RESISTORS

	DESCRIPTION	CODE NUMBER
VR1	10K rotary potentiometer, Taper D (Volume)	4802 100 37001
VR2	5K rotary potentiometer, Taper A (Tone)	4802 100 37002
VR3	70 ohm rotary potentiometer, Taper B (Dimmer)	4802 104 17001
TH	Thermistor	4802 116 37004

INDUCTORS

T	DESCRIPTION	CODE NUMBER
—	A.M. Antenna coil (rod aerial assembly)	4802 158 67068
—	A.M. Oscillator coil	4802 153 17111
1	I.F. Transformer "A"	4802 153 17112
2	I.F. Transformer "B"	4802 153 17113
3	I.F. Transformer "C"	4802 153 17114
4	Input Transformer	4802 142 47003
5	Output Transformer	4802 140 67001
6	Mains Transformer	4802 146 27008
	Loudspeaker (8 ohm)	4802 240 47007

ELECTRICAL PARTS LIST

SEMICONDUCTORS

Q	DESCRIPTION	CODE NUMBER
1-5	Transistor, BF494 (2SC930, C, D, E, F)	5322 130 44195
6	Transistor, BF494 (2SC929 D)	5322 130 44195
7,8	Transistor (2SC536 F1 & G1)	4802 130 47151
9,10	Transistor, AC128 (2SB22C or D)	5322 130 40095
D		
1	Diode, 1S-188 AM	4802 130 37115
2	Diode, varicap, 1S-553	4802 130 37116
3,4	Diode, 1N914 (CDG - 22)	5322 130 30009
5,6	Diode, 1S-188 FM	4802 130 37115
7	Diode, 1S-188 AM	4802 130 37115
8	Bridge rectifier, BY164	5322 130 30414

All capacitors and resistors are standard types and values, except where shown below:—

CAPACITORS

C	DESCRIPTION	V.W.	TOL.+ %	CODE NUMBER
7	6p Ceramic		0.5pF	4802 122 47107
13	95p Ceramic		5	4802 122 47104
14	6p Ceramic		0.5pF	4802 122 47103
15	4p Ceramic		0.5pF	4802 122 47106
17, 20, 23	0.2mF Ceramic		+80-20	4802 122 47108
25	2p Ceramic		0.5p	4802 122 47105
35	6p Ceramic		0.5p	4802 122 47103
40	4.7mF Electro	6.3		4802 124 47015
41	10mF Electro	6.3		4802 124 47005
42	1mF Electro	16		4802 124 47037
43	1mF Electro	16		4802 124 47037
44	33mF Electro	6.3		4802 124 47058
45	220 mF Electro	10		4802 124 47006
46	470 mF Electro	10		4802 124 47052
47	1000 mF Electro	16		4802 124 47051
48	0.47 mF Electro	16		4802 124 47065
49	4.7 mF Electro	16		4802 124 47034
CV1-4	Tuning gang (incl. trimmers CT 1-4)			4802 125 47013

RESISTORS

	DESCRIPTION	CODE NUMBER
VR1	10K rotary potentiometer, taper D (Volume)	4802 100 37001
VR2	5K rotary potentiometer, taper A (Tone)	4802 100 37002
TH	Thermistor	4802 116 37004

INDUCTORS

L	DESCRIPTION	CODE NUMBER
1	FM antenna coil	4802 157 47033
2	FM R.F. coil	4802 157 47034
3	I.F. trap	4802 153 57042
4	FM oscillator coil	4802 157 47035
5	AM rod aerial assembly	4802 158 67068
6	AM oscillator coil	4802 153 17111
T		
1	FM I.F. transformer-A	4802 153 57043
2,3	FM I.F. transformer-B, C	4802 153 57044
4	FM I.F. transformer-D	4802 153 57045
5	FM I.F. transformer-E	4802 153 57046
6	AM I.F. transformer-A	4802 153 17112
7	AM I.F. transformer-B	4802 153 17113
8	AM I.F. transformer-C	4802 153 17114
9	Input transformer	4802 142 47003
10	Output transformer	4802 140 67001
11	Mains transformer	4802 146 27008

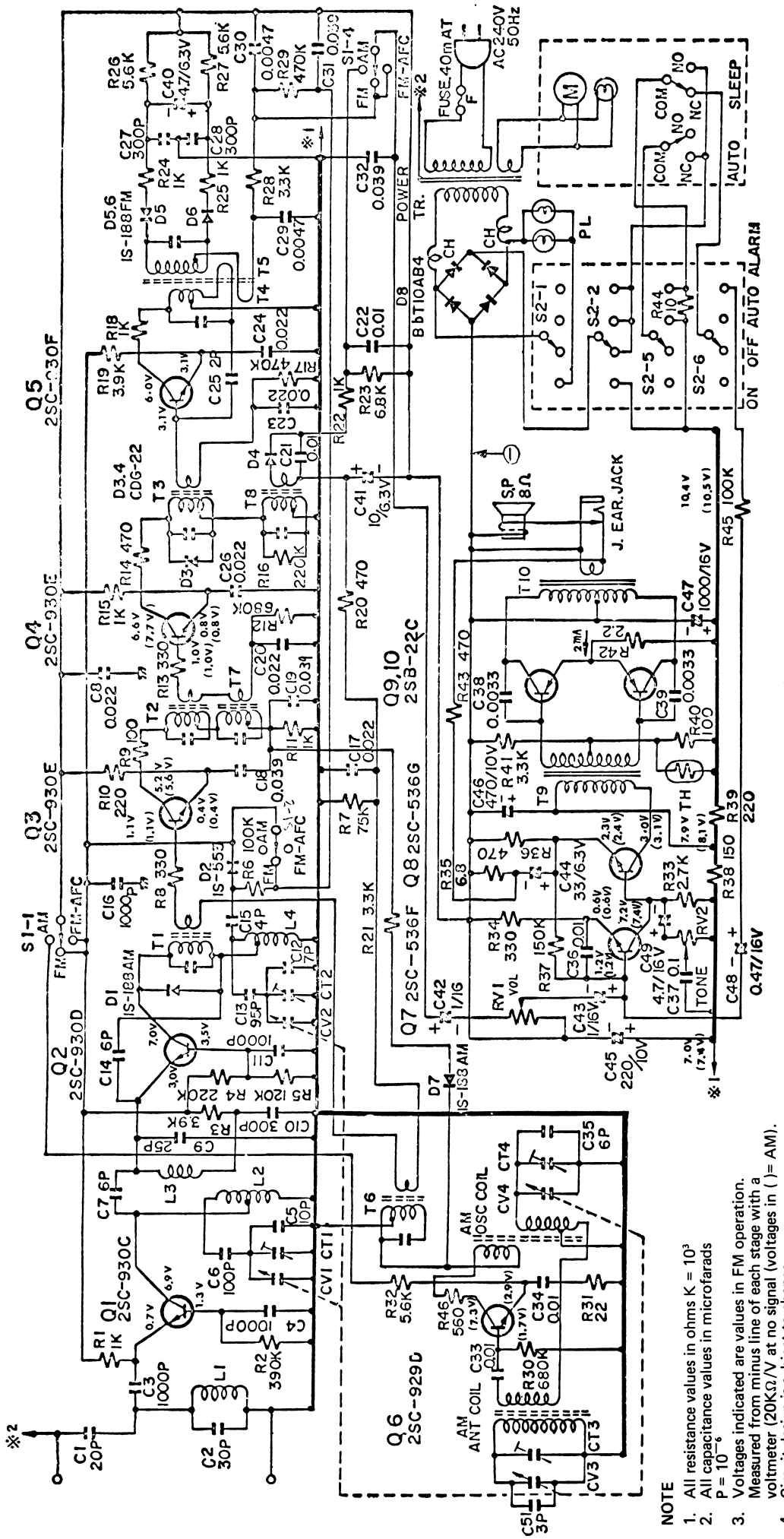

NOTE

1. All resistance values in ohms K = 10^3
2. All capacitance values in microfarads P = 10^{-6}
3. Voltages indicated are values in FM operation. Measured from minus line of each stage with a voltmeter (20KΩ/V at no signal (voltages in ( )= AM).
4. Circuit design is subject to change.

MECHANICAL PARTS LIST

DESCRIPTION	CODE NUMBER
Antenna Holder	4802 404 27058
Cabinet Moulding (lower)	4802 426 67001
Cabinet Moulding (upper)	4802 426 47001
Clock Window — clear plate	4802 459 47054
— plastic surround (light shield)	4802 459 57003
Dial background strip	4802 466 77002
Dial cursor assembly	4802 450 87006
Dial drum	4802 528 87004
Dial drum spring	4802 492 37164
Dial plate (clear)	4802 454 17053
Dial scale — MF029 only	4802 333 37002
— MF029/01 only	4802 333 37016
Digital clock mechanism (GC 2323)	4802 344 47001
Earphone socket	4802 267 37002
Fuseholder — MF029 only	4822 256 30128
— MF029/01 only	4802 256 37006
Fuse, 60mA, delayed	4802 253 57007
Heatsink	4802 255 47034
Knob, alarm setting	4802 413 57006
— spring, for above	4802 492 37009
Knob, clock setting (on/off/auto/alarm)	4802 413 37012
Knob, sleep control	4802 413 37013
— spring, for above	4802 492 67011
Knob, time setting	4802 413 47018
— spring for above	4802 492 67012
Knob, control, 4x (Vol, Tone, Tuning, etc)	4802 413 37014
Lamp assembly, clock (lamp & series resistor)	4802 134 27001
Lamp, dial, 2x	4802 134 47023
Lamp reflector	4802 462 77108
Microswitch	4802 271 37002
Set of screws (cabinet fixing, etc)	4802 310 37012
Stand for cabinet	4802 462 77018
— flanged ring to secure stand to cabinet	4802 466 97005
— rubber foot	4802 462 77017
— spacer (nylon friction disc)	4802 466 97006
Switch, rotary, 4p.4way (on/off/auto/alarm)	4802 273 67005
— mounting bracket, for above	4802 404 27023
Switch, rotary (MW/FM/AFC) — MF 029/01 only	4802 273 37006
Tuning shaft	4802 528 87003
Wordmark, "Astor"	4802 459 17025

ACCESSORIES

Earphone	4802 242 47005

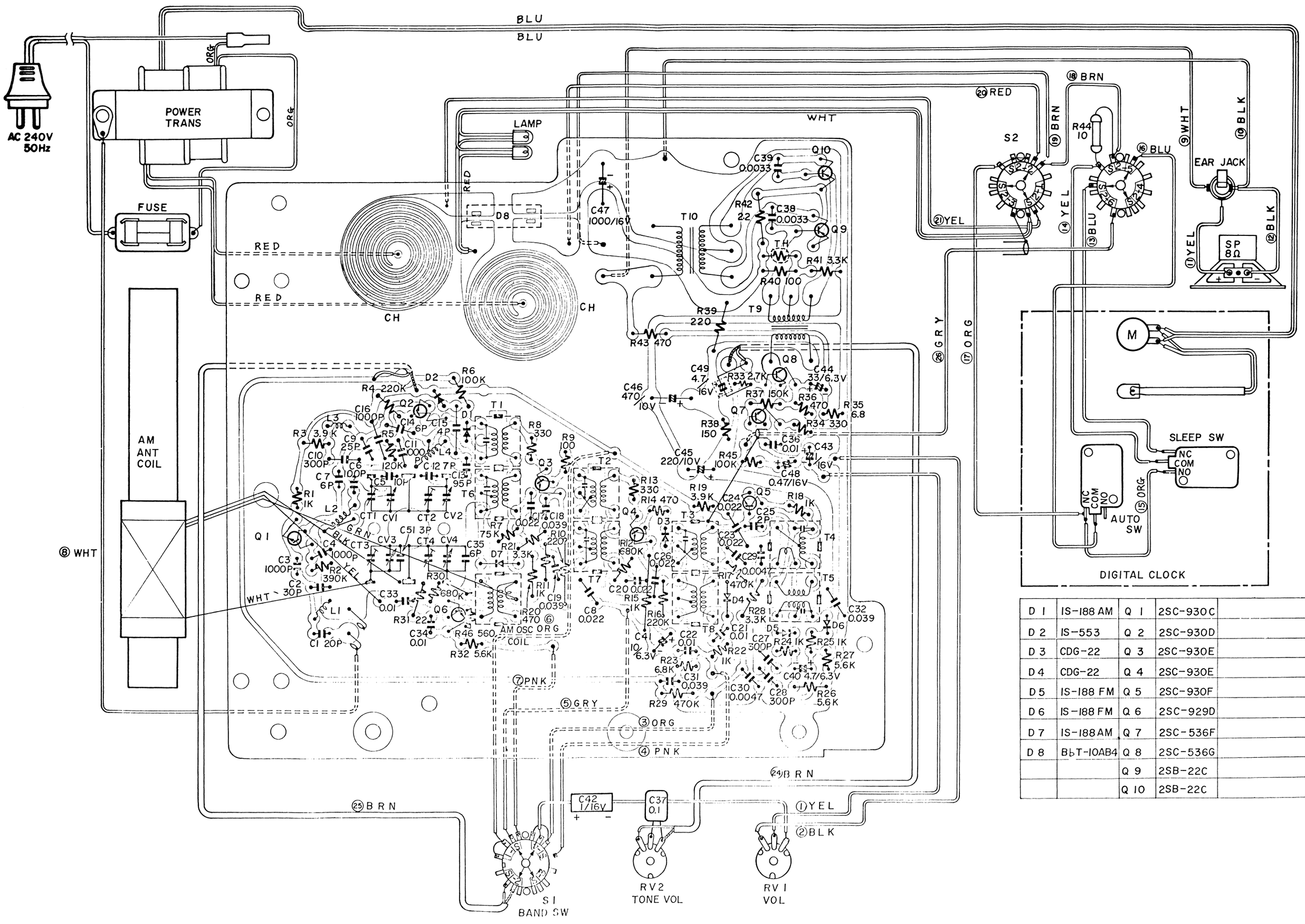

D 1	IS-188 AM	Q 1	2SC-930C	
D 2	IS-553	Q 2	2SC-930D	
D 3	CDG-22	Q 3	2SC-930E	
D 4	CDG-22	Q 4	2SC-930E	
D 5	IS-188 FM	Q 5	2SC-930F	
D 6	IS-188 FM	Q 6	2SC-929D	
D 7	IS-188AM	Q 7	2SC-536F	
D 8	BbT-10AB4	Q 8	2SC-536G	
		Q 9	2SB-22C	
		Q 10	2SB-22C	