JVC

VICTOR COMPANY OF JAPAN, LIMITED
STEREO DIVISION

Printed in Japan
— 5307 — O —

JVC

SERVICE MANUAL

MODEL

MF-33R

3 IN 1 HI-FI MUSIC SYSTEM

No. 2457
July 1978

Contents

	Page
Cautions for Safety Assurance at the Service	2
Specifications	3
Features	3
Name of External Parts and Internal Parts	4
Disassembly Instruction	5
Record Player Adjustment	6
How to Engage Dial String	6
How to Remove Cassette Door Holder	7
Removal of Cassette Mechanism	7
Check Point After Replacement of Rotation Parts	7
Head Replacement and Adjustment	8
Cassette Deck Circuit Board Adjustment	8
Tuner Alignment	10
Block Diagram	12
Circuit Board Diagrams	13
Tuner Circuit Board	13
Control Amp. Circuit Board	14
Cassette Amp. Circuit Board	15
Power Amp. Circuit Board	16
Service Parts List	17
Circuit Board Parts	17,18
Unit Parts	19
Record Player Mechanism Parts	20
Cassette Unit	20
Exploded View of Record Player Mechanism	21
Exploded View of Cassette Mechanism	22
Cassette Mechanism Parts	23
Characteristics of Transistors	24
Transistor and IC Lead Identification	24
Terminal Voltages of Transistor & IC	26
Accessories List	26
Schematic Diagram	27
Tuner Circuit	27
Control Amplifier	27
Cassette Circuit	28
Power Source & Amplifier	28

NOTE:
FOR REPAIR OF SPEAKER BAFFLE MODEL BA-33, PLEASE REFER TO THE SERVICE MANUAL (No. 7021).

Cautions for Safety Assurance at the Service

Cautions for safety assurance at the service
In order to prevent from accidents, like fire or shock hazard, please keep the following points for the safety.

1. The parts marked with ⚠ in the list of this manual are safety assurance parts.
   When replacing this kind of parts, make sure to use the specified one.
2. Although in case of replacing the other kind of parts than ⚠ mark, it is recommended to use the parts listed in this manual to keep appliance safe and reliable.
3. When wire connection is made, solder the connecting part after winding the wire round the terminal a few turns in order to prevent easy disconnection.
4. When replacing the parts in the circuit marked in the schematic diagrams use only the listed parts in this manual. The marked circuit:
5. The symbol mark is showing a fusible resistor, please use the listed parts.
6. The heat radiating parts (resistor, transistor, etc.) should be spaced enough from printed circuit board, plastics or another electrical parts to be free from its heat.
   Some parts may radiate big heat when transistor or circuitry has been damaged.
7. When altered the working voltage or frequency of the appliance make sure to specify it on the appliance and its carton case.

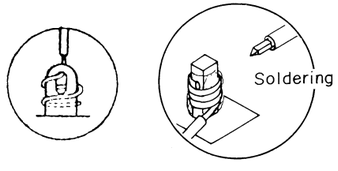

Memo

Cassette Circuit

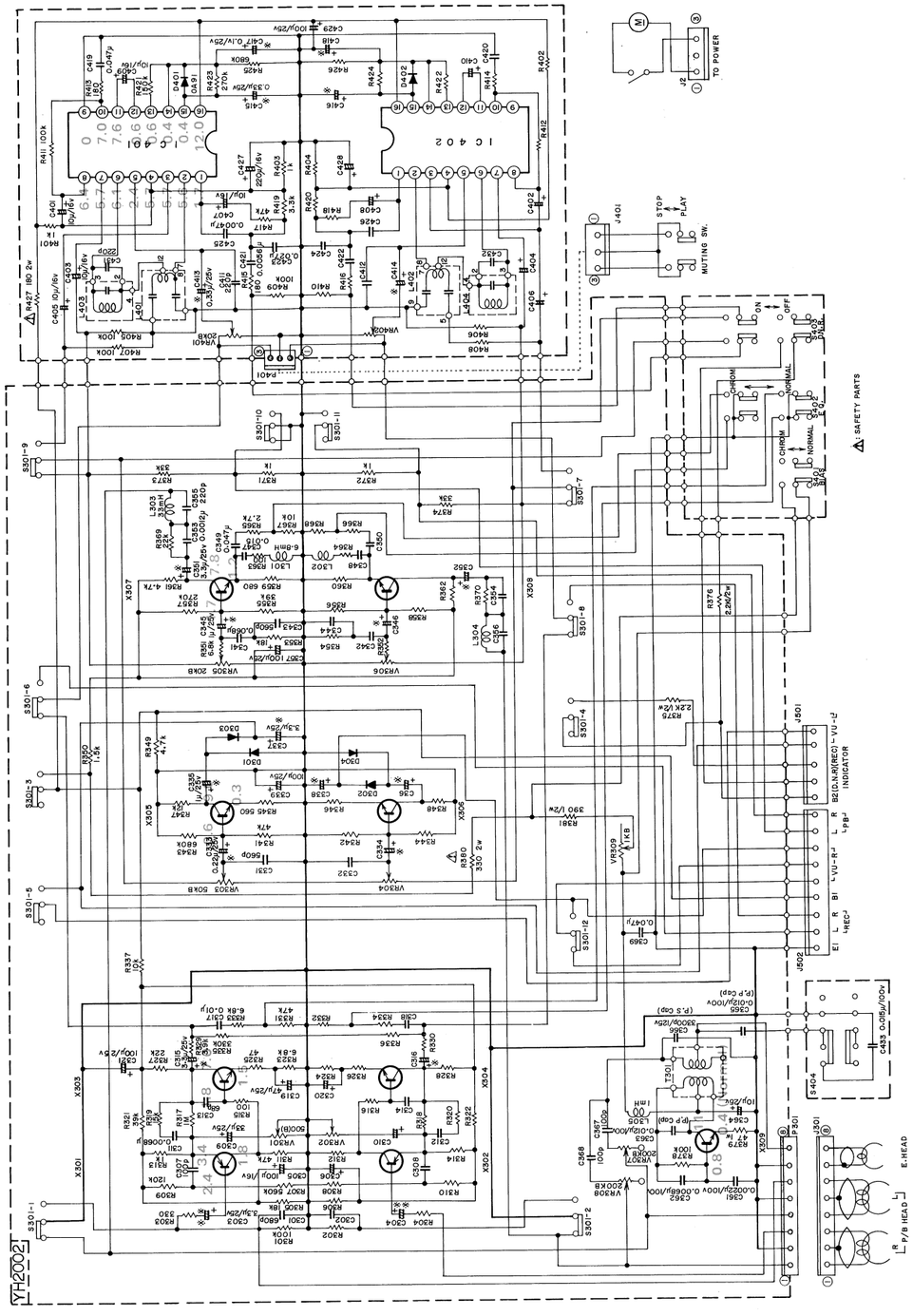

Fig. 36

Note: 1. Indicated voltages (Red) are measure with a 20kΩ/V tester.
Refer to page 26 for voltages measured by VTVM.
2. All fixed resistors are 1/4 watts unless otherwise noted.
3. Subject to change without notice for improvement.

⚠ : SAFETY PARTS

Power Source & Amplifier

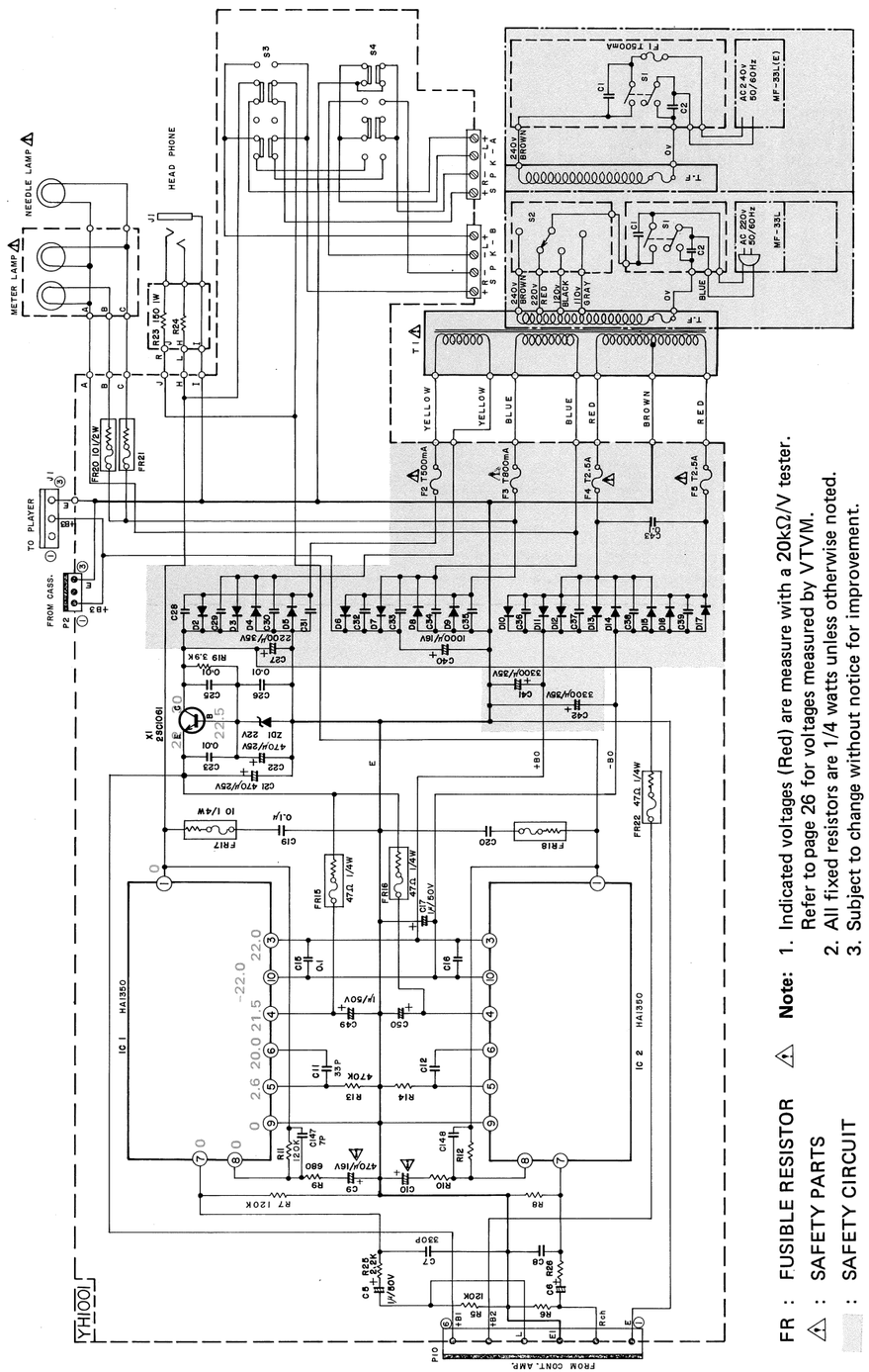

Fig. 37

Note: 1. Indicated voltages (Red) are measure with a 20kΩ/V tester.
Refer to page 26 for voltages measured by VTVM.
2. All fixed resistors are 1/4 watts unless otherwise noted.
3. Subject to change without notice for improvement.

FR : FUSIBLE RESISTOR
⚠ : SAFETY PARTS
: SAFETY CIRCUIT

Schematic Diagram

Tuner Circuit

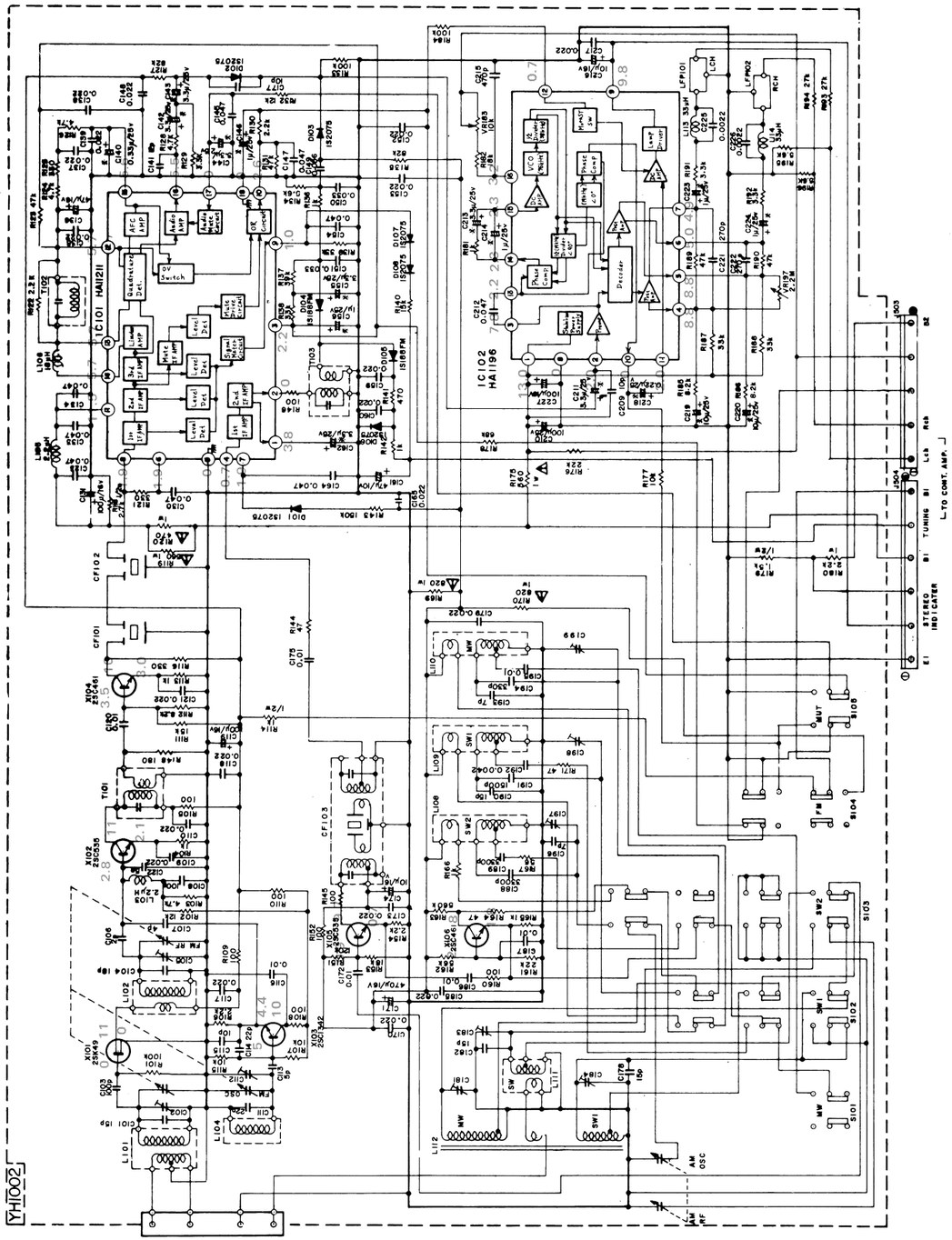

Fig. 34

Note: 1. Indicated voltages (Red) are measure with a 20kΩ/V tester.
Refer to page 26 for voltages measured by VTVM.
2. All fixed resistors are 1/4 watts unless otherwise noted.
3. Subject to change without notice for improvement.

⚠ : SAFETY PARTS

Control Amplifier

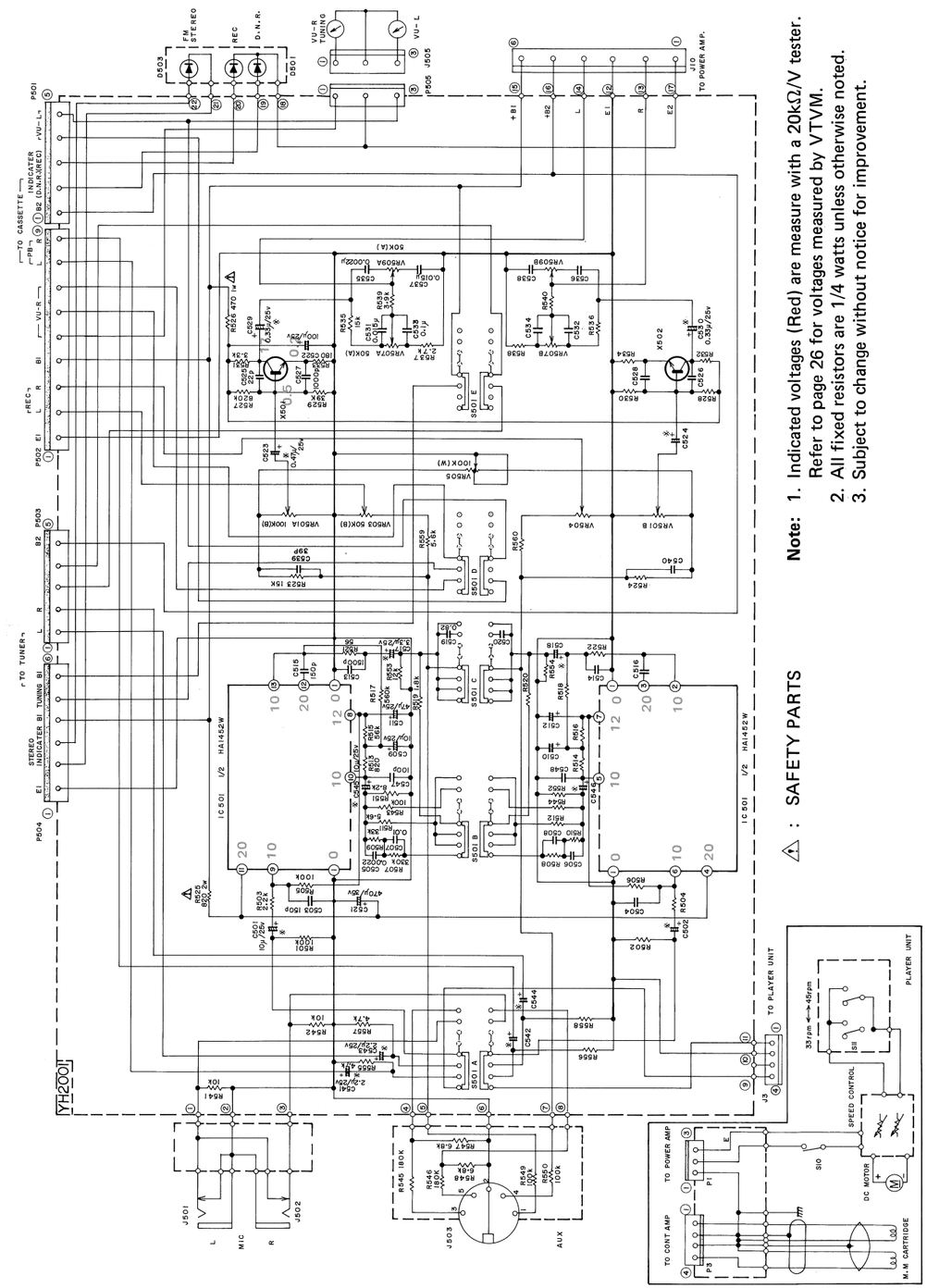

Fig. 35

Note: 1. Indicated voltages (Red) are measure with a 20kΩ/V tester.
Refer to page 26 for voltages measured by VTVM.
2. All fixed resistors are 1/4 watts unless otherwise noted.
3. Subject to change without notice for improvement.

⚠ : SAFETY PARTS

Terminal Voltages of Transistor & IC

Symbol No.	Transistor No.	V(B)	V(C)	V(E)	Circuit Used	Symbol No.	Transistor No.	V(B)	V(C)	V(E)	Circuit Used
X1	2SC1061C	24	32	23	POWER	X301,302	2SA872E	2.8	3.5	2.2	CASSETTE
X102	2SC535C	3	11	2.2	TUNER	X303,304	2SC1345D	2.2	7.9	1.6	"
X103	2SC1342C	5	10.5	4.6	"	X305,306	2SC458D	1	9	0.4	"
X104	2SC461C	3.8	10	3.0	"	X307,308	2SC458D	1.9	8	1.2	"
X105	2SC535C	1.2	10	0.6	"	X309	2SD467C				"
X106	2SC461C	2.4	9.7	1.8	"	X501,502	2SC1345E	0.85	17	0.22	CONTROL

Symbol No.	1	2	3	4	5	6	7	8	9	10	11	12	13	14	15	16	17	18	
IC1,2	0	–	23	22	2.7	20	0	0	0	-22	–	–	–	–	–	–	–	–	POWER
IC101	3.8	0	2.5	0.6	0	2.2	2.2	2.2	3.6	0	12	5.7	5.7	5.7	6.2	6.5	0	0	TUNER
IC102	10.5	3.0	7.8	8	8	4	4	0	10.5	3.5	3.5	0	2.5	2.5	2.3	3.2	–	–	"
IC401,402	6	6.3	6.3	6.3	6.1	6.3	6	6.6	0	6.7	7.0	0.7	0.7	0.6	0.6	12.5	–	–	DOLBY NR
IC501	0	10	18	19	10	10	10	10	10	10	19	18	10	0	–	–	–	–	CONTROL

UNIT: VOLT, MEASURED BY V.T.V.M.

Accessories List

Item No.	Parts Number	Description	Q'ty
1	YDK30011-040	Instruction Book	1
2	G8395-1	EP Adaptor	1
3	Y00125-001	FM Antenna Ass'y	1
4	YNA40034-001	Antenna Wire Ass'y	1

Specifications

Cassette deck

Type	: Stereo Cassette Deck with Auto-Stop
Track System	: 4-Track, 2-Channel Stereo
Bias & Erase	: AC Bias & AC Erase
Frequency Response	: 30–13,000Hz (Normal Tape) 30–15,000Hz (Chrome Tape)
Wow and Flutter	: 0.15% (WRMS)
Signal to Noise Ratio	: Better than 50dB (at Peak Level) without Dolby noise reduction. The S/N ratio is improved by 5dB at 1kHz and 10dB above 5kHz with Dolby noise reduction on.

Amplifier

Type	: IC Power Amplifier with Bass and Treble Controls 15W RMS per channel at 8 ohms
Music Power	: 40W

Tuner

Type	: 4-Band (FM/MW/SW1/SW2) Stereo Tuner
Tuning Range	: FM 88–108MHz MW 520–1600kHz SW1 2.3–6MHz SW2 6–18MHz
Antenna	: FM 300 ohms balanced
Sensitivity for FM	: 4μV
FM Stereo Separation	: 40dB (1kHz)

Turntable

Type	: Belt-Drive Auto-Return
Speeds	: 33-1/3, 45rpm
Platter	: 28cm (11")
Motor	: FG Servo Motor
Cartridge	: Moving Magnet
Stylus	: Diamond

General

Power Sources	: 110/120/220/240V, 50/60Hz or 240V, 50/60Hz

JVC recommends a JVC 2-way Air-Suspension Speaker System with Passive Radiator (Drone Cone) Model BA-33 for matching performance and appearance of your MF-33R.

Features

- 15 WATTS RMS PER CHANNEL POWER OUTPUT
- 4-BAND (FM/MW/SW1/SW2) RECEIVER
- DOLBY NOISE REDUCTION SYSTEM
- AUTO-STOP STEREO CASSETTE DECK
- AUTO-RETURN BELT-DRIVE TURNTABLE
- SPEAKER SELECTOR SWITCH (A, B, A + B)

Name of External Parts and Internal Parts

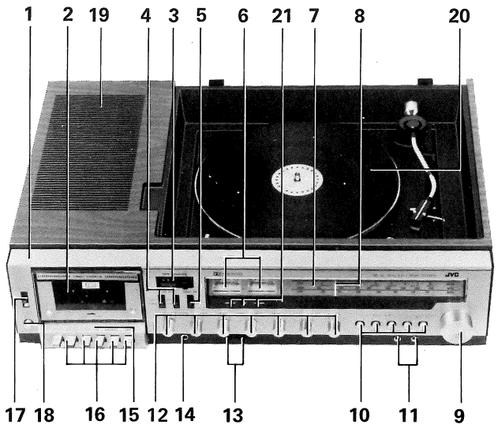

Fig. 1

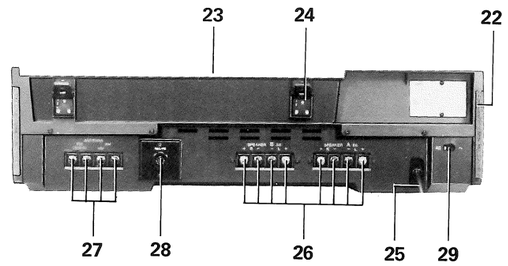

Fig. 2

Dwg. No.	Parts Name	Parts No.
22	Side Panel Ass'y	Refer to Parts List Page 19
23	Dust Cover Ass'y	"
24	Hinge Ass'y	Y30120-003
25	Bottom Case	*Y10082-001
26	Speaker Terminals	*QMB0484-002
27	Antenna Terminals	*QMB0484-001
28	DIN Socket Ass'y	*Y00122-001
29	Voltage Selector	QSR0074-001

Dwg. No.	Parts Name	Parts No.
1	Front Panel Ass'y	Refer to Parts List Page 19
2	Cassette Door Holder Ass'y	"
3	Tape Counter	TGW291324-0A
4	Tape Select Switch	*QSS4201-051(EQ) QSS2201-003(BIAS)
5	Dolby NR Switch	QSS4201-051
6	Level Meter	*Y00119-001
	Lamp (Meter)	QLP4101-004B
7	Dial Scale	*Y20075-002
8	Dial Needle	*Y40567-001
	Lamp (Needle)	Y00124-400
9	Tuning Knob	*Y40560-001
10	Push Switch Knobs	*Y40562-001
	Spring (Knob)	Y40462-001
11	Microphone Jacks	*Y00127-001
12	Control Knobs	*Y40561-001
13	Speaker Select Knobs	Y40428-001
	Push Shaft	Y30264-001
14	Headphone Jack	QMS6302-015
15	Cassette Grille Ass'y	Refer to Parts List Page 19
16	Cassette Push Buttons	"
17	Beat Cut Switch	*QSS2301-005
18	Power Switch Knob Ass'y	*Y40490-002
19	Cabinet Case	Y10063-001
20	Player Mechanism	Refer to Parts List Page 20
21	Indicator	TLR114

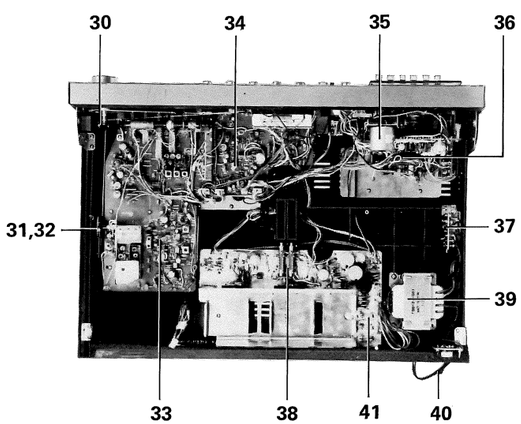

Fig. 3

Dwg. No.	Parts Name	Parts No.
30	Tuning Shaft Ass'y	*YKA40065-002
31	Dial Drum	QZD1115-001
32	Spring (Drum)	Y40276-002
33	Tuner Circuit Board Ass'y	Refer to Parts List Page 17
34	Control Circuit Board Ass'y	Refer to Parts List Page 18
35	Cassette Mechanism Ass'y	Refer to Parts List Page 23
36	Cassette C. Board Ass'y	Refer to Parts List Page 17
37	Power Switch C.B. Ass'y	Refer to Parts List Page 18
38	Power Amp. C.B. Ass'y	"
39	Power Transformer	Refer to Parts List Page 19
40	Power Cord	"
41	Fuse	"

HA1452W

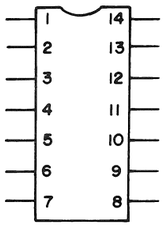

Fig. 31

FOR CONTROL Amp.

IC501 HA1452W

1. E
2. R OUTPUT
3. BY PASS
4. +B
5. NF INPUT
6. R INPUT
7. BY PASS
8. BY PASS
9. L INPUT
10. NF INPUT
11. +B
12. BY PASS
13. L OUTPUT
14. –

HA11211

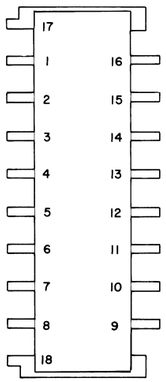

Fig. 32

FOR FM/AM IF Amp.

IC101 HA11211

1. BY PASS
2. AM IF OUT
3. AGC INPUT
4. AM INPUT
5. E
6. BY PASS
7. BY PASS
8. FM INPUT
9. METER OUT
10. MUTE OUT
11. +B
12. REFERENCE DET INPUT
13. QUADRATURE DET INPUT
14. LIMITER AMP OUTPUT
15. BY PASS
16. FM DET OUTPUT
17. MUTE INPUT
18. E

HA1350

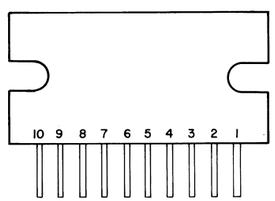

Fig. 33

FOR POWER Amp.

IC1,2 HA1350

1. OUTPUT
2. –
3. UNSTABILIZED MAIN SUPPLY INPUT (+B)
4. MUTE B (STABILIZED)
5. BY PASS
6. BY PASS
7. INPUT
8. NF INPUT
9. E
10. UNSTABILIZED MAIN SUPPLY INPUT (-B)

Characteristics of Transistors

Symbol No.	Transistor No.	Sort	Pc	fT
X1	2SC1061C	Silicon	25W	8MHz
X101	2SK49H	"	72mW	250MHz
X102,105	2SC535C	"	100mW	700MHz
X103	2SC1342C	"	100mW	150MHz
X104,106	2SC461C	"	200mW	230MHz
X301,302	2SA872E	"	300mW	120MHz
X303,304,501,502	2SC1345E	"	200mW	230MHz
X305,306,307,308	2SC458D	"	200mW	230MHz
X309	2SD467C	"	500mW	280MHz

Transistor and IC Lead Identification

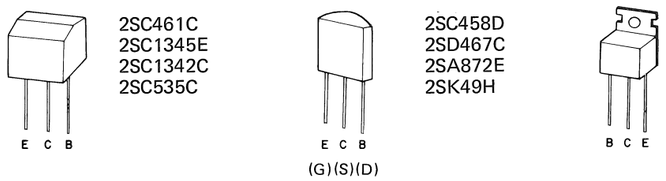

Fig. 28

HA1196

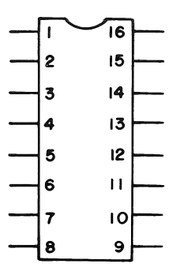

Fig. 29

FOR FM STEREO MPX DECODER

IC102 HA1196

1. +B
2. INPUT
3. PRE AMP OUTPUT
4. L OUTPUT
5. R OUTPUT
6. R F.B. INPUT
7. L F.B. INPUT
8. E
9. ST. IND
10. ┐ LOW PASS FILTER
11. ┘
12. MUTE +B
13. PHASE COMP INPUT
14. ┐ LOW PASS FILTER
15. ┘
16. 76kHz TIME CONST

NE545B

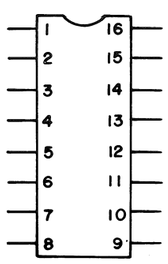

Fig. 30

FOR DOLBY

IC401,402 NE545B

1. INPUT (SUPRESSOR)
2. INPUT (FILTER OUT)
3. OUTPUT (MONITER)
4. REFERENCE
5. INPUT
6. OUTPUT (FILTER IN)
7. OUTPUT (ENCORD OUT)
8. BY PASS
9. GND
10. BY PASS
11. OUTPUT (CONTROL)
12. INPUT (CONTROL)
13. REFERENCE
14. BY PASS
15. BY PASS
16. +B

Disassembly Instruction

Step 1.

Record Player

Remove 2 screws with motor board floated and disconnect 2 plugs from underside of player board.

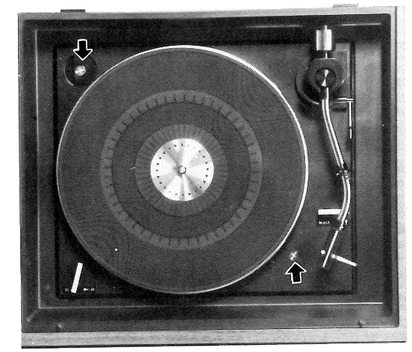

Fig. 4

Step 2.

Cabinet Case (Step 1.)

Remove 1 screw.

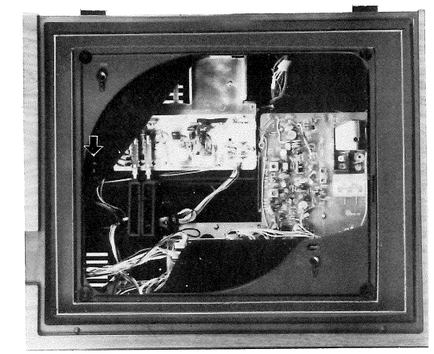

Fig. 5

Step 3.

Cabinet Case (Step 2.)

Remove 4 screws.

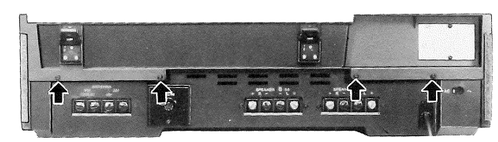

Fig. 6

Step 4.

Cabinet Case (Step 3.)

Remove both sides panels and remove 2 screws of arrow mark ⬆ on both sides.

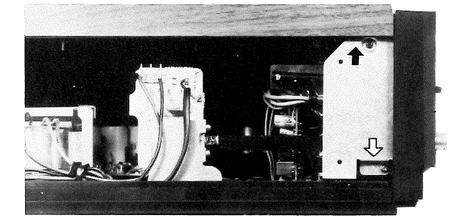

Fig.7

Step 5.

Cassette Mechanism

- Remove cassette door holder. (Refer to page 7)
- Remove 4 screws in Fig. 8 and remove 1 screw of arrow mark ⇩ in Fig. 7.

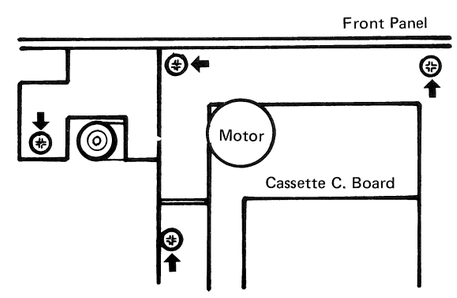

Fig. 8

Step 6.

Circuit Boards

Tuner	Remove 5 screws.
Control	Take off the control knobs and remove 6 screws.
Power	Remove screws of the speaker terminals (A & B) and remove 6 screws.

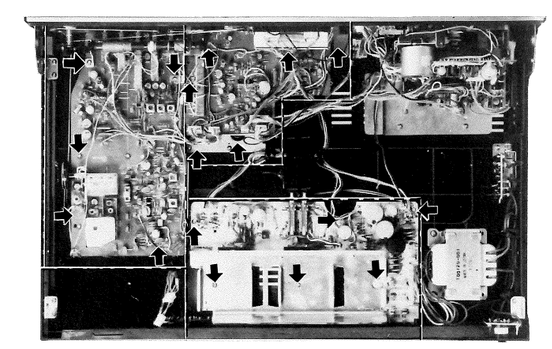

Fig. 9

Record Player Adjustment

Confirmation of Normal Operation of Auto return Mechanism

When you bring pickup head part to the position of boss (A) while keeping the Lower Trip Pawl pushed inward (Arrow B) by hand, if pickup does not move forward, operation of auto return mechanism is normal. (Fig. 10)

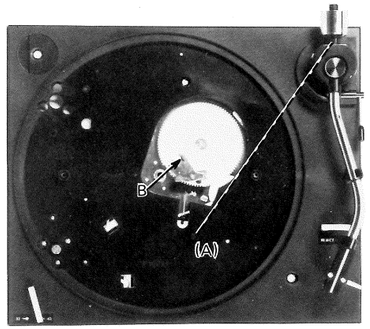

Fig. 10

Lead-out adjustment

After replacing cartridge or lead-out mechanism parts, make sure of normal operation of lead-out.

- Confirmation & Adjustment.
  1) Lead-out should be made when playing JVC test record RG-652 (pitch 3mm).
     If not, turn the adjusting screw (Fig. 11) counter-clockwise.
  2) Lead-out should not be made when playing the record RG-653 (Reverse side of RG-652).
     If it is made, turn the adjusting screw clockwise.

Repeat above 1) & 2), and fix the adjusting screw at the correct position for normal lead-out.

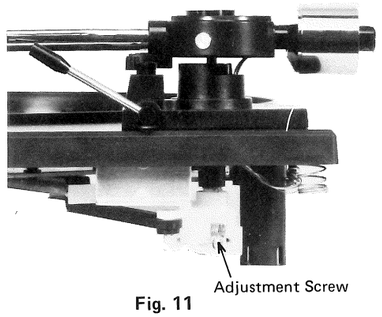

Fig. 11

Speed adjustment of turntable

Adjust two semi-fixed resistor on the motor control circuit board for each speed.

45 rpm : (A)
33 rpm : (B) in Fig. 12

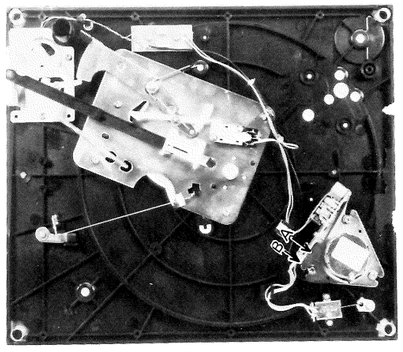

Fig. 12

How to Engage Dial String

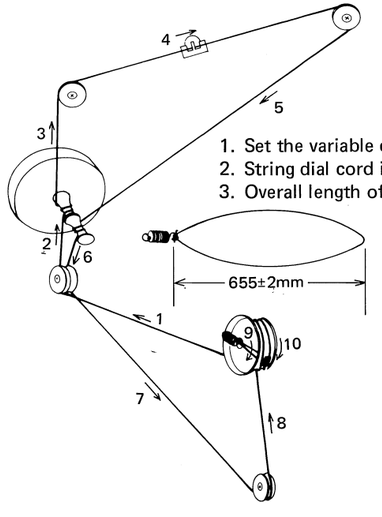

1. Set the variable capacitor on maximum.
2. String dial cord in numerical order as shown in the arrow marks.
3. Overall length of cord is 655mm.

Fig. 13

Cassette Mechanism Parts

Dwg. No.	Parts No.	Parts Name	Description
2	11090102T	Pack Spring	
5	11010281ZT	Head Panel Ass'y	
10	10630410T	Head Panel Hold	
11	020404T	Steel Ball	
12	Y00080-001	R/P Head	
13	Y00081-001	Erase Head	
14	480408T	Head Spring	
16	4080413T	Head Panel Spring	
17	9700405T	Review/Cue Spring	
19	5420408T	Play Slide Lever	
22	7150781T	Pinch Roller Ass'y	
23	6680501T	Pinch Roller Spring	
25	5720695ZT	Reel Disk Ass'y	
26	040508T	Back Tension Spring	
27	4080901T	Brake Arm	
28	4080902T	Brake Arm Spring	
29	4080903T	Brake Arm Actuator	
31	11640281ZT	Push Button Ass'y	
33	4081801T	Leaf Switch	
34	2680503T	Record Safety Lever	
35	2680515T	Stopper	
36	1320303T	Record Safety Lever Spring	
37	12790301T	Record Slide Lever	
39	10501201T	Motor Bracket	
40	581011T	Rubber	
41	581006T	Motor Rubber	
43	10451202T	Main Belt	
44	9731202T	Motor Pulley	
45	EG-510AD-TZ	Motor	
49	TGW291324-0A	Counter	
50A	10382102T	Counter Belt A	
50B	10780602T	Counter Belt B	
51	9730791ZT	Clutch Arm Ass'y	
52	2380406T	Clutch Arm Spring	
54	11640301T	Muting Arm	
60	66808ZT	FF Idler Arm Ass'y	
61	581316T	Center Spring	
62	4080804T	FF Actuator Plate	
63	4080810T	FF Actuator Spring	
64	4080815T	Rewind Actuator	
65	4080810T	Rewind Actuator Spring	
68	9701081ZT	RWD Idler Arm Ass'y	
69	2110902T	RWD Idler	
70	0209058T	RWD Idler Arm Spring	
72	4081405	Auto Lever	
73	4081407T	Auto Lever Spring	
76	4081581ZT	Slide Lever Ass'y	
77	4081510T	Slide Lever Spring	
78	4081503T	Arm Lever	
80	5421881ZT	Pause Slide Lever Ass'y	
81	5421801T	Pause Lever	
82	5421803T	Pause Lever Spring	
84	10451101T	Flywheel Capstan	
85	4081103T	Flywheel Holder	
86	3690701T	Flywheel Block	
88	8780902T	LE Spring	

NOTICE: The parts in above list are recomendable to keep in stock as spare parts.
In case if the parts not listed is needed, please write the drawing No. in the order form referring to Exploded View of Cassette Mechanism in page 22 when you order.

Exploded View of Cassette Mechanism

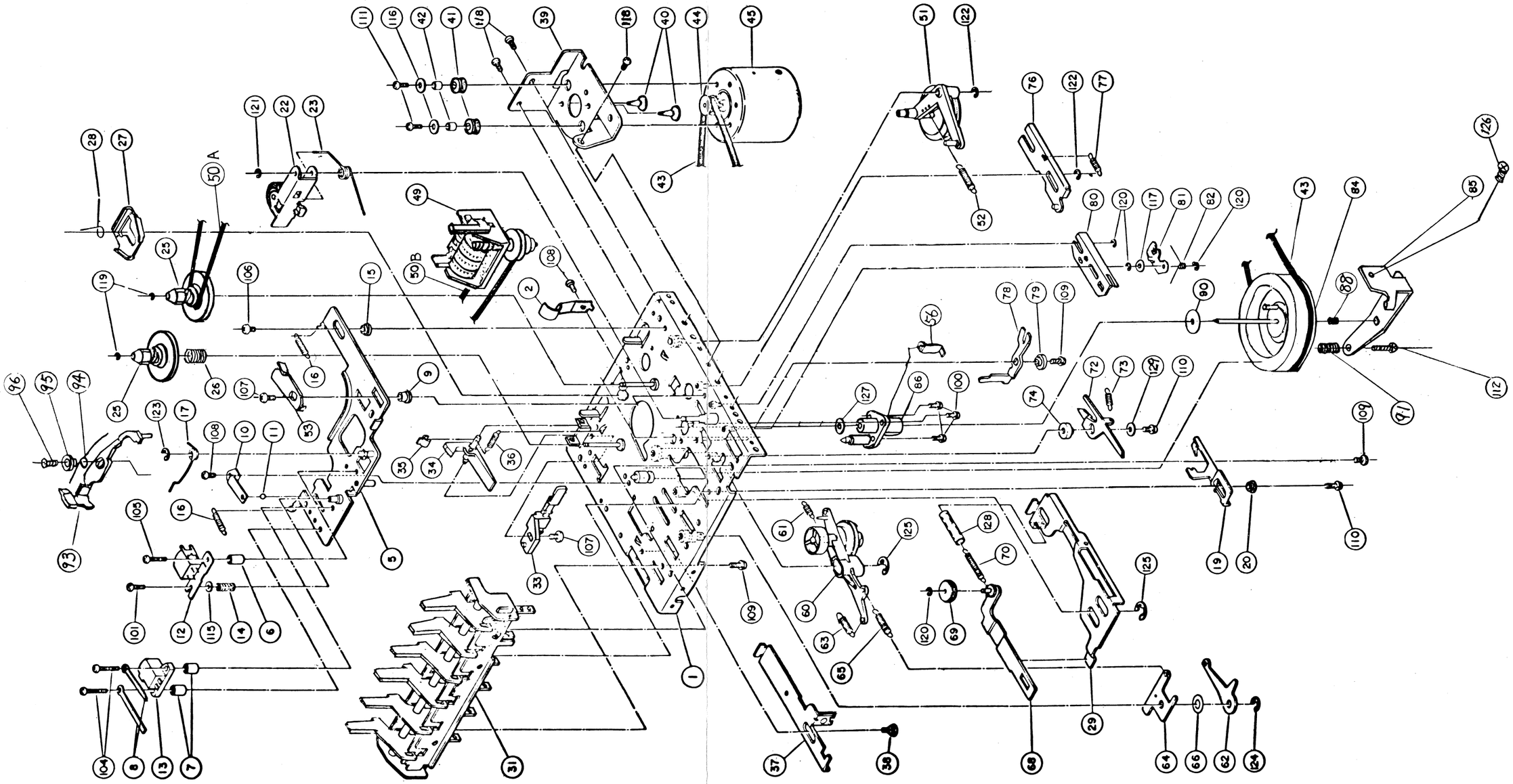

Fig. 27

Exploded View of Record Player Mechanism

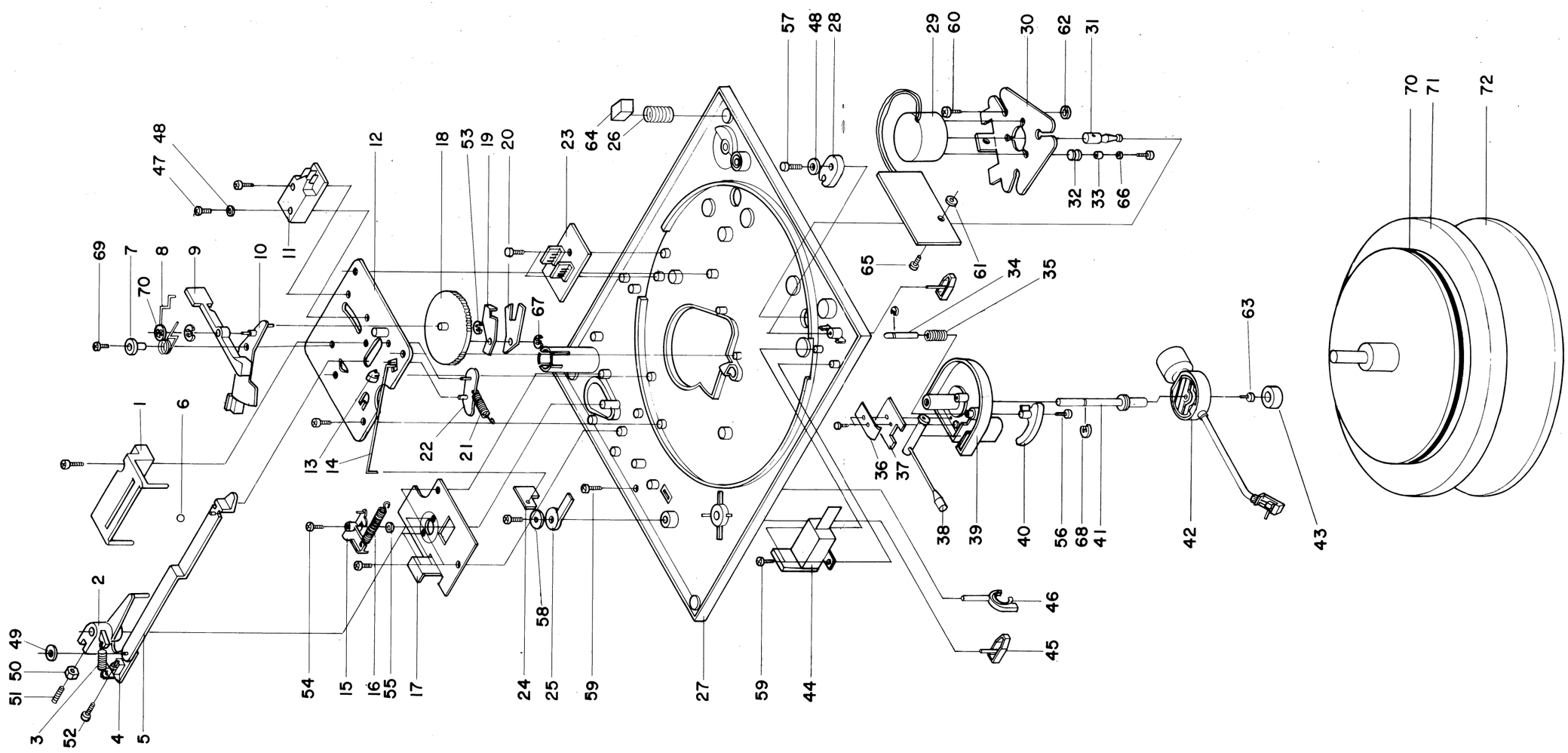

Fig. 26

Record Player Mechanism Parts

Dwg. No.	Parts No.	Parts Name	Description
1	E49873-002	Ball Holder	
2,3,4,5	Y30186-002	Arm Lever Ass'y	
6	G41505-1	Steel Ball	
9	E49657-002	Switch Lever	
11	QSM1V01-018	Micro Switch	
15	E49595-003	Elevator Cam	
18	E21656-001	Gear Sub Ass'y	
28	Y40405-001	Switch Cam	
29	MHX-5P2RDA	Motor Ass'y	
38	*Y40608-001	Lifter Lever Ass'y	
40	*Y40581-001	Elevator Arm	
42	*MP-190S	Pick up Ass'y	
44	Y00065-002	Snap Switch	
45	*Y40590-001	Knob Ass'y	
46	*Y40607-001	Arm Rest Ass'y	
70	*Y30273-001	Belt	
71	Y30185-002	Turntable	
72	Y40444-001	T.T. Covering Ass'y	
	MD1032	Cartridge	
	DT-36	Stylus	

NOTICE: The parts in above list are recomendable to keep in stock as spare parts.
In case if the parts not listed is needed, please write the drawing No. in the order form referring to Exploded View of Record Player Mechanism in page 21 when you order.

Cassette Unit

Dwg. No.	Parts No.	Parts Name	Description
	*Y40493-001	Rec. Arm Ass'y	
	*YWS30001-004	Spring	for Rec. Arm
	*YWS30001-008	Tension Spring	for REC/PB Switch
	YXF40018-001	Brake Pipe Ass'y	
	Y40580-001	Brake Shaft	
	TER267508-02	"O" Ring	for Brake Shaft
	Y40502-001	Holder Spring	
	Y00084-001	Muting Switch	
	Y40497-001	Kick Arm	
	YWS30001-005	Spring	for Kick Arm
	Y40495-001	Eject Arm	
	Y30229-002	Spring	for Eject Arm
	*Y40572-001	Pulley	

How to Remove Cassette Door Holder

1. Open the door by depressing "EJECT" knob.
2. Take off the brake shaft arm connected with the door at left-hand of the cassette compartment.
3. Depress the opened door toward you so as to open it further.

Notice: Check Point of Door Trouble
If opening or closing the door is not smooth, check the following points.

1. Whether the small hole of brake pipe (inside) is choking with something like dust.
2. Whether grease on brake shaft is running out.
3. Whether "O" ring of the shaft is deforming.

Removal of Cassette Mechanism

For removing cassette mechanism parts, do it in the following way referring to "Exploded View of Cassette Mechanism" on page 22.

(1) Regarding the parts to which the belt is fitted, take off the belt first.
(2) Regarding the parts to which the spring is hooked up, take off the spring first.
(3) Regarding the other major parts, remove screw or "E" ring which fixes the parts to be removed.

CAUTION:

1. As for rotation parts such as reel disk etc., pull it out vertically from the shaft.
2. Be careful not to soil belt or rubber parts in oil etc.

Check Point After Replacement of Rotation Parts

1. Pinch Roller Pressure

- It must be within 380~580 g/cm.
- The roller continues to rotate after being rotated by the finger.
- The roller surface contacting the capstan must be vertical.

2. Flywheel

- A little thrust clearance exists between flywheel shaft bearing and special washer.
- The capstan is clean, correctly centered, and provides quiet rotation.

3. Take-up Torque

It must be within 40~70 g/cm.
If torque is out of the specified range, take the following measures.

1) Clean take-up belt, surfaces of idler and reel-disc.
2) Change the position of the spring holder in the clutch pulley. (Refer to Fig. 14)
3) Nevertheless, if the standard torque is not obtained, replace take-up clutch arm ass'y.

4. Fast Forward and Rewind Torque

The standard torque should be over 60 g/cm.
If the torque is less than the specified range, take the following measures.

1) Clean take-up belt, rubber part of reel-disc, and all parts to which the belt gets in contact.
2) Change the position of the spring holder in the F.F. idler. (Refer to Fig. 14)
3) Adjust or replace the springs concerned.
4) In case the rubber parts was worn out, replace to new one.

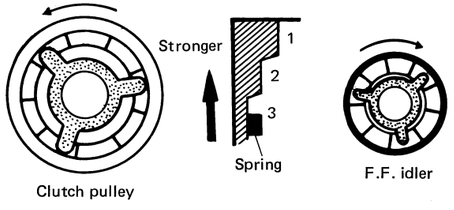

Fig. 14

Note: To adjust the spring holder, raise it up with a screwdriver and shift to higher position by turning. The torque is the higher the stronger.

Head Replacement and Adjustment

If either of Recording/PB head and Erase head shows low performance caused by wear, broken wire or excessive magnetization, it should be replaced. They can be removed by loosening screws with following procedure. After replacement, adjust azimuth of head.

Azimuth Adjustment

Step

1. Connect INPUT jack of V.T.V.M. to LINE OUT of REC/PB socket.
2. Play back the standard tape (Full Track or JVC Test Tape VTT658 10kHz) for azimuth (angle adjustment).
3. Adjust screw ② so that indication of V.T.V.M. will become max.
   When standard tape for azimuth adjustment is not available, play a music cassette tape.
   Make treble sound optimum with turning the screw ②.
4. After this adjustment, the screw ② should be locked with a bond.
   If necessary, adjust playback level, recording bias current, and trap etc.

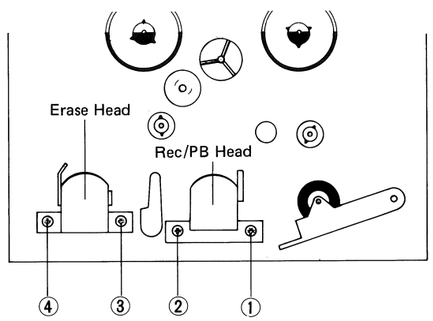

Fig. 15

Cassette Deck Circuit Board Adjustment

Item of Adjustment

1. Dolby Noise Reduction Level
2. Level meter
3. Playback Gain
4. Recording bias current
5. Recording current

Equipment and measuring instruments to be used for adjustment

1. VTVM (measuring AC in milivolts)
2. Oscilloscope
3. Oscillator
4. Attenuator
5. Frequency counter
6. Standard tape VTT-664 (1kHz 16mM/mm)
7. C-60 Normal sub-standard tape
8. 100Ω Resistor

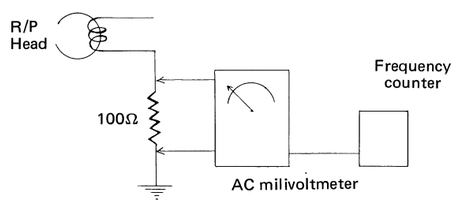

Fig. 16

Unit Parts

Dwg. No.	Parts No.	Parts Name	Description
External Parts			
Front Panel Ass'y			
	***Y10081-001D**		
	*Y10081-001	Front Panel	
	*Y20068-001	Window Screen	
	*Y10083-002	Front Plate	for Control
	*Y20069-001	Fitting	
	*Y40554-001	Switch Plate	for Beat Cut
Dust Cover Unit			
	Y10065-003	Dust Cover	
	TFB291455-01	Lock Plate	
	SDSP4008RS	Screw	
Side Panel Unit			
	Y20058-001	Panel (Wood)	
	WNS4000N	Washer	
	SDSP4008RS	Screw	
Cassette Door Holder Ass'y			
	***YFA0171H**		
	*Y40563-001	Holder Ass'y	
	*Y40564-001	Holder Plate	
	*Y40565-001	Lid Cover	
	*Y40577-001	Socket Head Screw	
	Q03093-601	Washer (Plastic)	
Cassette Grille Ass'y			
	***YFA0171G**		
	*Y30254-001	Grille	
	*Y40566-001	Plate	
Cassette Push Buttons			
	*TJK338301-05	Knob	for FF, REW, PLAY, PAUSE
	* 〃 -06	〃	for REC
	* 〃 -07	〃	for STOP
Internal Parts			
Power Transformer			
	*Y00120-001	P. Transformer	for 33R
	*Y00120-002	〃	⚠ for 33RA
Power Cord Ass'y			
	QMP7600-250	P. Cord	for 33R
	*QMP2560-244	〃	⚠ for 33RA
	QHS3876-252	Strain Relief	⚠ for 33R/RA
Fuse			
	QMF51A2-R50L	Fuse	⚠ for 33R/RA
	〃 -R80L	〃	⚠ 〃
	〃 -2R5L	〃	⚠ 〃

Ref. No.	Parts No.	Parts Name	Description
R379	QRG019J-470	OMF Resistor	1W
R380	QRG029J-331	〃	2W
VR301,302	QVP3A0B-052A	V. Resistor	
VR303,304	〃 -054A	〃	
VR305,306	〃 -024A	〃	
VR307,308	*QVP3A0B-025A	〃	
VR309	*QVZ3110-005	〃	1kΩ
	*QSSC201-104	Slide Switch	
	Y30221-003	Plug Ass'y	
	〃 -008	〃	
Dolby NR Section			
IC401,402	NE545B	I.C.	
C427,428	QEW61CA-227	E. Capacitor	220μF 16V
C429	QEW61EA-107	〃	100μF 25V
L401,402	KM10D-19B	Filter	
L403,404	〃 -85B	〃	
D401,402	OA91	Ge. Diode	
R427	QRG026J-181	OMF Resistor	2W
VR401,402	*QVP3A0B-024A	V. Resistor	
Control Amp Section			
IC 501	*HA1452W	I.C.	
X501,502	2SC1345E	Si. Transistor	
C521	QEW41VA-477	E. Capacitor	470μF 35V
C522	QEW61EA-107	〃	100μF 25V
R525	QRG029J-821	OMF Resistor	2W
R526	QRG019J-471	〃	1W
VR501	*QVZ1709-001	V. Resistor	for Volume
VR503,504	*QVG5A2A-054V	〃	for Level
VR505	*QVG5A2W-515V	〃	for Balance
VR507	*QVZ1709-002	〃	for Tone
S501	*QSR0090-001	Rotary Switch	for Source
	Y30221-003	Plug	To Meter
	〃 -005	〃	To Cassette, Tuner
	〃 -006	〃	To Tuner
	〃 -009	〃	To Cassette
Power Amp Section			
IC1,2	*HA1350	I.C.	
X1	*2SC1061C	Si. Transistor	
C9,10	*QEW61CA-477SV	E. Capacitor	470μF 16V
C21,22	QEW41EA-477S	〃	〃 25V
C27	QEW71VH-228M	〃	2200μF 35V
C40	QEW41CA-108S	〃	1000μF 16V
C41,42	ECET35R332SW	〃	3300μF 35V
D2~D17	10E1-B	Diode	
ZD1	*RD22E(C)	Ze. Diode	
R15,16,22	QRZ0044-470	Fusible Resistor	⚠
R17,18	〃 -100	〃	⚠
R20,21	QRZ0045-100	〃	⚠ for Meter, Needle
R23,24	QRG019J-151	OMF Resitor	1W
	QSP0228-001	Push Switch	for Speaker
	YMG30042-001	Fuse Holder	for Lamp
	YMG30042-002	Fuse Holder	for Main
	Y30221-003	Plug (3P)	for Cassette Motor
	〃 -006	Plug (6P)	
Power Switch Section			
	QSP2111-011	Push Switch	
C1,C2	QFZ9006-223	M.P. Capacitor	

NOTICE: The parts in above list are recommendable to keep in stock as spare parts.
In case if the parts not listed is needed, please write the symbol No. in the order form referring to Diagram in page 13 ~ 16 when you order.

1. **DOLBY N.R. Level**
   1. Set SOURCE SELECT switch to "AUX".
   2. Set DOLBY N.R. switch to "OFF".
   3. Set the deck in recording mode.
   4. Apply 1kHz signal of proper level (0.5V approximately) to "AUX" input terminal.
   5. Adjust the front REC VOLUME so that the signal level will be -25 dBm at the terminals of VR401 (L-ch) and VR402 (R-ch) respectively. (Refer to Fig. 17)
   6. Finally adjust VR401 and 402 so that the level will be -2.5 dBm at the Dolby T.P. (L) and (R).

2. **Adjustment of Level Meter**
   After adjustment of Dolby Noise Reduction Level was completed, adjust the VR303 (L) & VR304 (R) so that the level meter indicates Cal (+3VU). (Refer to Fig. 17)

3. **Playback level**
   1. Set SOURCE SELECT switch to "TAPE".
   2. Set EQUALIZER switch to "NORMAL".
   3. Set DOLBY N.R switch to "OFF".
   4. Play the reference tape VTT-664, (1kHz), and adjust VR301 (L-ch) and VR302 (R-ch) so that the level meter will indicate 0VU.

4. **Adjustment of Recording bias and frequency**
   1. Connect a resistor 100Ω to the earth side terminal of R/P head in recording state, and connect AC milivoltmeter to the both terminals of the resistor. (Refer to Fig. 16)
   2. While changing the bias switch, adjust so that the specified current will be obtained. The adjustment should be made from "CHROME".

	Place to be adjusted	Bias Current
CHROME	VR307 (L-ch) VR308 (R-ch)	550μA (55mV/100Ω)
NORMAL	VR 309 (L,R-ch)	400μA (40mV/100Ω)

   3. Regarding bias frequency, adjust T301 so that 57kHz will be obtained when the front BEAT CUT Switch is set to 1.

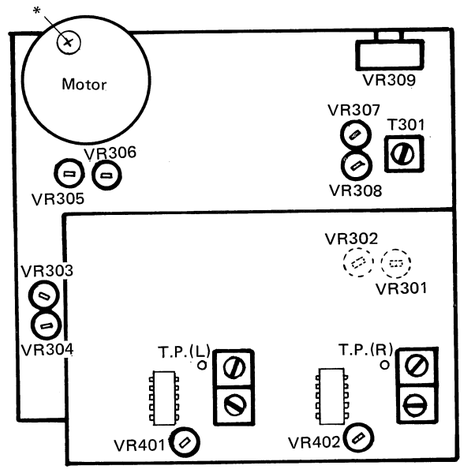

Fig. 17

5. **Adjustment of Recording signal current**
   1. For this adjustment, it is necessary that the swing angle of the level meter and playback sensitivity are correctly adjusted previously.
   2. Set the equalizer switch and bias switch to "NORMAL".
   3. In recording state, apply 1kHz signal of proper level (0.5V approximately) to "AUX" input terminal, and adjust the front Recording volume so that the level meter will indicate 0VU.
   4. In this state, repeating the recording and playback, adjust VR305 (L-ch) and VR306 (R-ch) until the level meter indicates 0VU.

Tape speed
Standard speed: 3,000Hz ±2% (at playing a 3,000Hz test tape)
If not as specified, insert your driver in hole on the motor upside and adjust a semi-VR for speed control in the motor case.
(Fig. 17 *)

YH1001-C Power Amp. and Headphone and Meter Lamp, Power Switch Circuit Board

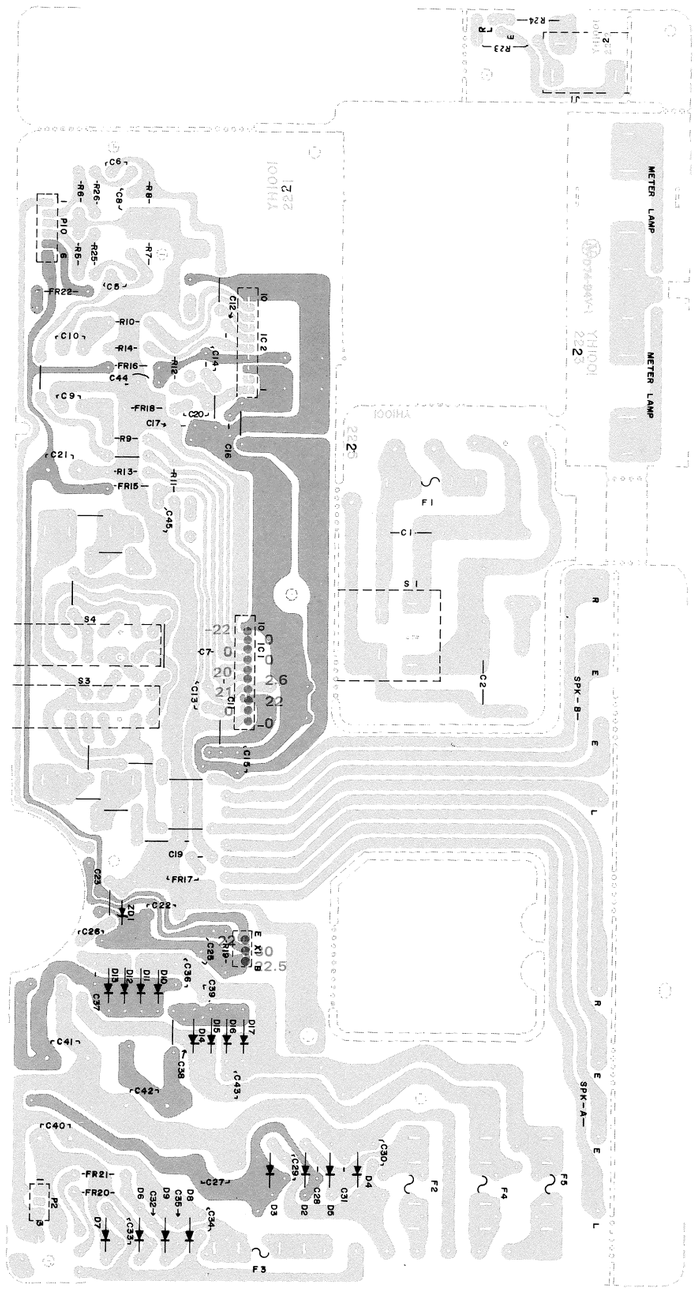

Note: ● Indicated voltages are measured with a 20kΩ/V tester.
● The part indicated with ▬ is of +B voltage.

Fig. 25

FM IF and discriminator alignment

Equipment required : 10.7MHz Sweep Generator with Oscilloscope
Input terminal : C in Fig. 20
Output terminal : D in Fig. 20
Adjust at T101 and T102 as shown in Fig. 19

FM RF alignment

Equipment required : Standard Signal Generator
Modulation monaural (1000Hz 40kHz/Div) stereo
(MAIN 40kHz/Div, PILOT 8kHz/Div)
Output impedance 300 ohms
Input terminal : Refer to the following table.
Output terminal : Speaker terminal

Step	Band	Input Signal		Place to be aligned	Set V. Capacitor to
		Frequency	Given to		
1	FM	87.5MHz	FM antenna terminal	L104	Maximum
2		109MHz		C112	Minimum
3		Repeat the Step 1 & 2 to get the best point of adjustment.			
4		88MHz	FM antenna terminal	L101, L102	88MHz Signal
5		108MHz		C102, C105	108MHz Signal
6		Repeat the Step 4 & 5 to get the best point of adjustment.			

PLL MPX VFO alignment

Connect a frequency counter to E in Fig. 20 and adjust the VR183 until 76kHz is obtained.

Note: 1. Set the MUT/MODE switch to stereo position.
2. Give monaural non-moduration signal of 1mV to ANT terminal.

Separation alignment

Adjust the VR197 so that left and right channel separation will be maximum.

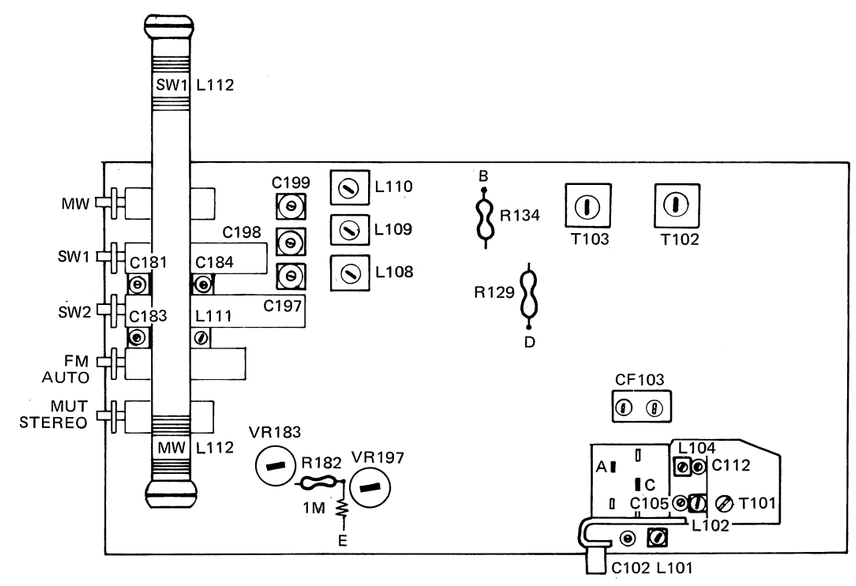

Fig. 20

Block Diagram

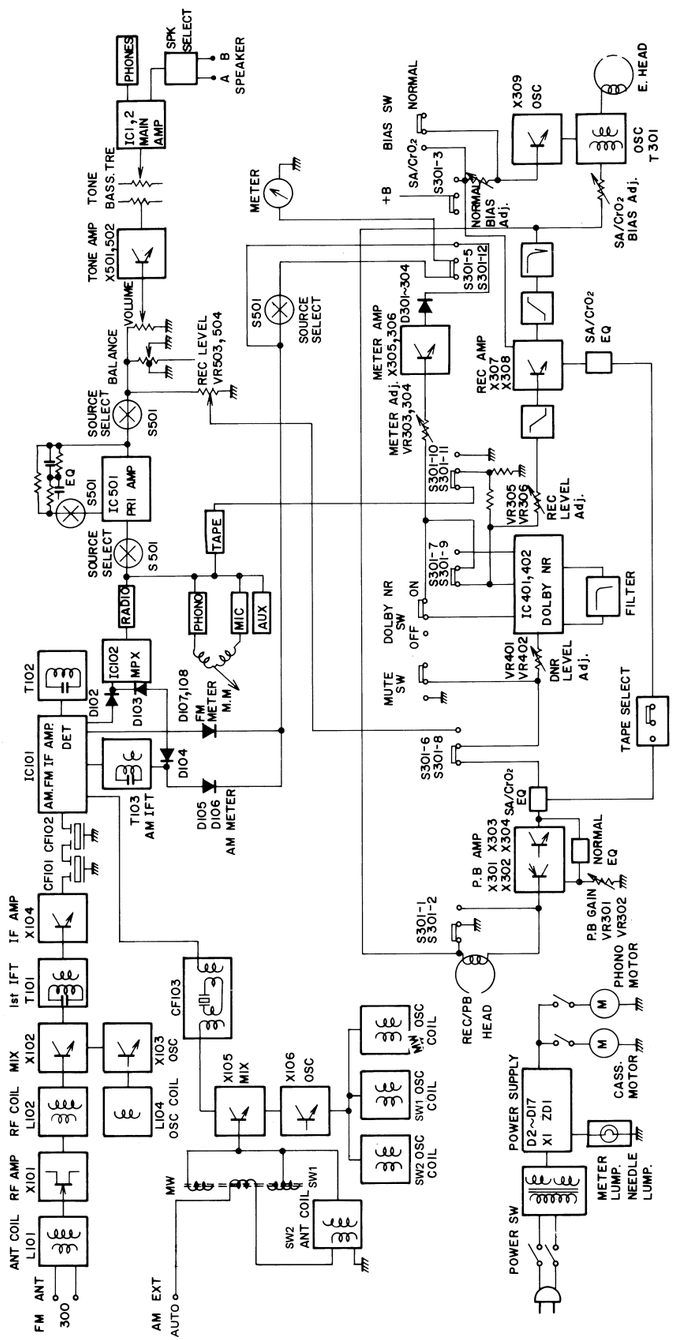

Fig. 21

YH2002-A Cassette Amp. and Dolby and Tape Selector, Beat Cut Circuit Board

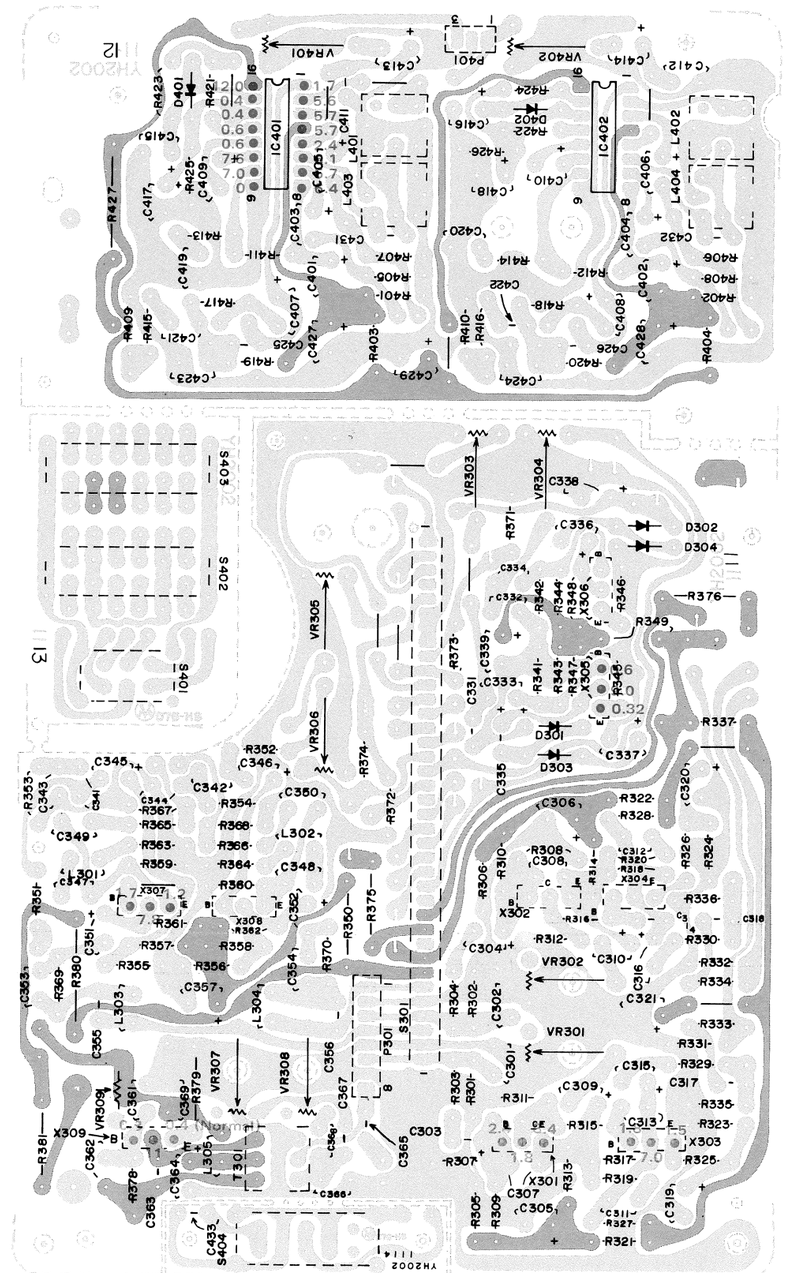

Fig. 24

YH2001-A Control Amp. and Mic Jack and Aux, L.E.D. Circuit Board

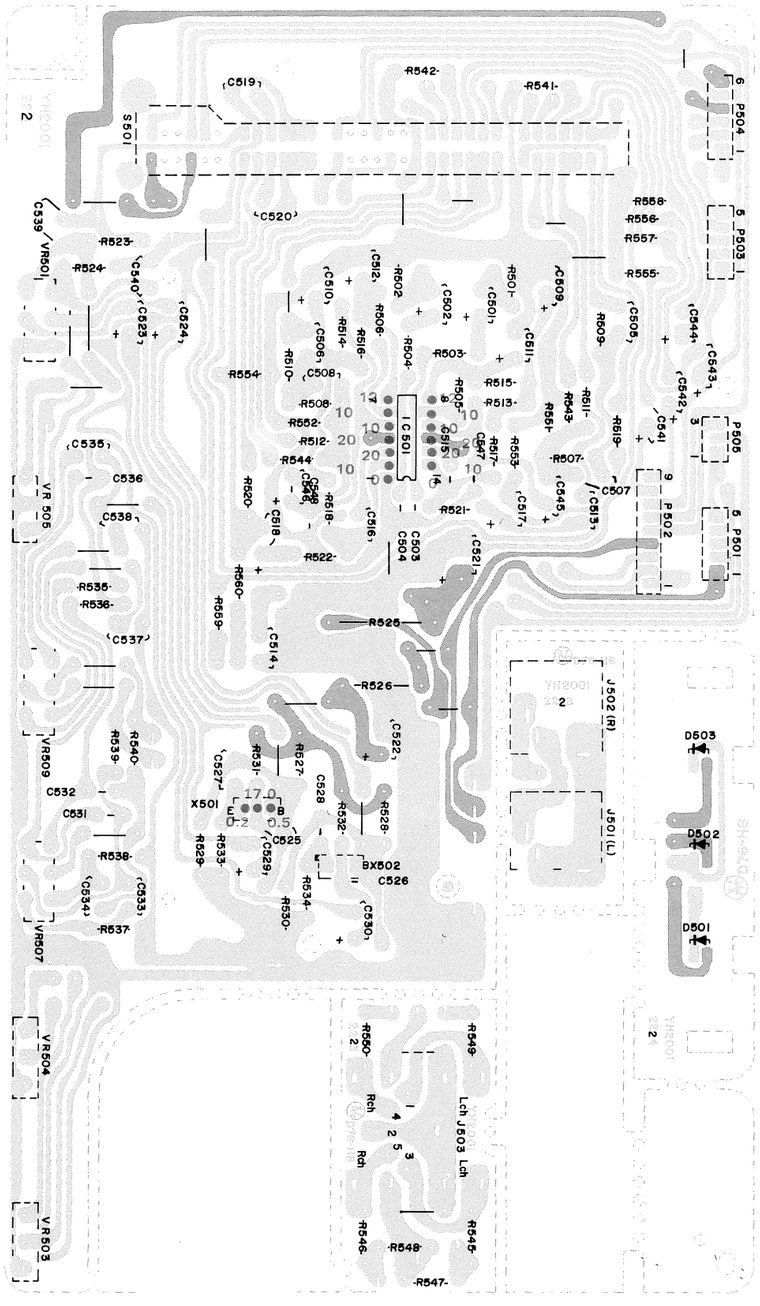

Note:
- Indicated voltages are measured with a 20kΩ/V tester.
- The part indicated with ▬ is of +B voltage.

Fig. 23

Circuit Board Diagrams

YH1002-B Tuner Circuit Board

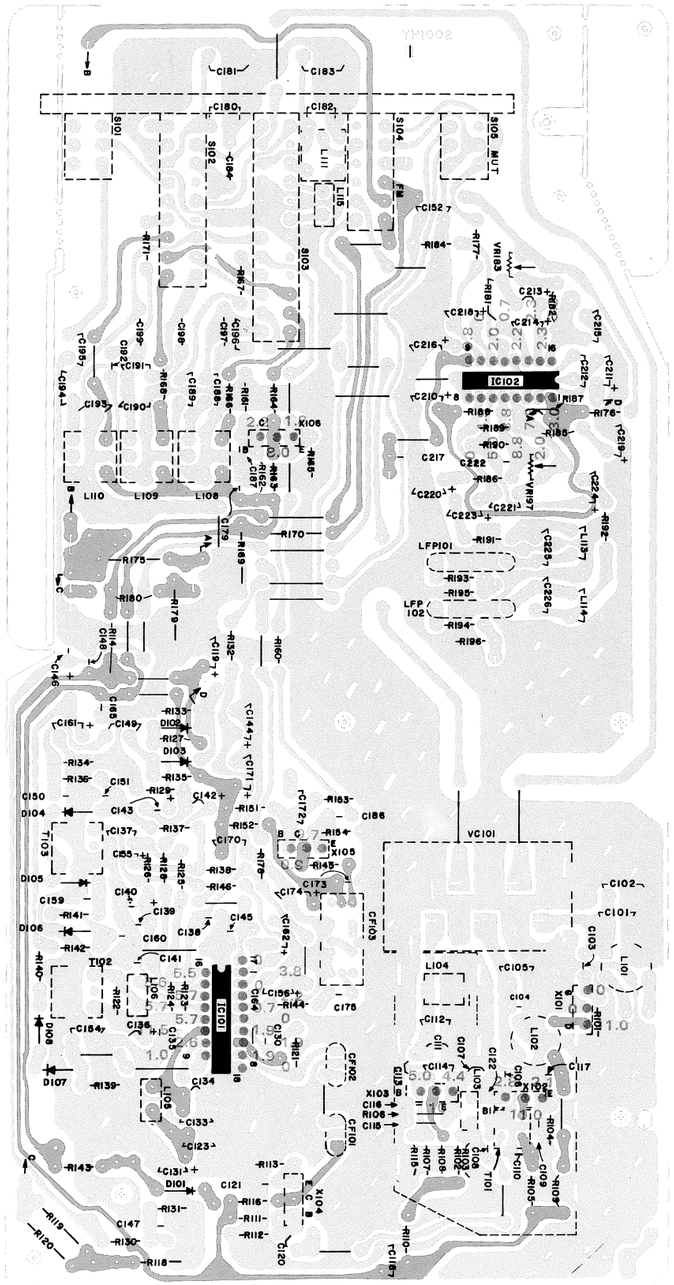

Block Diagram

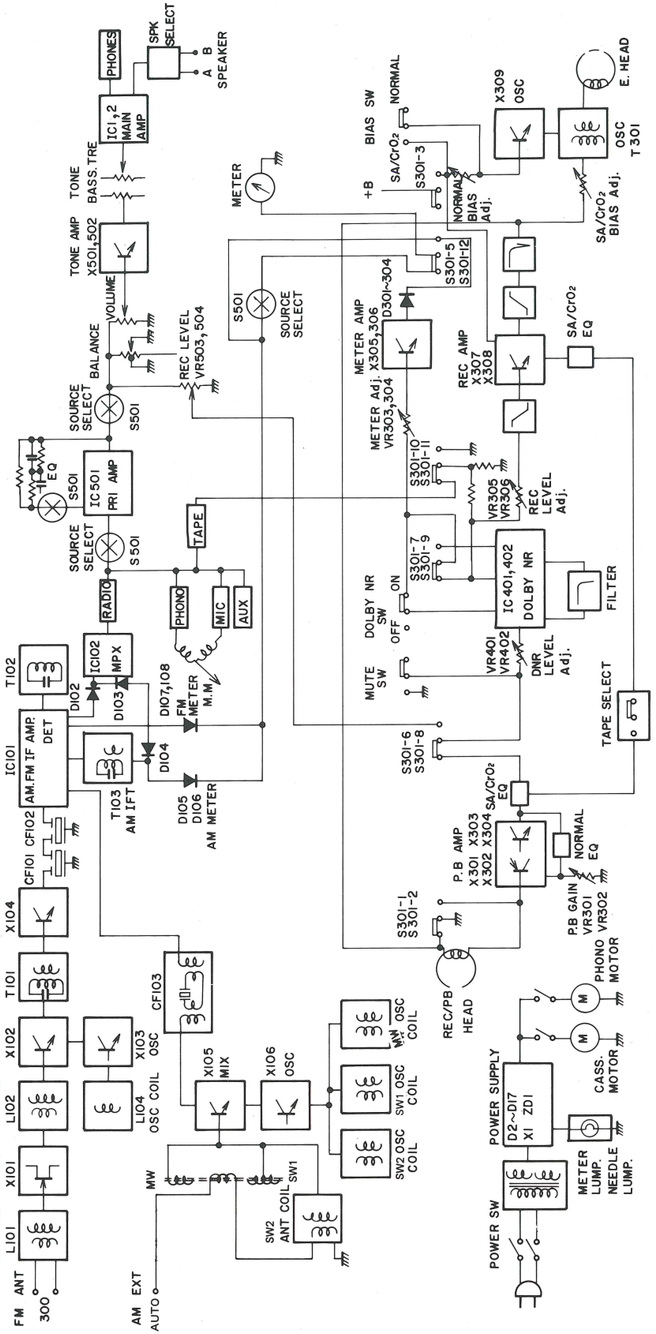

Fig. 21

YH2002-A Cassette Amp. and Dolby and Tape Selector, Beat Cut Circuit Board

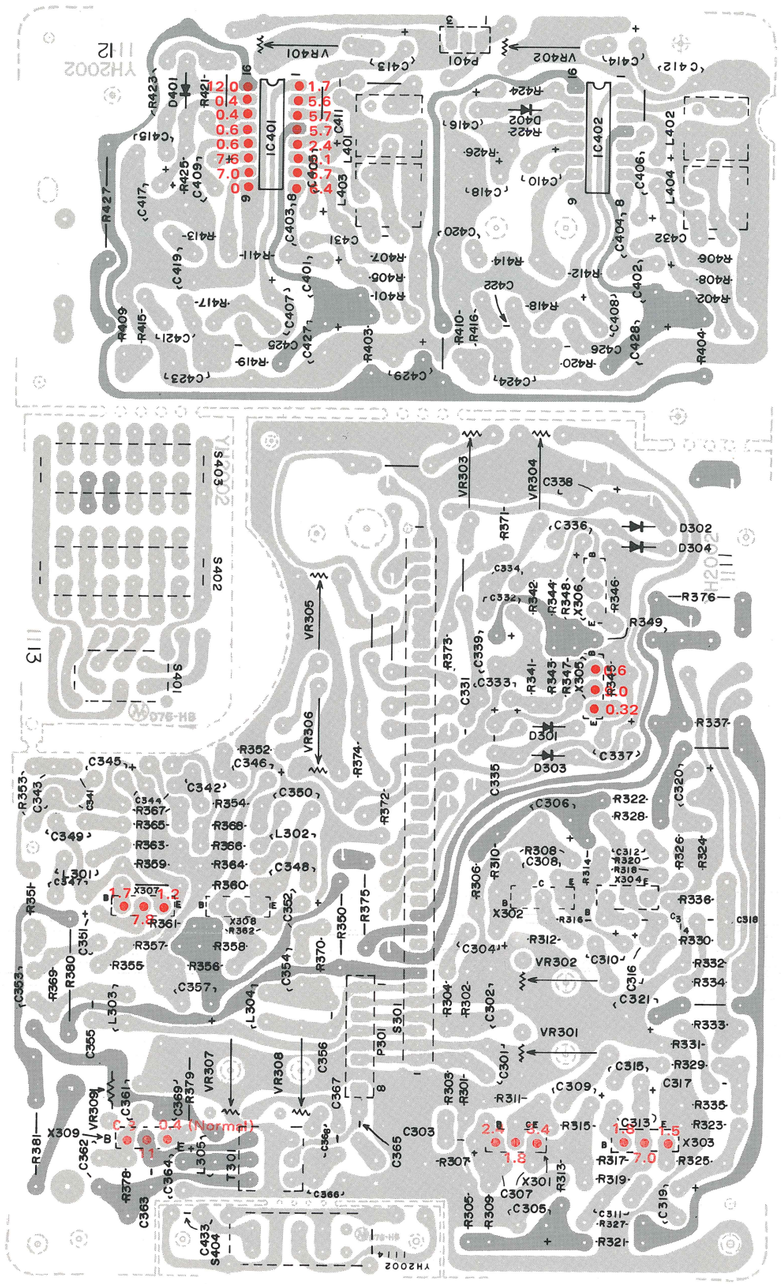

Fig. 24

YH1001-C Power Amp. and Headphone and Meter Lamp, Power Switch Circuit Board

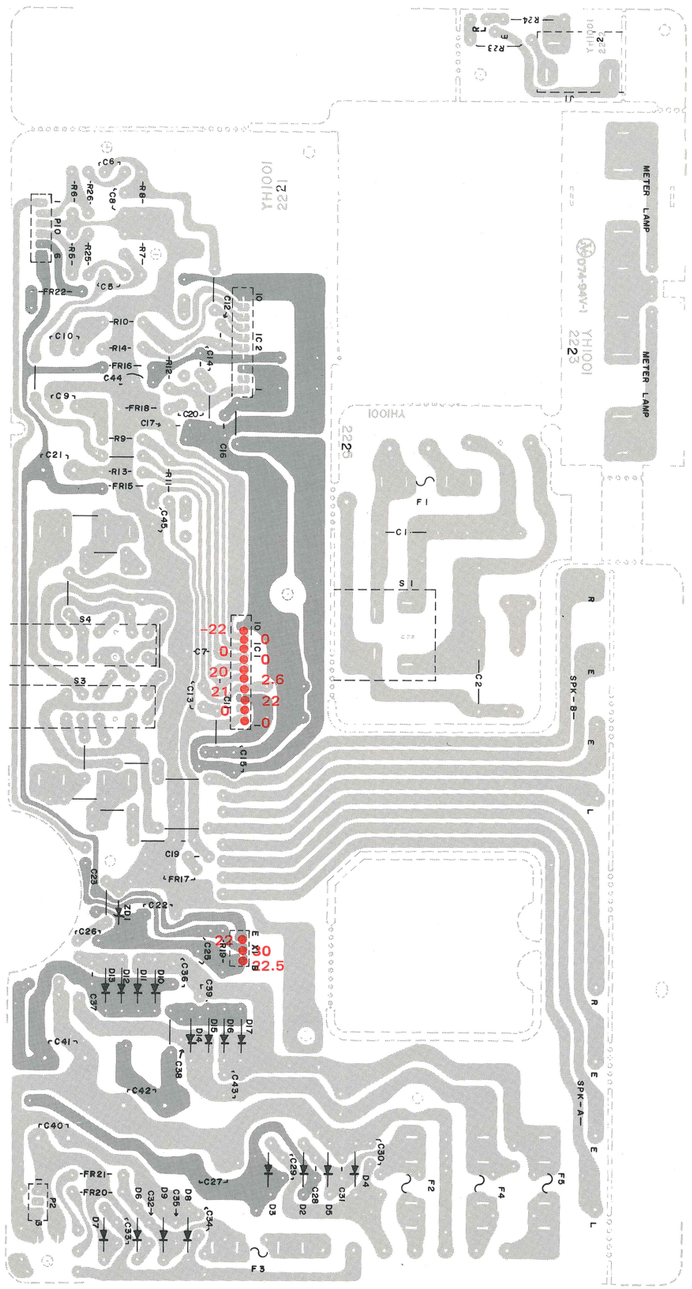

Note: ● Indicated voltages are measured with a 20kΩ/V tester.
● The part indicated with ▬ is of +B voltage.

Fig. 25

FM IF and discriminator alignment

Equipment required : 10.7MHz Sweep Generator with Oscilloscope
Input terminal : C in Fig. 20
Output terminal : D in Fig. 20
Adjust at T101 and T102 as shown in Fig. 19

FM RF alignment

Equipment required : Standard Signal Generator Modulation monaural (1000Hz 40kHz/Div) stereo (MAIN 40kHz/Div, PILOT 8kHz/Div) Output impedance 300 ohms
Input terminal : Refer to the following table.
Output terminal : Speaker terminal

Step	Band	Input Signal		Place to be aligned	Set V. Capacitor to
		Frequency	Given to		
1	FM	87.5MHz	FM antenna terminal	L104	Maximum
2		109MHz		C112	Minimum
3		Repeat the Step 1 & 2 to get the best point of adjustment.			
4		88MHz	FM antenna terminal	L101, L102	88MHz Signal
5		108MHz		C102, C105	108MHz Signal
6		Repeat the Step 4 & 5 to get the best point of adjustment.			

PLL MPX VFO alignment

Connect a frequency counter to E in Fig. 20 and adjust the VR183 until 76kHz is obtained.

Note: 1. Set the MUT/MODE switch to stereo position.
2. Give monaural non-moduration signal of 1mV to ANT terminal.

Separation alignment

Adjust the VR197 so that left and right channel separation will be maximum.

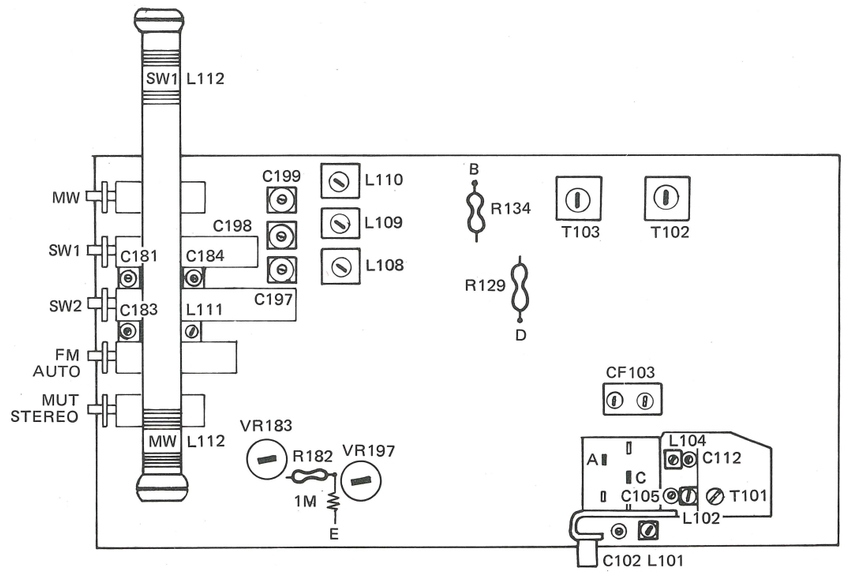

Fig. 20

Circuit Board Diagrams

YH1002-B Tuner Circuit Board

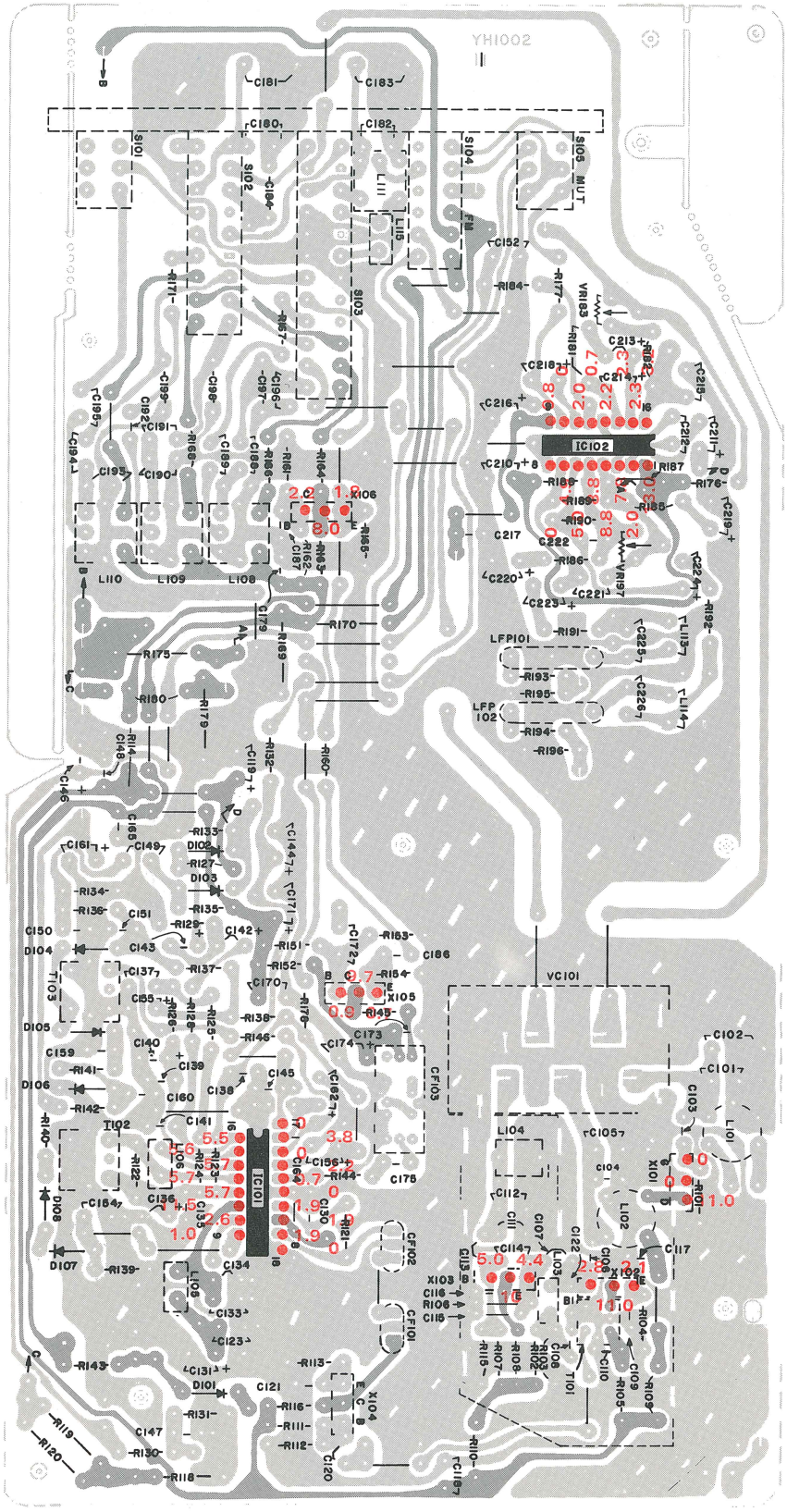

Note: ● Indicated voltages are measured with a 20kΩ/V tester.
● The part indicated with ▬ is of +B voltage.

Fig. 22

YH2001-A Control Amp. and Mic Jack and Aux, L.E.D. Circuit Board

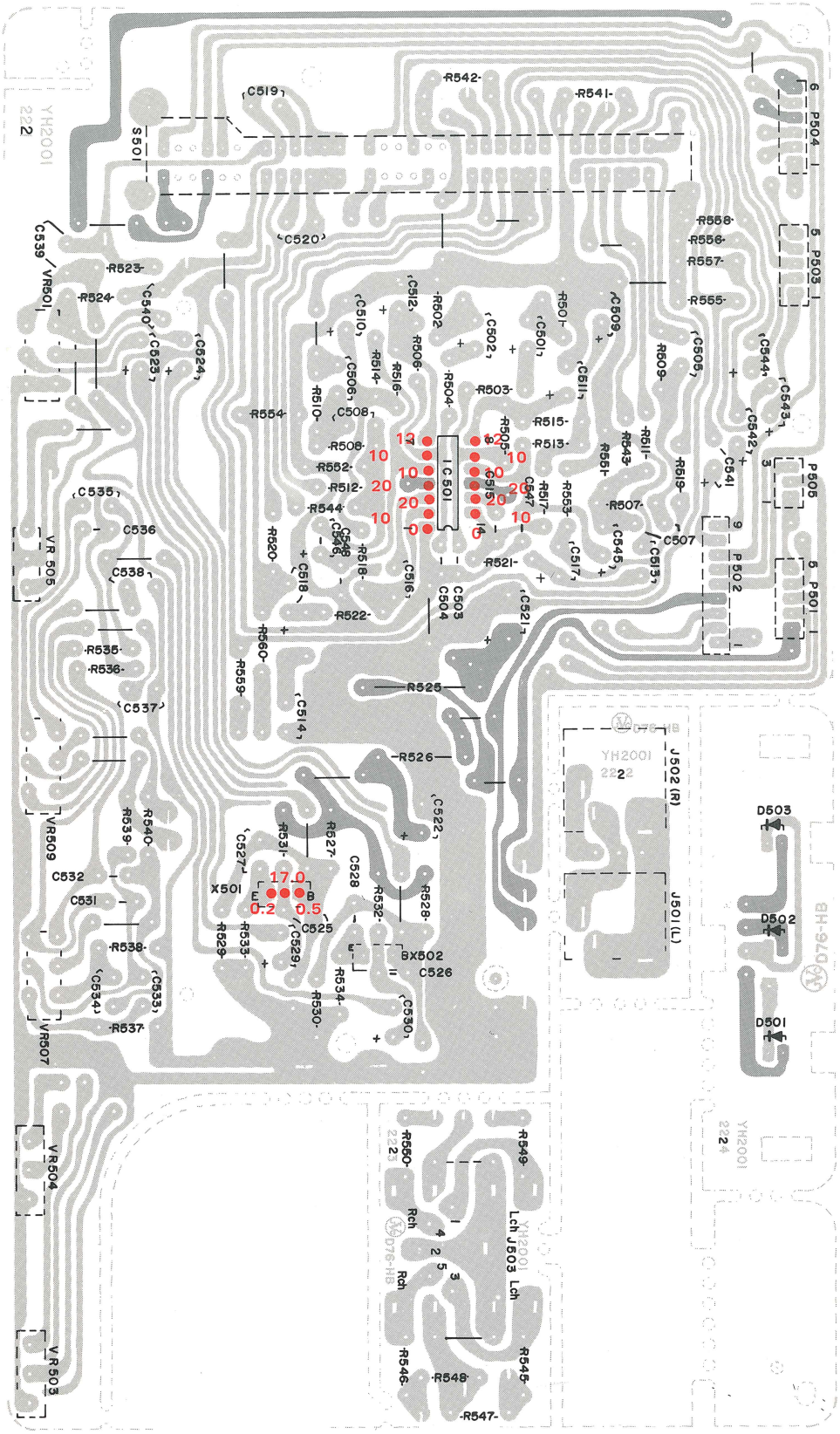

Note: ● Indicated voltages are measured with a 20kΩ/V tester.
● The part indicated with ▬ is of +B voltage.

Fig. 23