SANYO

MODEL MC-2

POCKET CORDER

compact all-transistor tape recorder

Service Manual

SPECIFICATIONS

TRANSISTOR COMPLEMENT

1 × 2SB186	1st amplifier
1 × 2SB186	2nd amplifier
2 × 2SB187	power amplifier

THERMISTOR USED

1 × SDT-20	temperature compensator

OUTPUT POWER

undistorted	100 mW
maximum	250 mW

BATTERY USED

four $1\frac{1}{2}$-volt penlight batteries (6-volt)

CURRENT DRAIN

minimum	45 mA
maximum	140 mA

BATTERY LIFE

approx. 15 hours

LOUDSPEAKER

2″ permanent dynamic type

RECORDING SYSTEM

DC bias

ERASING SYSTEM

permanent magnetic (saturation)

RECORDING TRACK

double tracks

RECORDING HOURS

maximum	10 minutes (single track)
maximum	20 minutes (double tracks)

REWIND HOURS

within 4 minutes

TAPE SPEED

continuous control

CABINET DIMENSIONS

$5\frac{1}{2}'' \times 3\frac{5}{8}'' \times 2\frac{1}{8}''$

NET WEIGHT

$1\frac{3}{4}$ lbs approx. (incl. batteries)

SANYO ELECTRIC CO., LTD.

MOTOR & BATTERY ASSEMBLY

(Figure 1)

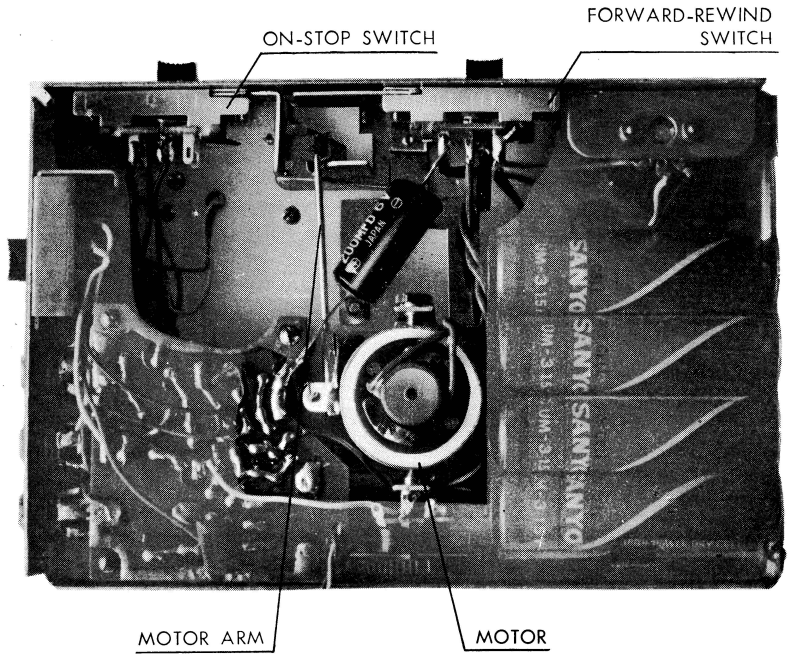

(Figure 2)

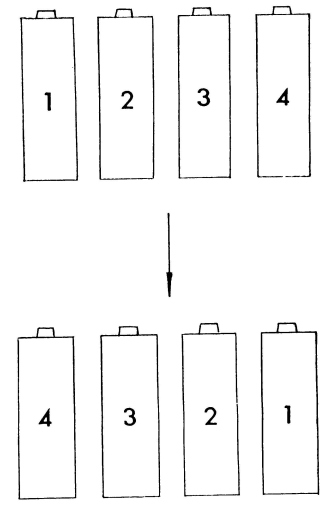

Reload batteries in above order when lack of power.

ERASING HEAD AND RECORDING & REPRODUCTION HEAD ASSEMBLY

(Figure 3)

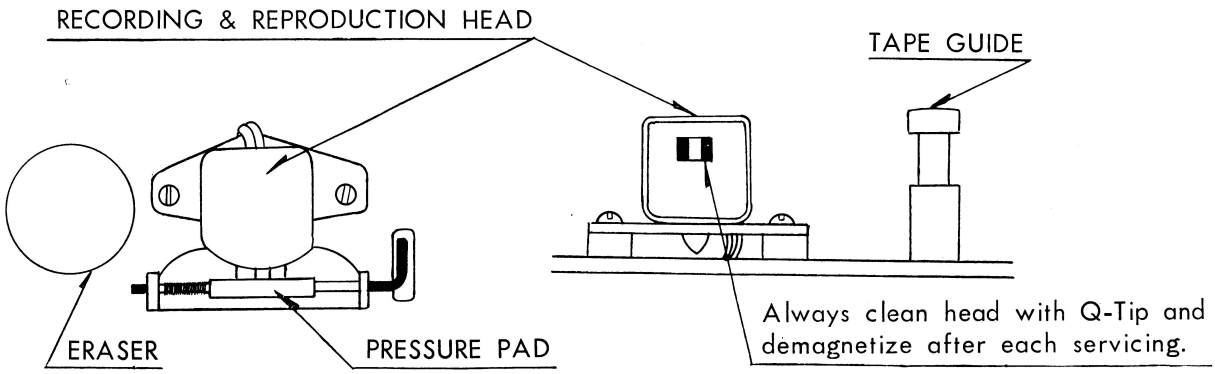

REEL DISK ASSEMBLY

(Figure 4)

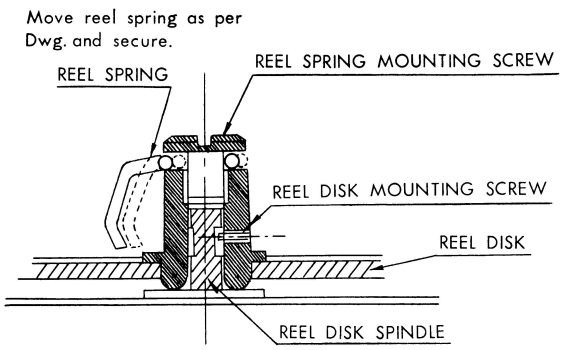

DRAWING WHEN COMPLETELY ASSEMBLED

(Figure 5)

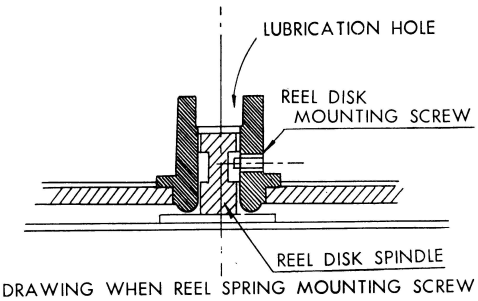

DRAWING WHEN REEL SPRING MOUNTING SCREW REMOVED FOR LUBRICATION

Printed in Japan

CIRCUIT DIAGRAM

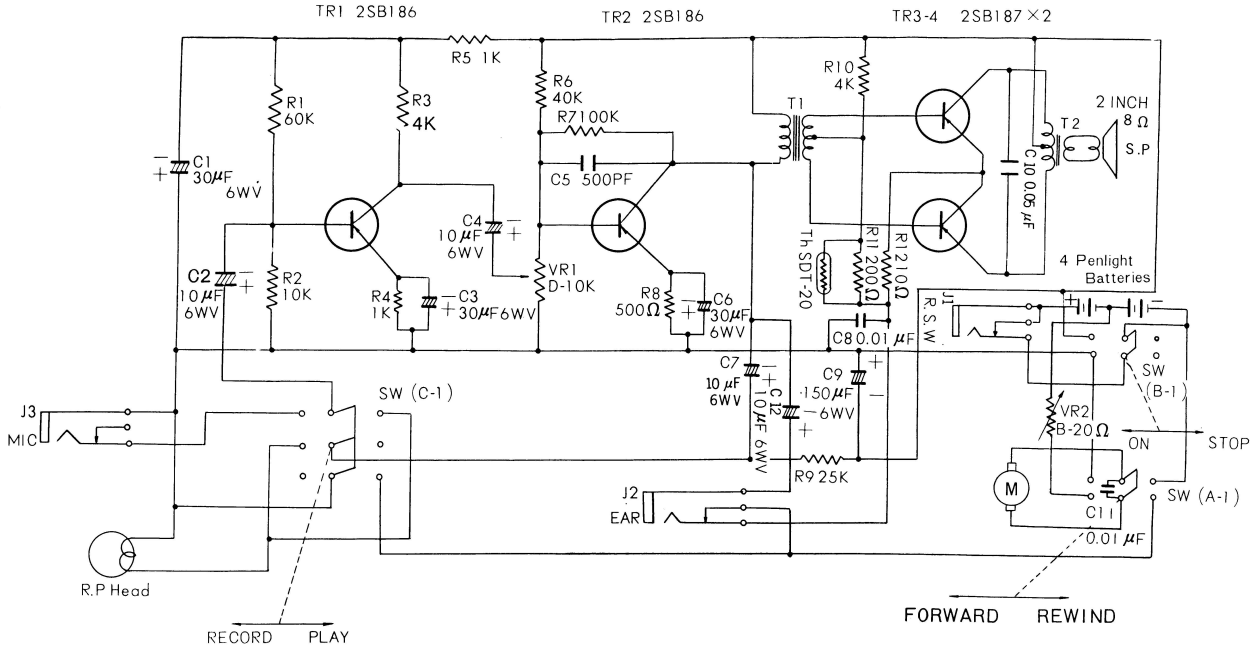

INTER-PARTS CONNECTION

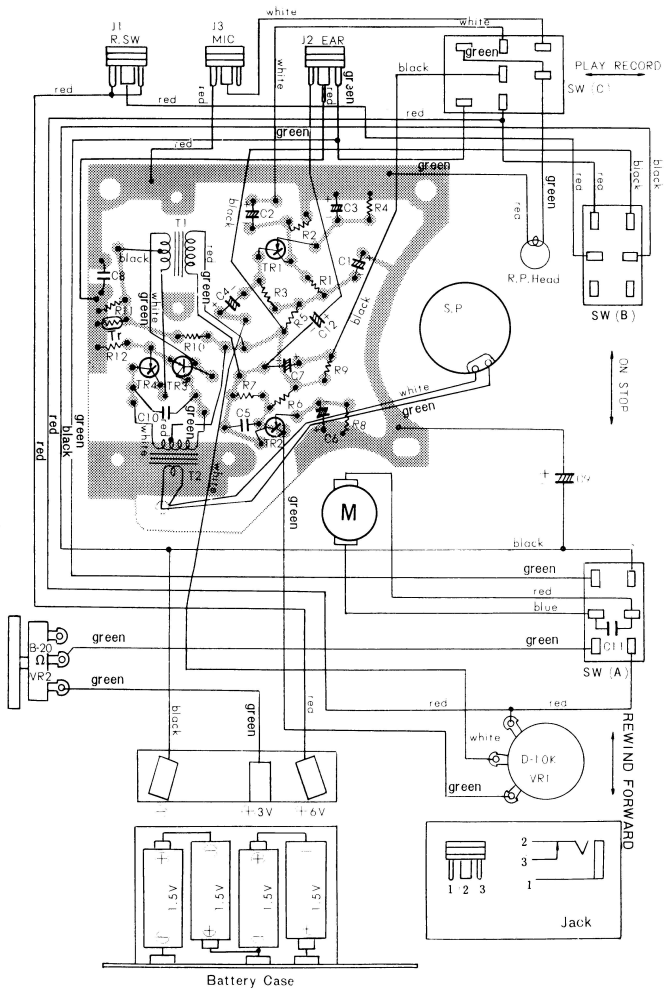

HOW TO REPAIR

This tape recorder will fine-perform recording or playback in normal condition. If not, see followings.

TROUBLE	CAUSE	INSPECTION	REPAIR
Tape reel does not move.	Bad contact of motor brush.	Use tester as ohm-meter.	Replace the motor with new one.
	Bad soldering of leadwire.		Resolder the bad point.
	Bad contact of battery terminal.	Check the voltage at terminal of battery holder.	Roll batteries 2 to 3 rounds. Turn battery terminal inside. File battery terminal.
	Batteries drain.		Replace batteries in different order as fig. 2 or with new ones.
	Bad contact of switch.	Use tester as ohmmeter (Take out batteries in the case).	Replace the switch with new one.
	Slip of motor shaft.	Check if any oil is on the rubber of reel disk.	Clean oily rubber with dry cloth or benzene.
	Bad switch mechanism.	Motor shaft does not contact with reel disk.	Adjust motor arm as fig. 1 so motor shaft will contact with the edge of reel disk with well balanced pressure.
Tape does not run at constant speed.	Bad contact of motor shaft and reel disk.	Check motor shaft pressure against reel disk.	
	Distortion of reel disk.	Rotate reel disk.	Replace the reel disk with new one.
	Lubeoil-less of bearings.		Lubricate with 1 or 2 drops of silicon oil or very light machine oil as fig. 5 (Be sure not to drop any oil on rubber or motor shaft.)
	Badness of motor.	Motor does not rotate at constant speed.	Replace the motor with good one.
	Bad tape winding.	Tape is ovally wound up on take-up reel.	Setting tape, be sure to insert an end of tape into groove on drum of take-up reel and turn it 2 to 3 rounds to wind tape correctly and firmly.
Tonal quality distorts.	Dusts on recording head.	Remove head housing and check the head.	Clean the head with dry cloth or benzene. (fig. 3).
	Tape does not closely contact with the head.	Pad does not press tape parallel with the head.	Adjust pad (felt, spring, fixture) to bring back it to normal pressure condition.
Sound has extreme noise.	Cracks, stains, carls and folds of tape.	Check the tape.	Use fresh tape (tape life; about 1,500 times of recording and erasing).
	Badness of volume control, resistors, transistors and/or motor.	Turn volume control knob in either direction on recording or reproducing. Makes a noise when tape recorder is given a shock. Hum of motor is heard.	Replace them with good one.
Recording is not done by microphone trouble.	Breaking of microphone leadwire.	Use earphone instead of microphone.	Replace the leadwire with new one.
	Bad contact of microphone plugging.	Reinsert the plug into jack again and again.	Replace or repair microphone jack.
Tape reel does not tightly fit spindle.	Badness of reel spring shape and position.	Tape reel comes off spindle too easily.	Adjust reel spring as fig. 4 by loosening fixing screw.
		Tape reel too tight on spindle.	

MAIN PARTS LOCATION

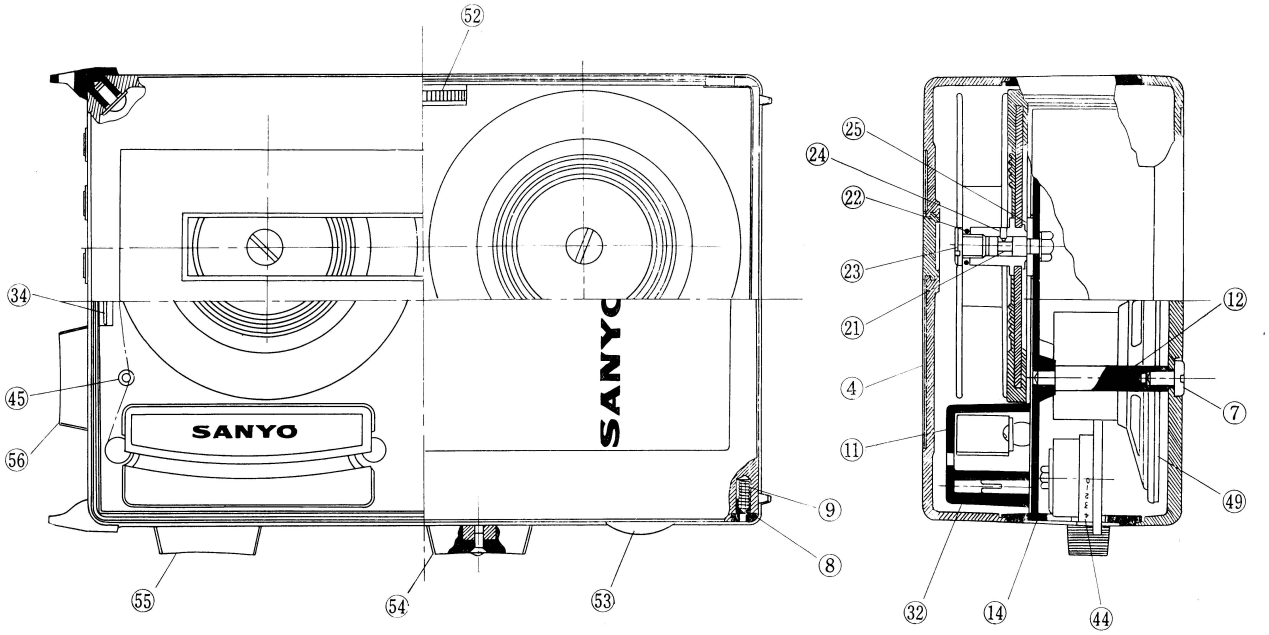

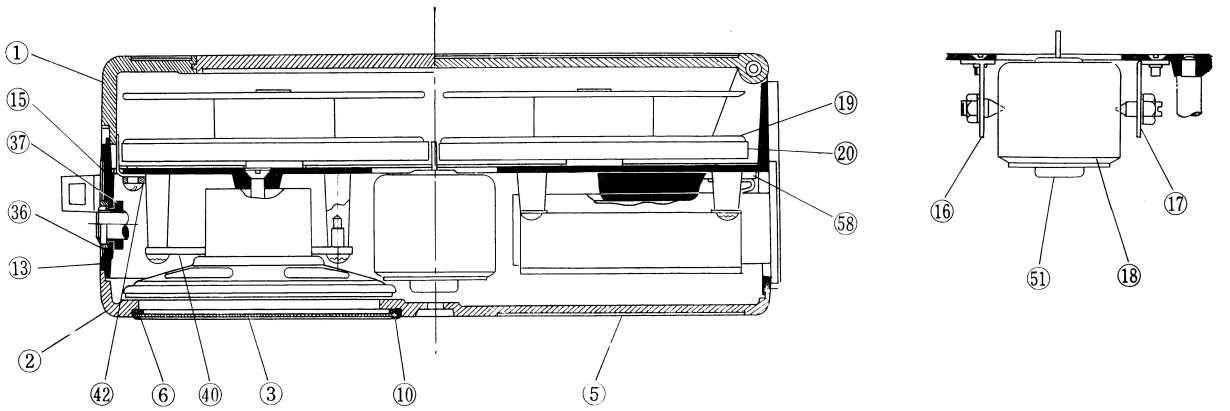

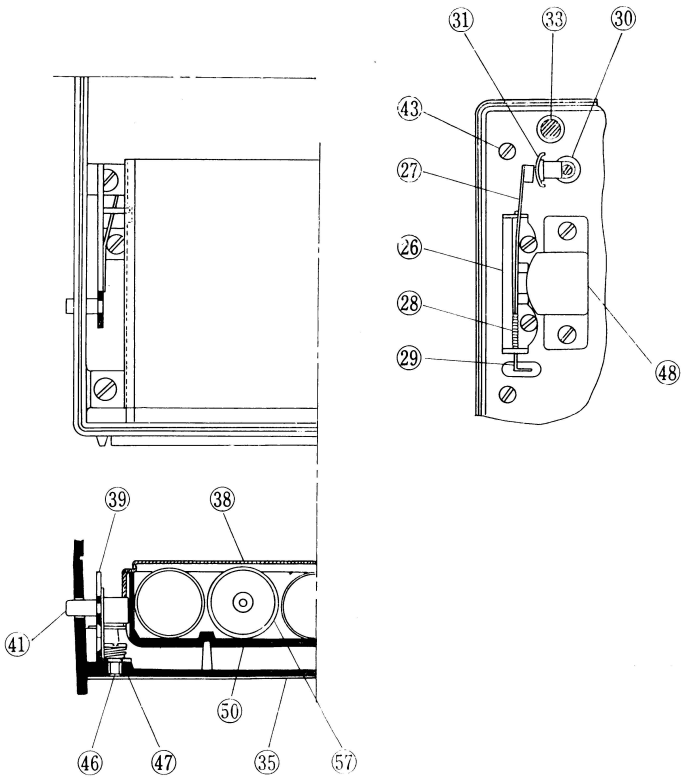

PART NO.	STOCK NO.	DESCRIPTION
CABINET		
1	KR3-31009	lid
2	KR3-31010	back cover
3	KR4-26018	baffle plate B
4	KR4-26019	decoration panel on lid
5	KR4-26020	decoration panel on back cover
6	KR4-24010	baffle plate fixture
7	KR4-25019	back cover fixing screw
8	KR4-25020	lid axis
9	KR4-16004	spring for above
10	KR4-36007	cushion for baffle plate
11	KR4-26027	decoration panel on housing
12	KR4-25016	spacer

PART NO.	STOCK NO.	DESCRIPTION

MISCELLANEOUS

13	KR1-28001	chassis
14	KR4-26024	decoration panel A on side cover
15	KR4-26025	decoration panel B on side cover
16	KR4-11019	motor support A
17	KR4-11020	motor support B
18	KR4-11030	motor case
19	KR4-31001,2	reel
20	KR-AS010	reel disk B
21	KR4-28004	reel spindle A
22	KR4-23002	reel spring
23	KR4-25015	fixing screw for above
24	KR4-25018	fixing screw for reel disk
25	KR4-11034	washer for reel spindle
26	KR4-11032	pad fixture
27	KR4-11028	pressure pad
28	KR4-16002	pad spring
29	KR4-16005	pad arm
30	KR4-25025	eraser push
31	KR4-24009	eraser A
32	KR3-30111	MC-2 head housing
33	KR4-25026	tape guide A
34	KR4-14004	lid snapping spring
35	KR4-11021	shield
36	KR4-31014	jack insulator ring A
37	KR4-31015	jack insulator ring B
38	KR4-11023	battery holder
39	KR4-11024	battery case fixture
40	KR4-33005	printed circuit board A
41	KR4-25028	push pin
42	KR4-11029	washer
43	KR4-25024	special bolt for head housing
44	KR4-26031	number-indicated plate for volume
45	KR4-25029	tape guide B
46	KR4-25030	fixing screw for battery case fixture
47	KR4-16006	spring A for battery case fixture
48	KR-E0022	head C
49	KR-V01	speaker
50	KR-E0023	battery case
51	KR-E0010	motor
52	KR-G3503	speed control knob color-calibrated
53	KR-G3504	volume control knob
54	KR-E0019	sliding switch knob A-1
55	KR-E0020	sliding switch knob B-1
56	KR-E0021	sliding switch knob C-1
57	KR-E0015	$1\frac{1}{2}$-volt penlight battery
58	KR-E0024	sliding plate for battery case.

TRANSISTORS

TR 1	2SB186	1st amplifier
TR 2	2SB186	2nd amplifier
TR 3	2SB187	power amplifier
TR 4	2SB187	power amplifier

PART NO.	STOCK NO.	DESCRIPTION

THERMISTOR

T h	SDT-20	temperature compensator

TRANSFORMERS

T 1	KR-N01	input transformer
T 2	KR-V02	output transformer

CONTROLS

SW(A-1)	KR-E0019	REWIND-FORWARD sliding switch
SW(B-1)	KR-E0020	ON-STOP sliding switch
SW(C-1)	KR-E0021	PLAY-RECORD sliding switch
VR 1	KR-G3504	volume control D-10K ohms
VR 2	KR-G3503	speed control B-20 ohms

ELECTROLYTIC CAPACITORS

C 1		30 μF	6WV
C 2		10 μF	6WV
C 3		30 μF	6WV
C 4		10 μF	6WV
C 6		30 μF	6WV
C 7		10 μF	6WV
C 9		150 μF	6WV
C 12		10 μF	6WV

FIXED CAPACITORS

C 5		500 pF ± 20%	50WV
C 8		0.01 μF ± 20%	50WV
C 10		0.05 μF ± 20%	50WV
C 11		0.01 μF ± 20%	50WV

FIXED RESISTORS

R 1		60K ohms ± 10%
R 2		10K ohms ± 10%
R 3		4K ohms ± 10%
R 4		1K ohms ± 10%
R 5		1K ohms ± 10%
R 6		40K ohms ± 10%
R 7		100K ohms ± 10%
R 8		500 ohms ± 10%
R 9		25K ohms ± 10%
R 10		4K ohms ± 10%
R 11		200 ohms ± 10%
R 12		10 ohms ± 10%

LOUDSPEAKER

S P	KR-V01	2″ permanent dynamic type

SPECIFICATIONS SUBJECT TO CHANGE WITHOUT NOTICE.