MISCELLANEOUS COMPONENTS

No. on Dial Parts Diagram	Description	Code No.
—	Assembly, baffle	CR.005.223
—	Assembly, cursor	CR.480.628
6	Assembly, dial drum	CR.382.815
—	Assembly, escutcheon	CR.520.811
—	Assembly, lampholder	CZ.367.900
1	Assembly, slide rod mtg. brkt. R.H.	CR.263.205
7	Assembly, slide rod mtg. brkt. L.H.	CR.263.206
—	Assembly, terminal	CZ.376.200
—	Assembly, T/C-on/off switch	CZ.200.504
—	Assembly, T/C clicker	CR.450.032
—	Assembly, W/C switch	CZ.201.202
—	Assembly, W/C clicker	CR.450.033
—	Back, cabinet	CS.462.058
—	Badge, Mullard	CR.531.409
—	Bank, T/C switch	CZ.200.412
—	Bank, W/C switch, A1	CZ.201.203
—	Bank, W/C switch, A2	CZ.201.204
—	Block, dial mounting	CS.424.048
—	Bracket, cab. back mtg.	CS.244.602
—	Bracket, escutcheon mtg.	CS.231.210
—	Cabinet	CS.460.484
—	Clamp, speaker	CS.234.813

No. on Dial Parts Diagram	Description	Code No.
—	Clip, coil can mtg.	CS.235.831
—	Cloth, speaker baffle	CE.081.14
3	Cord, dial	CS.361.828
4	Cord, drum	CS.361.827
—	Grommet, baffle mtg.	CS.422.443
—	Grommet, chassis mtg.	CS.422.421
—	Grommet, power cord	CS.422.414
—	Indicator, wave band	CR.483.027
—	Knob, control	CS.432.618
—	Nipple, slide rod tension	CS.274.603
—	Plate, spindle bearing	CS.400.201
2	Pulley, wooden	CS.360.202
—	Ring, "C" (tuning spindle)	CS.281.802
8	Ring, dial cord	CS.281.807
—	Rod, dial slide	CS.382.213
—	Scale, dial	CS.412.299
—	Socket, noval wafer	CZ.369.702
—	Socket, octal moulded	CZ.369.515
—	Socket, pick-up	CZ.370.106
—	Spacer, baffle mounting	CS.213.148
9	Spindle, tuning	CS.351.314
5	Spring, dial drum	CS.210.010
—	Switch, mains on/off	CZ.220.001
—	Washer, felt (knobs)	CS.424.057

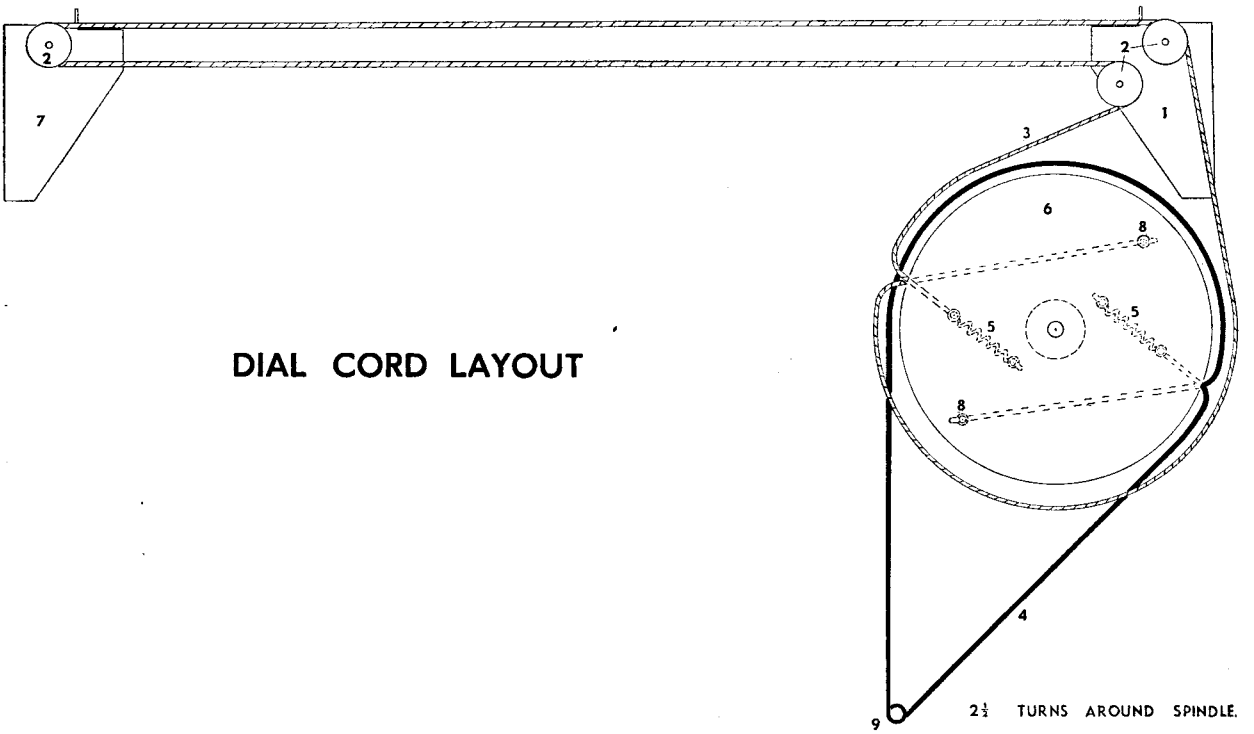

DIAL CORD LAYOUT