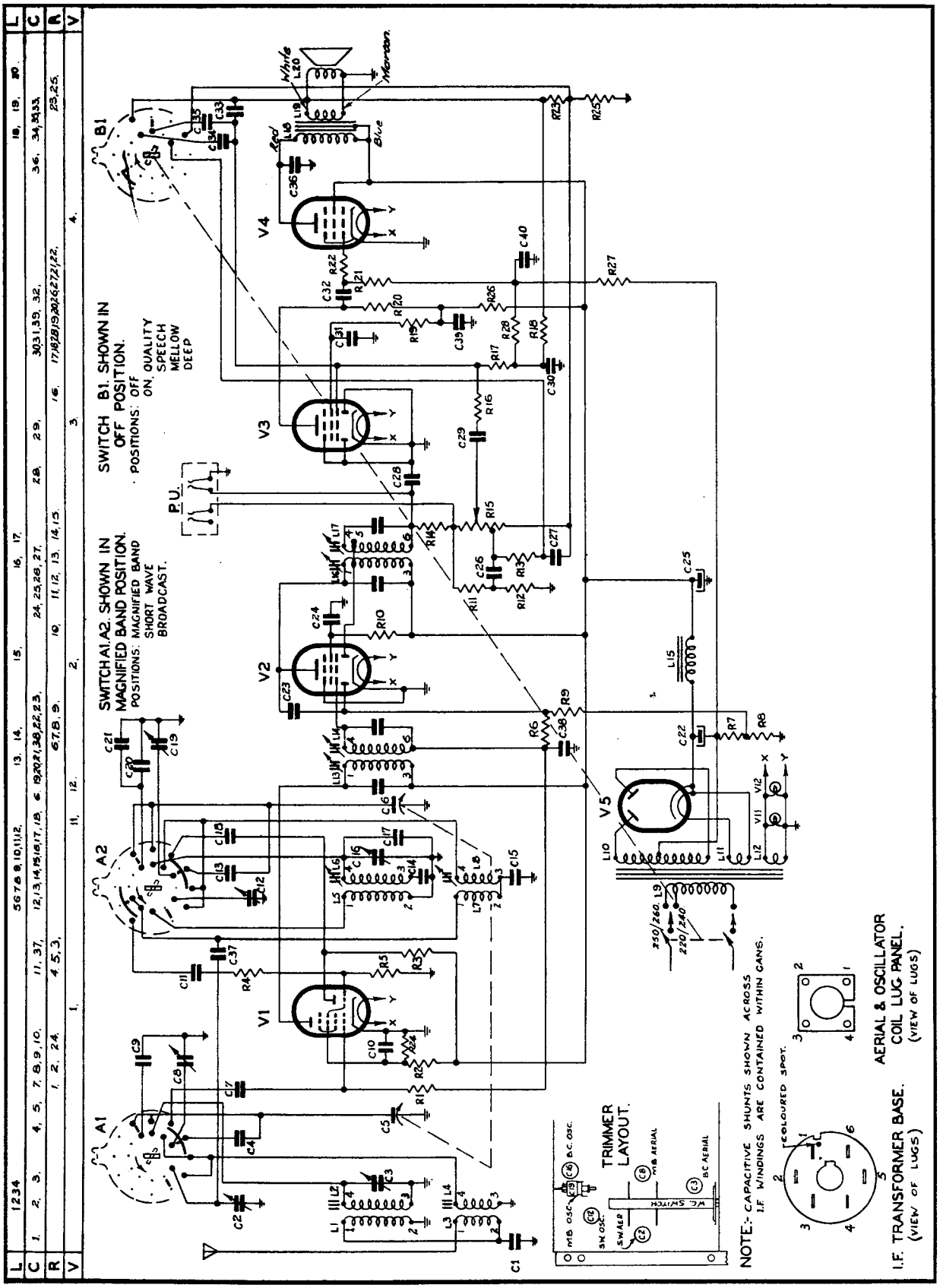
SWITCH B1. SHOWN IN OFF POSITION.
POSITIONS: OFF
ON, QUALITY
SPEECH
MELLOW
DEEP
SWITCH A1.A2. SHOWN IN MAGNIFIED BAND POSITION.
POSITIONS: MAGNIFIED BAND
SHORT WAVE
BROADCAST.
P.U.
NOTE:- CAPACITIVE SHUNTS SHOWN ACROSS I.F. WINDINGS ARE CONTAINED WITHIN GANG.
TRIMMER LAYOUT.
I.F. TRANSFORMER BASE. (VIEW OF LUGS)
AERIAL & OSCILLATOR COIL LUG PANEL. (VIEW OF LUGS)
COLOURED SPOT.
250/260
220/240