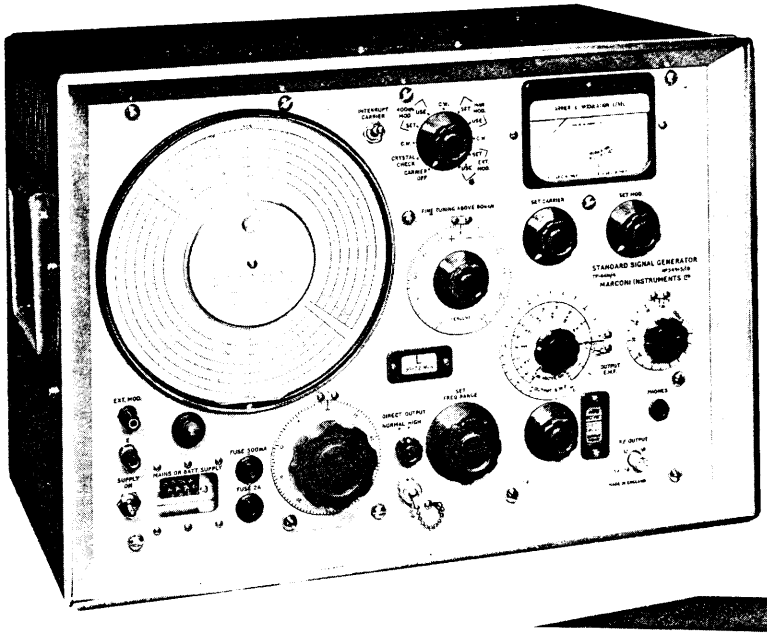

TF 144H/4

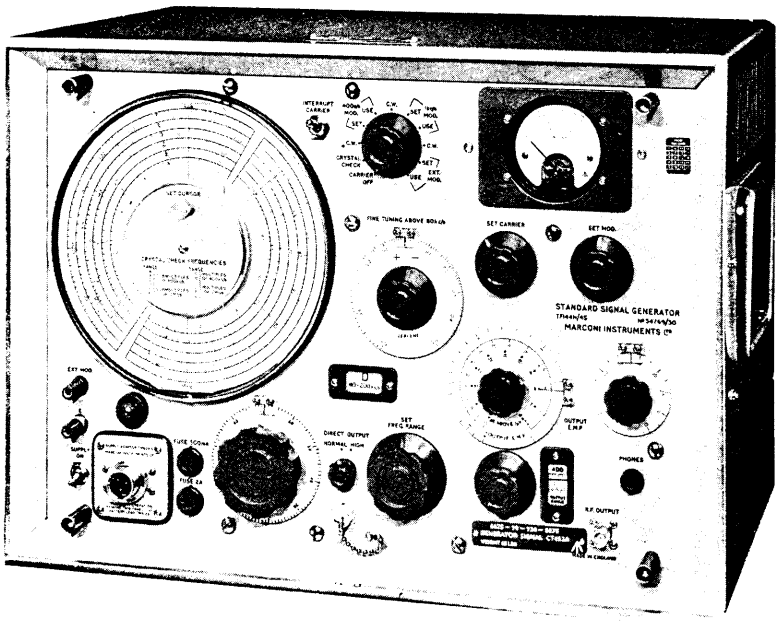

TF 144H/4S

=

MILITARY

CT 452A

OPERATING AND MAINTENANCE HANDBOOK No. OM 144H (II)

for

A.M. Signal Generator
TF 144H *(Series II)*

Types TF 144H/4, TF 144H/4R, TF 144H/4S and TF 144H/6S

CONTENTS

I GENERAL INFORMATION

1.1 FEATURES

The TF 144H series of signal generators give c.w. and a.m. outputs suitable for the standard measurements and tests on equipment operating in the m.f., h.f., and lower v.h.f. bands. Their good frequency stability and high-discrimination tuning are of particular advantage in testing narrow-band communication receivers.

Each generator covers 10 kc/s to 72 Mc/s in twelve ranges. Eight of these ranges follow a straight-line frequency law and have a frequency cover of 2:1; the remaining four have a slightly greater range and one of them covers the medium-wave broadcast band. A large effective scale length is provided on the main tuning dial which has separate hand-calibrated scales for each range. Its discrimination is such that a 2% frequency change on any band occupies more than a quarter of an inch of scale length. Frequency accuracy is ±1%, but for greater accuracy there is a built-in crystal calibrator which gives at least 90 crystal check points throughout the twelve ranges.

An 8:1 reduction drive from the main tuning control enables easy and precise adjustment to be made, and a linear logging scale with 100 divisions attached to the main tuning control facilitates interpolation between any of the main-scale divisions. In addition to the logging scale, a fine tuning control is provided which is operative above 80 kc/s and enables incremental frequency adjustments to be made, with complete freedom from backlash, up to ±0.5% of the frequency in use.

Modulation can be applied from an internal 400-c/s to 1000-c/s oscillator or from an external source. In both cases, depth is variable up to 80% over most of the frequency range.

There are two r.f. signal outlets. One supplies an output e.m.f. switchable between 2 and 2.75 volts (monitored by the meter) at very low impedance while the other supplies a variable e.m.f. between 2 μV and 2 volts via coarse and fine 50-ohm attenuators; the output range may be extended down to 0.2 μV by using the 20-dB Attenuator Pad accessory. A system of automatic level control keeps the carrier level constant throughout wide frequency changes.

Designed for operation from either a.c. mains or battery supplies the instrument is available in forms suitable for bench or rack mounting, as detailed below.

1.2 STANDARD AND SERVICES VERSIONS

TF 144H/4 and TF 144H/4R are the standard bench- and rack-mounting models. The versions with suffix 'S' are Services types which are distinguished from the standard models by a sealed round meter, a Plessey Mk. IV mains supply plug, and accessories supplied.

Standard Models

TF 144H/4 : Bench mounting
TF 144H/4R : Rack mounting

Services Models

TF 144H/4S : Bench mounting. No accessories. Joint-Service Ref. No. CT 452A, 6625-99-924-8875.

TF 144H/6S : Bench mounting. With accessories. Ref. No. CT 452A Set 6625-99-900-8337.

The accessories supplied and available are described in Section 1.4.

1.3 DATA SUMMARY

FREQUENCY	
Range:	10 kc/s to 72 Mc/s, in 12 bands.
Main Tuning:	Straight-line frequency law on 8 bands. Linear logging scale on slow-motion drive divides the main scale into nearly 400 divisions per band.
Calibration Accuracy:	±1%.
Fine Tuning:	Calibrated directly in % frequency change. Discrimination: 1 division = 0.01%. Total cover: 1%. Accuracy: ±10% of scale reading for carrier frequencies below 16 Mc/s; 15% of scale reading for higher frequencies. For use at carrier frequencies above 80 kc/s only.
Crystal Check:	400 kc/s and 2 Mc/s crystals selected automatically by band switch. Accuracy: ±0.005%.
Stability:	±0.002% in a ten minute interval after warm up.
OUTPUT	
At DIRECT OUTPUT socket	
Normal:	2 V approximately.
High:	100 mW c.w. (2.75 V into 75 Ω) directly monitored to an accuracy of ±0.5 dB on ranges A to K or ±1.0 dB on range L.
At R.F. OUTPUT socket	
Impedance:	50 Ω, v.s.w.r. better than 1.25:1.
Calibrated Output:	2 μV to 2 V e.m.f. Low outputs down to 0.2 μV using 20 dB pad TM 5573.
Coarse Attenuator:	Eleven 10 dB steps.
Fine Attenuator:	Ten 1 dB steps; interpolation by carrier level control and meter.
Attenuator Accuracy:	Within ±0.7 dB ±0.25 μV up to 30 Mc/s; within ±1 dB ±0.25 μV up to 72 Mc/s.
Level Monitor:	Protected thermocouple voltmeter. Accuracy ±0.5 dB.
Stray Radiation:	Negligible; permits full use of lowest output.
MODULATION	
Internal A.M.:	400 c/s and 1 kc/s, switch selected.
Depth:	0 to 80% (dependent upon modulating frequency at low carrier frequencies - see table under External A.M.); monitored by carrier level meter and calibrated control.
	Accuracy of r.m.s. modulation: ±5% modulation (i.e. 6.25% of full scale) at carrier frequencies where 80% modulation is obtainable with low distortion - see table under External A.M.

External A.M.:

Minimum modulation frequency: 20 c/s. The maximum modulating frequency and depth which can be obtained at low distortion, when the ratio of modulating frequency to carrier frequency is small is, typically, as shown in the following table:-

Carrier Frequency	Max. Mod. Frequency		
	0-30%	30-50%	50-80%
10 kc/s	1 kc/s	400 c/s	200 c/s
100 kc/s	5 kc/s	2 kc/s	1 kc/s
1 Mc/s	20 kc/s	14 kc/s	8 kc/s
10 Mc/s	20 kc/s	17 kc/s	15 kc/s
72 Mc/s	20 kc/s	20 kc/s	20 kc/s

Input requirements:
Ranges A to H: not more than 6 V into 25 kΩ for 80% modulation.
Ranges I to L: not more than 12 V into 25 kΩ for 80% modulation.

Spurious A.M. on C.W.: Less than 0.1% depth.

Spurious F.M. on C.W.: Deviation less than $\pm 1 \times 10^{-6}$ of carrier frequency.

Spurious F.M. on A.M.: Deviation less than $\pm 1 \times 10^{-4}$ of carrier frequency or 100 c/s whichever is the greater, at 30% modulation depth at carrier frequencies less than 16 Mc/s. Between 16 Mc/s and 30 Mc/s the figure may increase to $\pm 1.5 \times 10^{-4}$ of carrier frequency.

POWER SUPPLY
(A.C. Mains or external batteries)

A.C. Mains: 200 to 250 volts or 100 to 130 volts, adjustable at plug type supply mains tapping panel. Frequency range, 40 to 60 c/s; consumption, 80 watts.

Batteries: L.T.: 6 volts, 2 amps. H.T.: 240 volts, up to 50mA depending on setting of controls.

DIMENSIONS & WEIGHT
(in bench case):

Height	Width	Depth	Weight (144H/4S)	Weight (144H/4)
$14\frac{1}{2}$ in (36.2 cm)	19 3/4 in (50.2 cm)	11 in (27.9 cm)	65 lb (29.5 kg)	63 lb (28.6 kg)

1.4 ACCESSORIES

1. STANDARD MAINS LEAD
   Type TM 2560 CA: 6 ft long; for a.c. mains operation of TF 144H/4 and TF 144H/4R only.

2. SERVICES MAINS LEAD - Connector Type 3429/1 (A.M. Ref. 10HA/8359); Admiralty Ref. A.M. 67384): 5 ft long; for a.c. mains operation of 'S' versions only. (Joint Services Ref. No. 5995-99-945-9896).

3. BATTERY LEAD Type TM 6122: 6 ft long; for battery operation of all models.

4. OUTPUT LEAD Type TM 4969/3: 50 ohms; BNC plug - BNC plug; 5 ft long (Joint Service Ref. No. 5995-99-580-0513).

5. (Deleted)

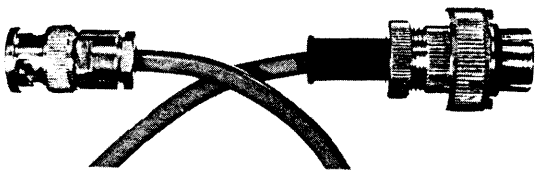

6. 20 dB PAD Type TM 5573: 50 ohms; BNC plug - BNC socket; (Joint Service Ref. No. 5905-99-580-0510).

7. MATCHING PAD Type TM 5569: 50 to 75 ohms; BNC socket - Belling-Lee L734/P plug.

8. MATCHING PAD Type TM 6599: 50 to 75 ohms; BNC plug - Burndept PR4E plug. (Joint Service Ref. No. 5905-99-580-0511).

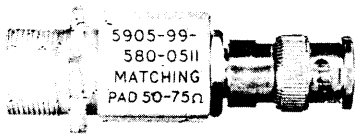

9. DUMMY AERIAL & D.C. ISOLATING UNIT Type TM 6123: Input, BNC plug on 3 ft lead; output, spring-loaded terminals. For general receiver testing or for use on circuits with d.c. potentials up to 350 volts. (Joint Service designation: COUPLER SIG. GEN., Ref. No. 6625-99-913-9483).

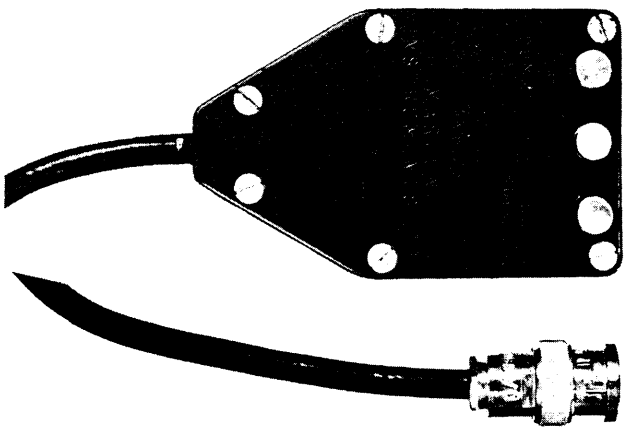

Accessories supplied with each version are as follows :-

TF 144H/4 and TF 144H/4R : 1, 4, 6.
TF 144H/4S : None
TF 144H/6S : 2, 4, 6, 9.

2 OPERATION

2.1 INSTALLATION

Take off the transparent plastic cover, if one is supplied with the instrument. If the cover is not completely removed when the instrument is operated overheating may occur. Position the instrument so that the ventilating louvres at the rear and underneath are not obstructed.

Unless otherwise specified, the instrument is despatched with its mains input circuit adjusted for immediate use on 240 volts within the frequency range 40 to 60 c/s. It may also be adjusted for operation from other a. c. supply mains in the range 100 to 130 and 200 to 250 volts, or from 6-volt l. t. and 240-volt h. t. external batteries.

2.2 CONNECTIONS

For a. c. mains operation, first check or alter the mains transformer tappings as shown in Section 4.2. Connect the instrument to the power socket by means of the mains lead and plug in the r.f. lead to the R.F. OUTPUT socket. These leads are normally stowed in the two case handle recesses. A 20-dB Attenuator Pad for use with the r.f. lead when required, is clipped inside the right-hand recess.

When the instrument is supplied for Services use, an adaptor Type TM 6263 is fitted into the front panel supply plug. This provides the necessary circuit linkages, and also an entry for the standard Plessey MkIV Services power lead.

For battery operation, connect up the special battery lead Type TM 6122 available as an optional accessory If the instrument is to be used in a vehicle, use a separate l. t. battery, or alternatively, check that the vehicle wiring employs a negative earth return system. Since there is no Services equivalent for the lead Type TM 6122 the Adaptor mentioned above should be removed to make way for the McMurdo Type socket on the end of the battery lead.

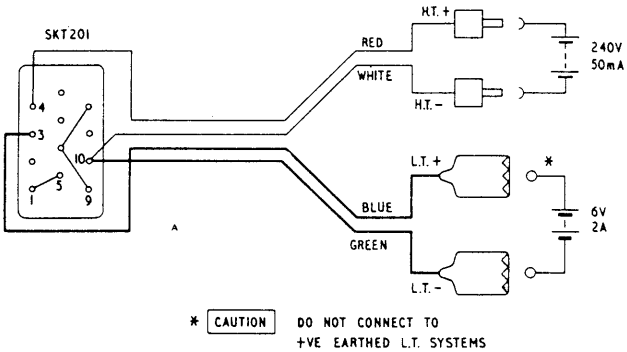

Fig. 2.1 Battery Supply Lead

2.3 WARMING UP

The specified stability of 0.002% in a 10-minute period is not attained until a warm-up period of about 3 hours has elapsed. After switching on, and with the function switch set to any position other than CARRIER OFF, the initial drift will be of the order of 0.01% of any selected frequency per 10-minute period. This higher order of drift will of course diminish with time. and you should therefore leave the instrument switched on during periods of intermittent use - preferably switched to the frequency range required. When changing from one frequency range to another, a period of 15 minutes or more should be allowed for maximum stability.

During the warm-up period however, you can still be assured of a high order of accuracy provided that frequency checks are made using the crystal calibrator. This particularly applies in the case of battery operation when it is undesirable to leave the instrument switched on for long periods.

2.4 CONTROLS: SUPPLY AND TUNING

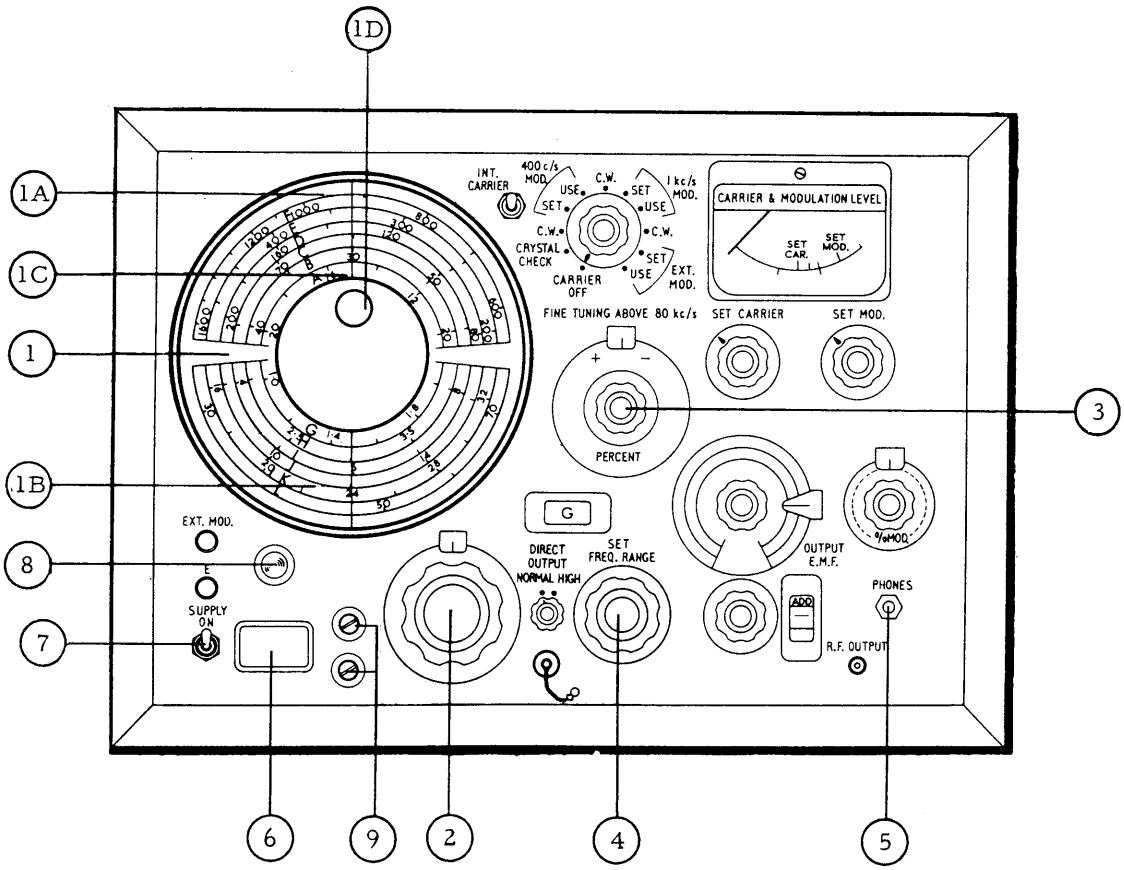

(1) MAIN TUNING DIAL

(1A) Cursor for ranges A-F (10-1,605 kc/s).

(1B) Cursor for ranges G-L (1-72 Mc/s).

(1C) Arrow Reference Mark. Align upper cursor with this when not using crystal calibrator.

(1D) Set Cursor Control. Allows either cursor to be adjusted for standardizing scale against crystal check points - see Table in Section 2.8.

(2) MAIN TUNING CONTROL. For logging scale calibration see Section 2.9.

(3) FINE TUNING CONTROL. Gives ±0.5% incremental tuning on ranges D to L. Each scale division represents 0.01%.

(4) RANGE CONTROL. 12-position. Identification and frequency of range selected is shown in the window.

(5) PHONES JACK. Insertion of telephone plug, with Function Selector set to CRYSTAL CHECK, switches on crystal calibrator.

(6) SUPPLY PLUG. Connect lead TM 2560 CA or 3429/1 for a.c. mains operation, or TM 6122 for battery operation.

(7) SUPPLY SWITCH. For mains or battery operation.

(8) PILOT LAMP. Indicates valve heaters are on.

(9) FUSES. Supply: 2A, H.T.: 500 mA.

2.5 CONTROLS: MODULATION AND OUTPUT

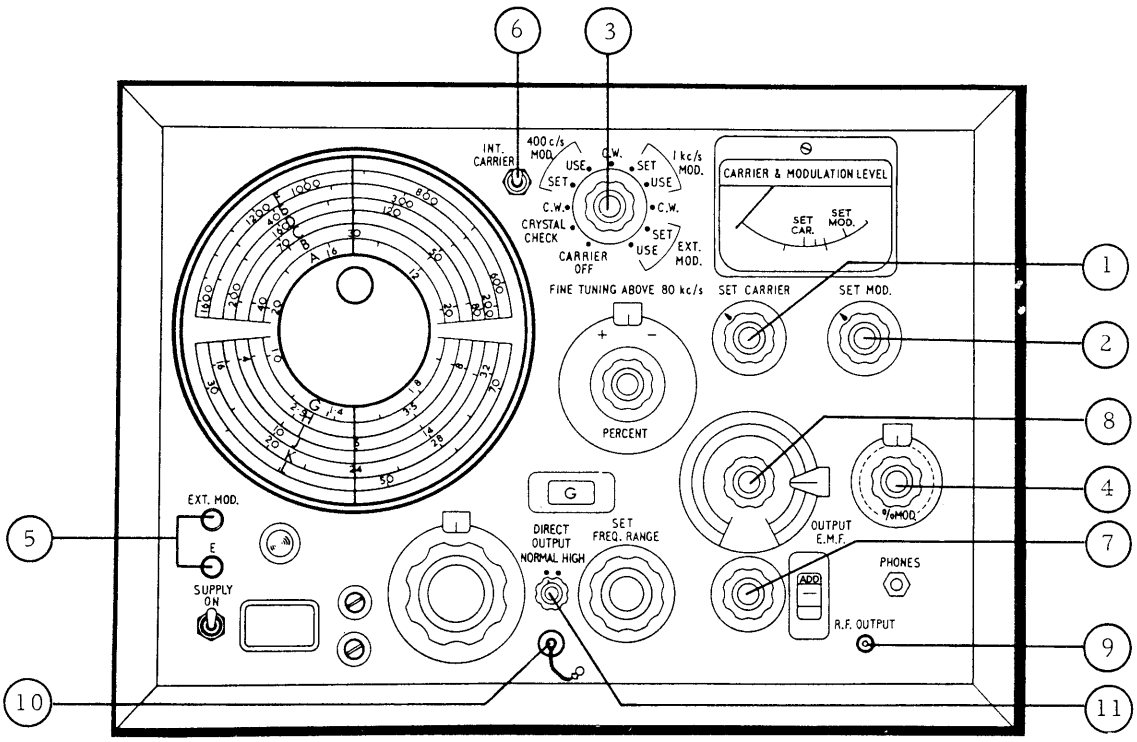

(1) C. W. MONITORING. Adjust to SET CARRIER mark, or to 0.5 dB marks for attenuator interpolation.

(2) MOD. MONITORING. Adjust to SET MOD. mark with MODULATION SELECTOR at a SET position.

(3) MODULATION SELECTOR. Carrier Off position removes h. t. from r. f. oscillator.

(4) % MOD. Controls internal and external modulation.

(5) EXT. MOD. TERMINALS. 25 kΩ impedance. 6 volts input gives 80% modulation on ranges A to H, or 12 volts on ranges I to L.

(6) INTERRUPT CARRIER. For temporarily switching off carrier without affecting output impedance or stability.

(7) COARSE ATTENUATOR. 11 steps of 10 dB.

Figures in window show :-

Black : dB relative to 1 μV, to be added to figure on dial.

Red or Blue: Voltage range covered by same-coloured scale on dial.

(8) FINE ATTENUATOR. 10 steps of 1 dB.

Scales read :-

Black : dB relative to 1 μV, to be added to figure shown by Coarse Attenuator.

Red or Blue: Output voltage. Multiply by factor depending on range shown by Coarse Attenuator.

(9) R. F. OUTPUT. Open-circuit e. m. f. shown by attenuator controls. 50 ohms source impedance. Connector: BNC type UG291/U.

(10) DIRECT OUTPUT. 2 volts output variable only by SET CARRIER control. Connector: BNC type UG290/U.

(11) DIRECT OUTPUT SWITCH. Selects direct output level; in the NORMAL position 2 V, in the HIGH position 2.75 V. With the switch at HIGH there is no output from the R. F. OUTPUT socket.

2.6 QUICK OPERATIONAL CHECK

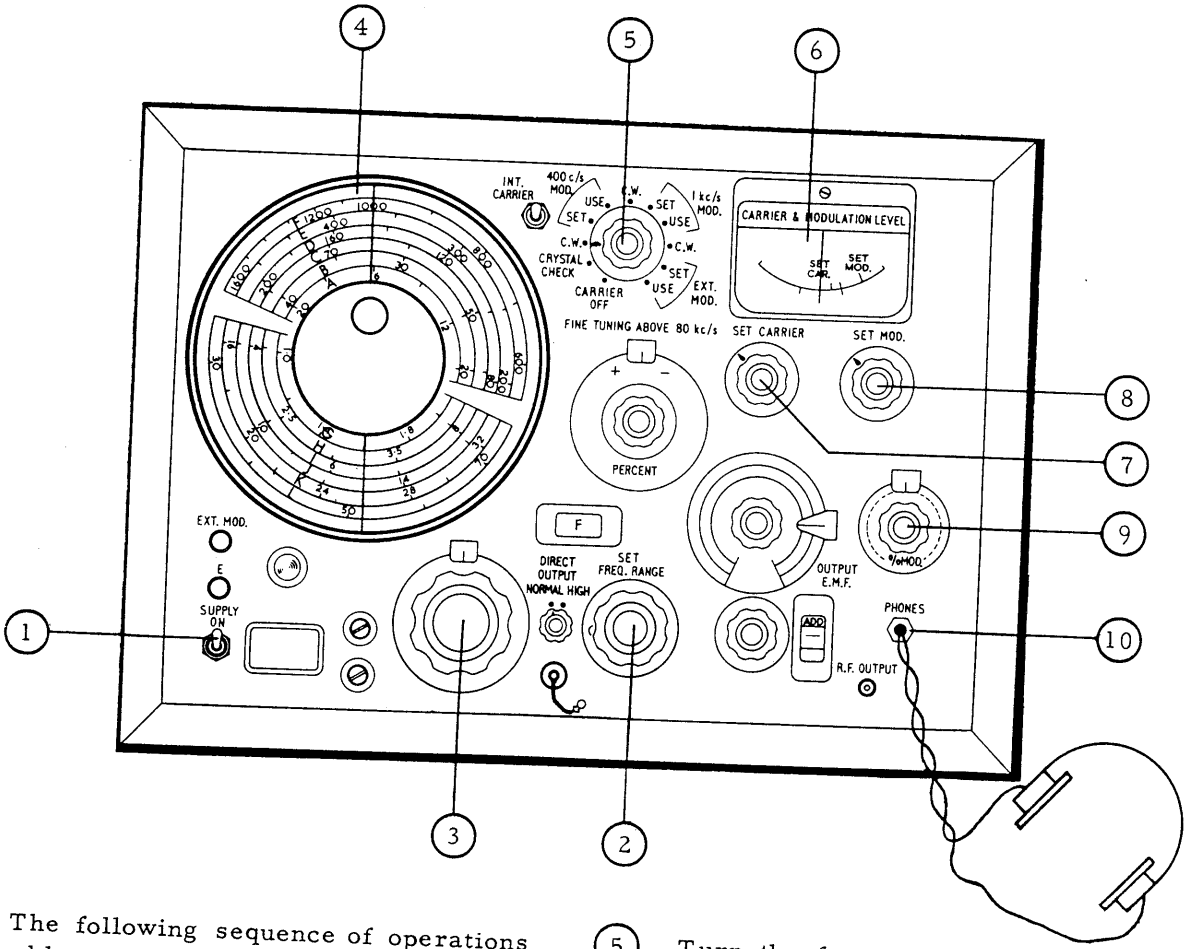

The following sequence of operations will enable you to get the feel of the controls and to check that the r.f. oscillator, modulation circuits, monitor and crystal calibrator are working.

(1) Switch to SUPPLY ON.

(2) Turn the SET FREQ. RANGE switch to F - 535 to 1605 kc/s.

(3) (4) Adjust the main tuning control for an indication of 1000 kc/s against the upper cursor.

(5) Set the function selector to one of the C. W. positions.

(6) (7) Bring the meter pointer to the SET CARRIER mark by adjusting the SET CARRIER control, and note that the control is within, say, the middle third of its travel.

(5) Turn the function selector to 400 c/s MOD - SET.

(6) (8) Bring the meter pointer to the SET MOD mark by adjusting the SET MOD control.

(5) Turn the function selector to 400 c/s MOD - USE.

(9) Rotate the % MOD control and check that the modulation depth readings on the control scale and the meter agree.

(5) Turn the function selector to CRYSTAL CHECK.

(10) Plug headphones into the PHONES jack and check that a beat note can be heard as the main tuning dial is rocked through one or two divisions about the 1000 kc/s mark.

2.7 C.W. OPERATION

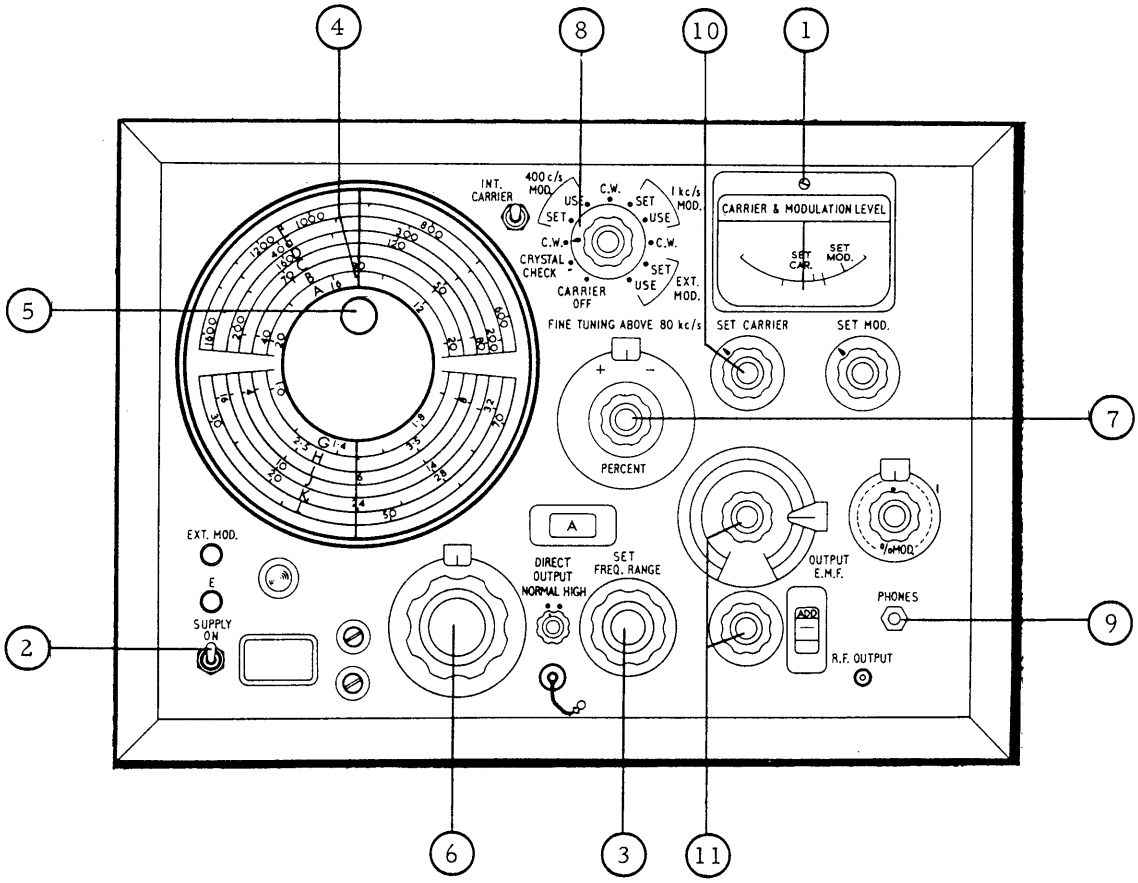

(1) Check the mechanical zero setting of the meter and adjust if necessary.

(2) Switch to SUPPLY ON and allow time to warm up.

(3) Turn the SET FREQ RANGE control to the required range.

(4) (5) (6) Bring the upper cursor line to the arrow mark by means of the SET CURSOR control. Adjust the main tuning control to bring the main dial reading to the approximate frequency required.

(7) Turn the FINE TUNING control to 0.

(8) (9) For maximum accuracy switch to CRYSTAL CHECK and plug headphones into the PHONES jack. Readjust the main tuning control for zero beat at the nearest crystal check point (see Section 2.8 for check point frequencies) and reset the cursor to correct the dial reading.

(6) Tune to the exact required output frequency by adjusting the main dial to the nearest calibrated mark and interpolating by means of the logging scale on the main tuning control (see Section 2.9 for logging scale calibration).

(8) (10) Switch to C.W. and adjust the SET CARRIER control to bring the meter pointer to the SET CARRIER mark.

(11) Adjust the OUTPUT E.M.F. controls for the required output voltage.

NOTE: Watch the meter when making large frequency changes - it may be necessary to readjust the SET CARRIER control.

2.8 USE OF CRYSTAL CALIBRATOR

To use the crystal calibrator, plug headphones into the PHONES jack and switch to CRYSTAL CHECK. Adjust the main tuning dial to obtain zero beat at the nearest check point to the wanted frequency. Then use the SET CURSOR control to align the cursor with the check point frequency indication on the dial.

Crystal check point frequencies occur as follows :-

Ranges A to D at submultiples of 400 kc/s,
Ranges E and F at submultiples of 2 Mc/s,
Ranges G and H at multiples of 400 kc/s,
Ranges I to L at multiples of 2 Mc/s.

The actual frequencies are tabulated below.

TABLE 2.1

CRYSTAL CHECK POINT FREQUENCIES					
Range A 10-20 kc/s	Range B 20-40 kc/s	Range C 40-80 kc/s	Range D 80-200 kc/s	Range E 200-535 kc/s	Range F 535-1605 kc/s
10	20.00	40.00	80.00	200.00	666.66
10.26	21.05	44.44	100.00	222.22	1000.00
10.53	22.22	50.00	133.33	250.00	1333.00
10.81	23.53	57.14	200.00	285.71	1500.00
11.11	25.00	66.66		333.33	
11.43	26.66	80.00		400.00	
11.76	28.57			500.00	
12.12	30.77				
12.5	33.33				
12.9	36.36				
13.33	40.00				
13.79					
14.29					
14.81					
15.38					
16.00					
16.66					
17.39					
18.18					
19.05					
20.00					
Range G 1-2 Mc/s	Range H 2-4 Mc/s	Range I 4-8 Mc/s	Range J 8-16 Mc/s	Range K 16-32 Mc/s	Range L 30-72 Mc/s
Check points every 400 kc/s		Check points every 2 Mc/s			

2.9 TUNING CONTROL LOGGING SCALE

RANGE A : 30 c/s per division
RANGE B : 60 c/s per division
RANGE C : 120 c/s per division

RANGE D

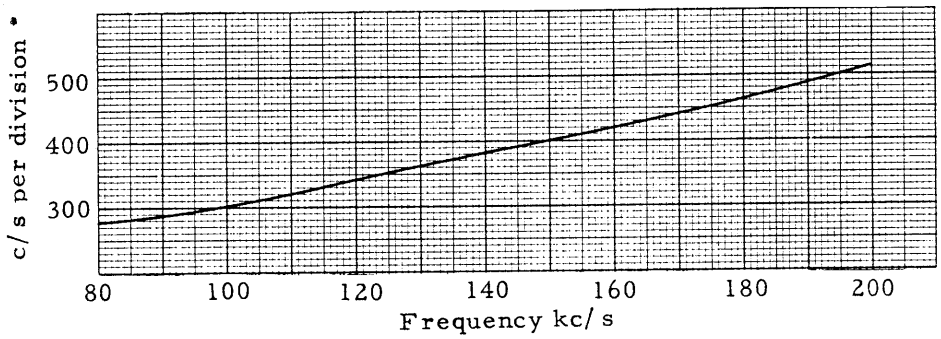

RANGE E

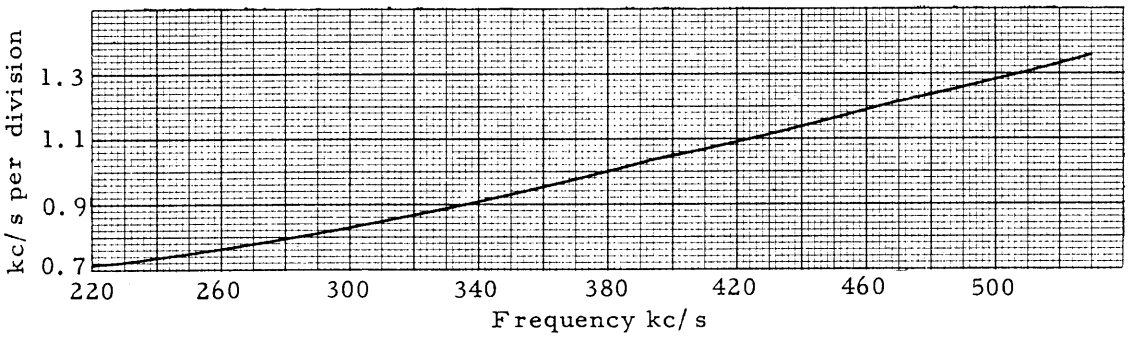

RANGE F

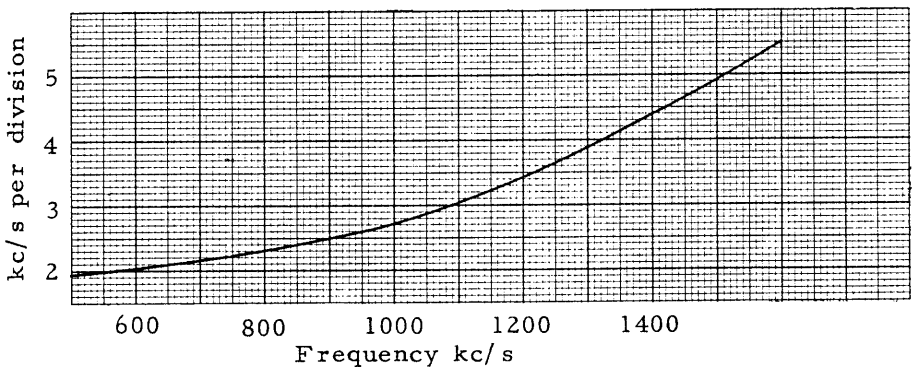

RANGE G : 3 kc/s per division
RANGE H : 6 kc/s per division
RANGE I : 12 kc/s per division
RANGE J : 24 kc/s per division
RANGE K : 48 kc/s per division

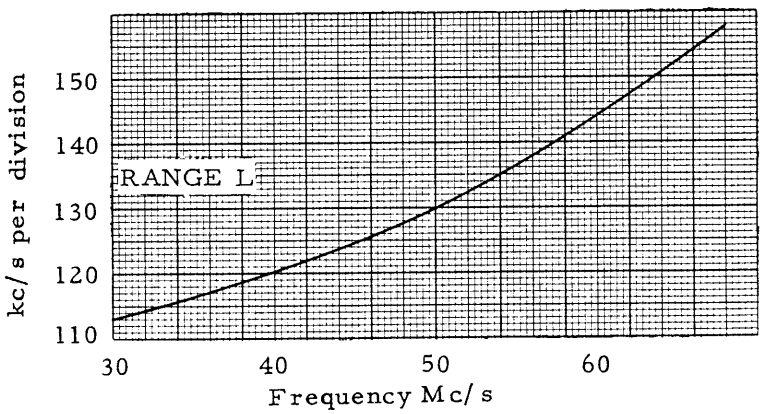

2.10 A.M. OPERATION

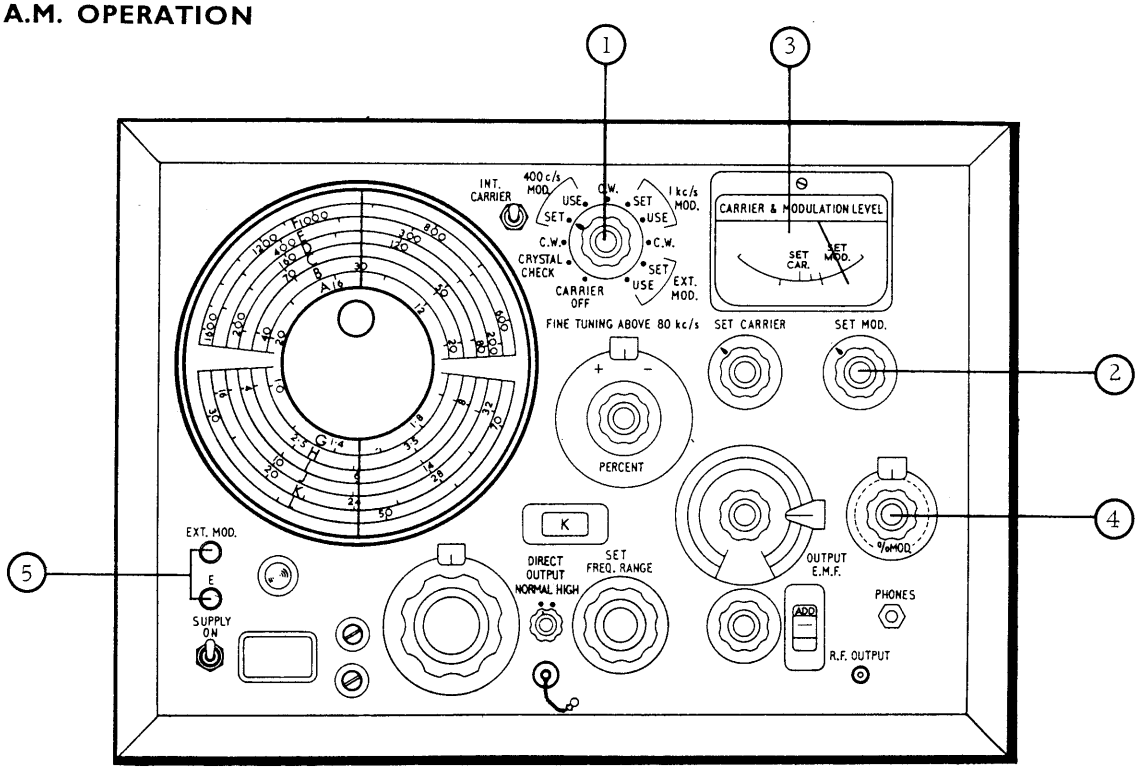

INTERNAL

Switch on, tune, and set output as for C. W. (see Section 2. 7).

(1) (2) (3) Switch to 400 c/ s MOD-SET or 1 kc/ s MOD.-SET and adjust the SET MOD control to bring the meter pointer from the SET CARRIER mark to the SET MOD* mark.

(1) (4) Switch to the adjacent USE position and set the % MOD control to indicate the required percentage modulation on its dial.

EXTERNAL

Switch on, tune, and set output as for C. W. (see Section 2. 7).

(5) Connect the external modulating source to the EXT MOD and E terminals (about 6 volts for 80% modulation).

(1) (2) (3) Switch to EXT MOD-SET and adjust the SET MOD control to bring the meter pointer from the SET CARRIER mark to the SET MOD* mark.

(1) (4) Switch to EXT MOD-USE and set the % MOD control to indicate the required percentage modulation on its dial.

* Except at low carrier and high modulation frequencies. The maximum depth for low-distortion modulation is limited when the modulation frequency exceeds a certain percentage of the carrier frequency (about 2% at 10 kc/ s carrier to about 0. 1% at 10 Mc/ s). The maximum modulation frequencies for different carrier frequencies and modulation depths are shown in the table in Data Summary - Modulation, Section 1.3. When using a combination of carrier and modulation frequency that puts a limitation on the modulation depth, use the 50% or 30% mark on the meter instead of the SET MOD mark; the modulation depth then obtained at any setting of the % MOD control will be lower than indicated by factors of 5/ 8 or 3/ 8 respectively.

For example : at 10 kc/ s carrier, 400 c/ s modulation, set to the 50% mark;
at 10 kc/ s carrier, 1000 c/ s modulation, set to the 30% mark;
at 1 Mc/ s carrier, 14 kc/ s modulation, set to the 50% mark.

2.11 R.F. OUTPUT ARRANGEMENTS

The R. F. OUTPUT circuit of the Signal Generator should be regarded as a zero-impedance voltage source in series with a resistance of 50 ohms. This is shown in Fig. 2.8 where :

E is the indicated source e.m.f.,
Ro is the source resistance,
R_L is the external load resistance

V_L, the voltage developed across the load, is given by

$$V_L = E \cdot \frac{R_L}{R_o + R_L}$$

Note: if the load is not predominantly resistive the reactive component must be taken into account and $\pm jX$ added to R_L.

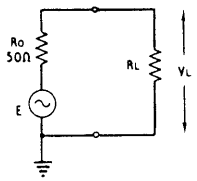

Fig. 2.8
Equivalent output circuit

Table 2.2 shows the conversion factors for obtaining the load voltage from the indicated e.m.f. at different load impedances.

When using a correctly matched, i.e. 50-ohm, output lead its output end can be regarded as an extension to the output socket on the Generator and wide variations in load impedance do not seriously affect the calculated load voltage obtained from Table 2.2. Standing waves produced by the mismatched load can, for most purposes, be ignored.

For greatest accuracy - if the additional attenuation can be tolerated - use the 20-dB Attenuator Pad Type TM 5573 between seriously mismatched loads and the output lead. This ensures that the lead is correctly terminated, and also attenuates any extraneous noise induced in the lead.

TABLE 2.2

LOAD ohms	To find load voltage: Multiply E.M.F. by	or	Subtract dB
10	0.167		15.5
20	0.286		10.9
30	0.375		8.5
40	0.445		7.0
50	0.50		6.0
60	0.55		5.2
70	0.58		4.7
75	0.60		4.4
80	0.62		4.2
90	0.64		3.8
100	0.67		3.5
120	0.71		3.0
150	0.75		2.5
200	0.80		1.9
300	0.86		1.3
500	0.91		0.8
600	0.92		0.7
800	0.94		0.5
1000	0.95		0.4
2000	0.98		0.2
4000	0.99		0.1

OUTPUTS INTO 50-OHM LOADS

The voltage developed across a 50-ohm load is equal to half the e.m.f. indicated on the voltage scales of the Generator output controls, or 6 dB less than dBμV indication

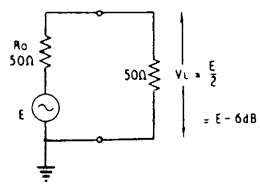

Fig. 2.9
50-ohm load

MATCHING TO HIGH IMPEDANCE LOADS

To present a load that is greater than 50 ohms with a signal derived from a matched source, a resistor Rs is added in series with the Generator output. The value of Rs is given by the difference between the load and Generator impedances, that is,

$$R_s = R_L - R_o$$

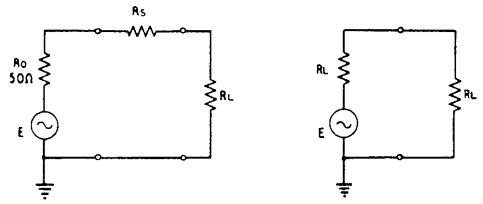

Series resistor in circuit — Equivalent circuit

Fig. 2.10 High-impedance matching

The voltage across the load, V_L, is given by

$$V_L = \frac{E}{2}$$

For the special case of a 75-ohm load a Matching Pad, Type TM 5569 or TM 6599, is available as an accessory and consists basically of a 25-ohm resistor with coaxial connectors for insertion in series with the output lead.

MATCHING TO LOW-IMPEDANCE LOADS

To present a load that is less than 50 ohms with a signal derived from a matched source, a resistor Rp is added in parallel with the Generator output. The value of Rp is given by

$$R_p = \frac{R_o R}{R_o - R}$$

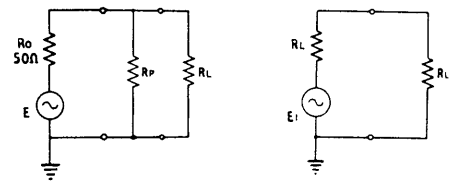

Parallel resistor in circuit — Equivalent circuit

Fig. 2.11 Low-impedance matching

The effective source e.m.f., E_1, is now different and is given by

$$E_1 = E \cdot \frac{R_p}{R_p + R_o}$$

and the voltage across the load, V_L, is given by

$$V_L = \frac{E_1}{2}$$

MATCHING TO BALANCED LOADS

Equipment whose input circuit is in the form of a balanced winding can be fed from the Generator by using two series resistors as shown in Fig. 2.13. This method makes use of the auto-transformer effect of the centre-tapped windings and is <u>not</u> suitable for resistive balanced loads.

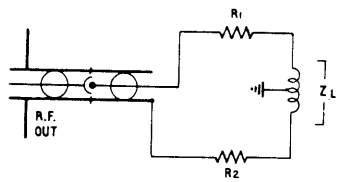

Fig. 2.12 Balanced load matching

The values of R_1 (for use in the live lead) and R_2 (for the earth lead) are given by

$$R_2 = \frac{Z_L}{2}$$

$$\text{and } R_1 = \frac{Z_L}{2} - 50$$

2.12 USE OF 20-dB ATTENUATOR PAD

It is recommended - provided that the reduced output e.m.f. can be tolerated - that the 20-dB Attenuator Pad TM 5573 should be permanently connected to the output end of the r.f. lead. Terminated in this way, the extraneous noise pick-up in the lead is attenuated by a factor of ten before being applied - together with the signal - across the load. This arrangement is particularly advantageous when making signal-to-noise tests on receivers at low voltage level.

With the Pad in circuit, the possibility of errors in apparent e.m.f. or output impedance, due to the presence of standing waves at the higher frequencies, is avoided since it is now impossible to seriously mismatch the r.f. lead. In fact, variations in load impedance between zero and infinity cause the effective value to depart from the correct value by as little as 1 ohm.

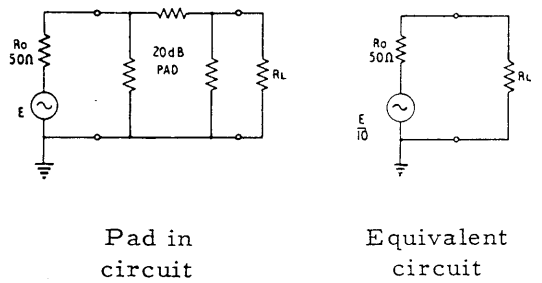

Fig. 2.13 Effect of 20-dB Pad

The Pad reduces the effective source e.m.f. by a factor of 10; therefore, the figures for load voltage obtained from Table 2.2 must be divided by 10 or reduced by 20 dB. The load voltage, V_L, is given by

$$V_L = \frac{E}{10} \cdot \frac{R_L}{R_o + R_L}$$

When matching to loads other than 50 ohms, the matching resistor must be inserted on the output side of the Pad; the expressions given in Section 2.11 then become :-

For series matching, $V_L = \frac{E}{20}$

For parallel matching,

$$V_L = \frac{E_1}{20} = \frac{E}{20} \quad \frac{R_p}{R_p + R_o}$$

2.13 USE OF DUMMY AERIAL AND D.C. ISOLATOR

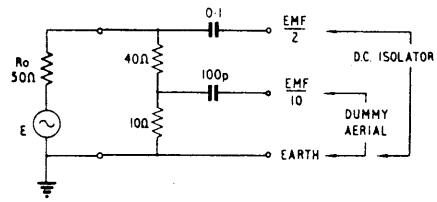

Fig. 2.14 Generator output using TM 6123

To use this dual-purpose unit as a dummy aerial, connect the EMF/10 and E terminals to the receiver under test. The unit then simulates the impedance of a typical aerial for broadcast receivers in the l.f., m.f. and h.f. bands, and provides an open-circuit e.m.f. of one-tenth of that indicated by the Generator.

To use it as a 350-volt d.c. isolator connect the EMF/2 and E terminals to the equipment under test. This allows the Generator output to be applied to circuits having a standing d.c. potential up to 350 volts. The open-circuit e.m.f. is half of that indicated by the Generator.

2.14 DIRECT OUTPUT

Two r.f. levels are available at the DIRECT OUTPUT socket. With the DIRECT OUTPUT switch at NORMAL, an e.m.f. of 2 V is provided. With the switch at HIGH, the e.m.f. provided is 2.75 V, 100 mW into 75 Ω (primarily intended for c.w. but restricted depth modulation can be applied). The source impedance with the switch in either position is virtually zero.

As with the R.F. OUTPUT the stated level depends on the SET CARRIER control having been adjusted to bring the pointer of the CARRIER AND MODULATION LEVEL

meter to the SET CARRIER mark, but you will notice that adjustment to the SET CARRIER control is not usually necessary when switching from NORMAL to HIGH.

The minimum load impedance which may be presented to the DIRECT OUTPUT when switched to NORMAL is 200 Ω and when switched to HIGH is 50 Ω. If, for any reason, the impedance of the load is lower than these figures add a series resistor between the DIRECT OUTPUT and the cable to bring the effective impedance seen by the generator up to the minimum value.

NOTE: At high frequencies the connecting cable may amount to a quarter wavelength and then, if terminated with a high impedance this will appear as a very low impedance to the Signal Generator.

The R.F. OUTPUT is disconnected when the DIRECT OUTPUT is switched to HIGH.

3 TECHNICAL DESCRIPTION

It is intended that the description given in the CIRCUIT SUMMARY below should be read in conjunction with the Functional Diagram. Reference should be made to the Circuit Diagrams at the back of the handbook when reading the more detailed information in the subsequent sections.

3.1 CIRCUIT SUMMARY

Output from the r.f. oscillator stage, V101, is applied direct to the HIGH OUTPUT socket, and also to the R.F. OUTPUT socket via the coarse and fine attenuators. The oscillator output is also applied to the thermocouple meter for carrier level monitoring, to the grid of V102b via the a.l.c. diodes for automatic level control, and to the crystal calibrator V103.

The double-triode stage V103 acts as a crystal oscillator and mixer; its beat note output is used - after amplification by V204a - to provide calibration markers for checking and calibrating the dial. Output to the PHONES jack is taken from the cathode-follower triode V204b which also provides a.g.c. voltage for application to the grid of V204a via the a.g.c. diode.

Valve sections V204a and V204b, when switched for internal modulation, are arranged as a bridge-connected R-C oscillator. Output from the oscillator at the anode of V204b is applied via the cathode-follower V202b to the amplifier V102b. Output from this amplifier is then applied to a further cathode-follower V102a which screen-modulates the r.f. oscillator.

3.2 R.F. OSCILLATOR

All the components associated with the oscillator stage, V102, are contained within a completely screened R.F. Box, although valves V101 to 103 are accessible from outside the R.F. Box. Range selection and appropriate circuit changes are made by means of turret switched components as described in Section 3.3.

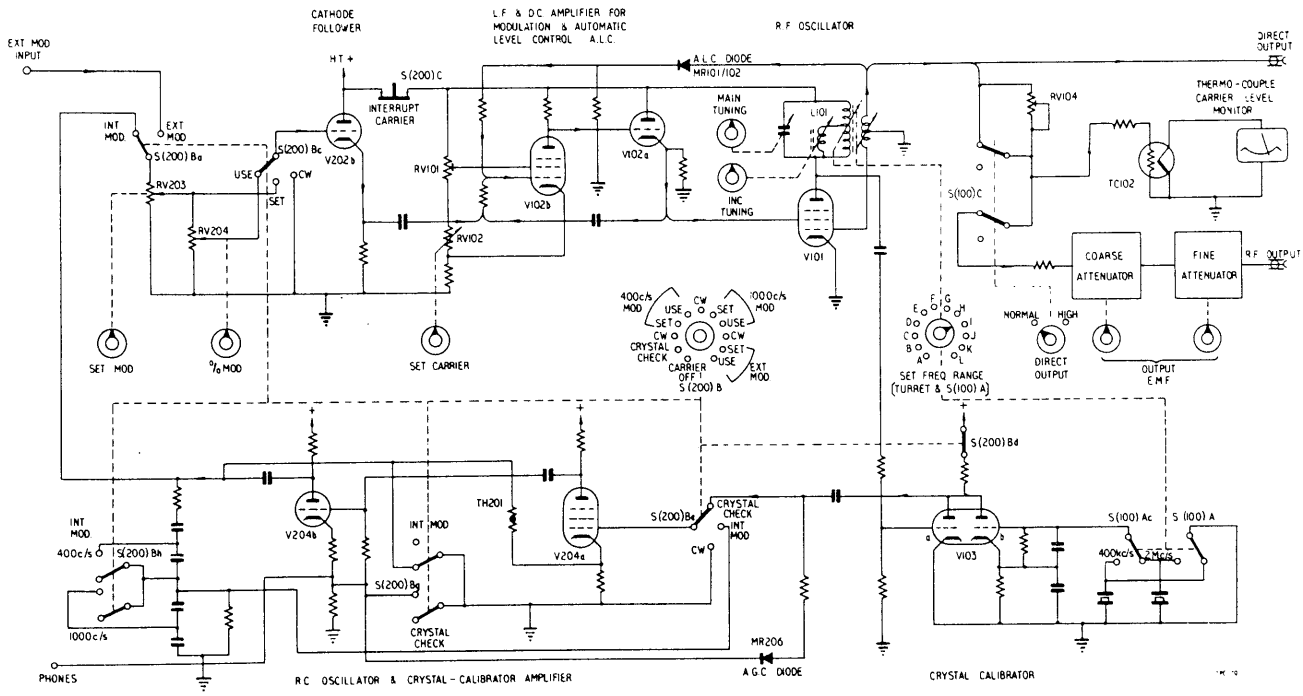

Fig. 3.1 Functional Diagram

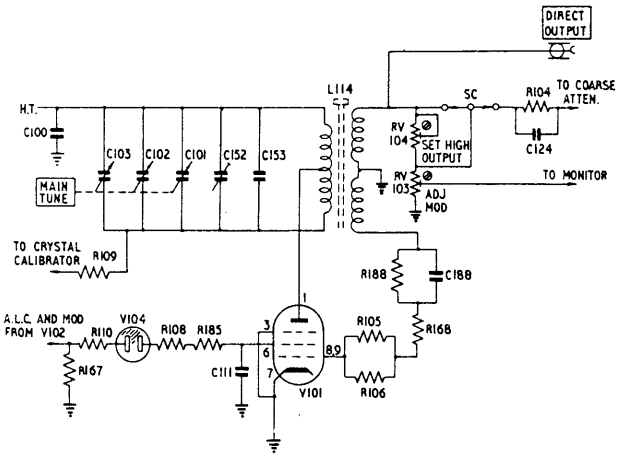

Fig. 3.2 R.F. Oscillator - Range A
(Ranges B and C are basically similar)

On ranges A to K, (see Figs. 3.2 and 3.3) V101 is connected as an r.f. oscillator using a tuned-anode circuit with an inductively coupled feed-back winding connected into the grid circuit. On the highest-frequency range, L, the circuit is changed to that of a Colpitts oscillator (see Fig. 3.4).

The level of the r.f. output is determined by the value of the oscillator screen potential. This potential - which is derived from the cathode of V102a - depends on (i) the potential on the grid of the audio amplifier and a.l.c. valve, V102b, which in turn depends upon the adjustment of the SET CARRIER control RV102, preset resistor RV101, and the automatic level control voltage and (ii) the position of the SET FREQ RANGE switch, section S(100)Ah, which selects the amount of series resistance between the oscillator screen and

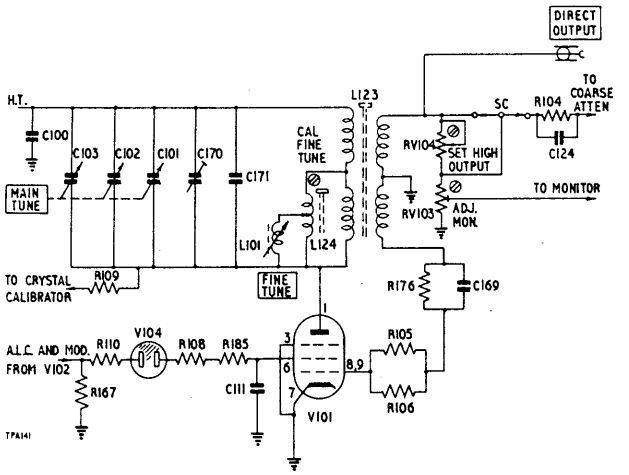

Fig. 3.3 R.F. Oscillator - Range G
(Ranges D to K are basically similar)

the cathode of V102a. On ranges A to H, this potential is limited by the series resistors, R110, R108, R185 and the neon tube V104; on ranges I, J, and K by R110, R108; and on range L, by R110 and R185.

3.3 RANGE SWITCHING

Range switching is accomplished by selecting any one of twelve turret-mounted inductors and associated components by means of the SET FREQ RANGE control; Figs 3.2 to 3.4 show the three principal circuit arrangements. Contacts which provide the connections between the selected components and the main part of the circuit also serve to short-circuit, and earth, the tuning inductor of the next lower section not in use - this being a precaution against the production of spurious resonances.

Switch S(100)A, comprising seven separate sections, is ganged to the SET FREQ RANGE control and performs the following functions :-

S(100)Af and S(100)Ae :

Select the beat note output and switch the h.t. supply of the crystal calibrator V103.

S(100)Ac and S(100)Ad :

Switch the 2,000-kc/s and 400-kc/s oscillator crystals appropriate to the frequency range selected.

S(100)Ab and S(100)Ai :

Route the modulating a.f. output from the cathode follower V202a to the grid of the amplifier V102b as described in Section 3.7. For ranges A, B, and C, the filter network which includes L110 and L111 is used; for the remaining ranges, the filter network which includes L108 and L109 is used.

S(100)Ah :

Provides a coarse adjustment to the screen potential applied to the r.f. oscillator, V101. This maintains the oscillatory voltage at a constant level irrespective of the range in use.

3.4 MAIN TUNING

The main tuning dial control rotates the ganged variable capacitors C101, C102, and C103 via an 8:1 reduction gear. Capacitors C101 and C102 are permanently connected in parallel with one another, and are connected in parallel with the selected tuning inductor as the SET FREQ RANGE control is operated. On ranges A to J, all three capacitors are connected in parallel (C103 is connected in parallel with C101/C102 via the turret contacts 3 and 4). On range K, C101/C102 are disconnected, leaving only C103 connected in parallel with the tuning inductor L132. On range L, all three capacitors are connected in a series/parallel arrangement.

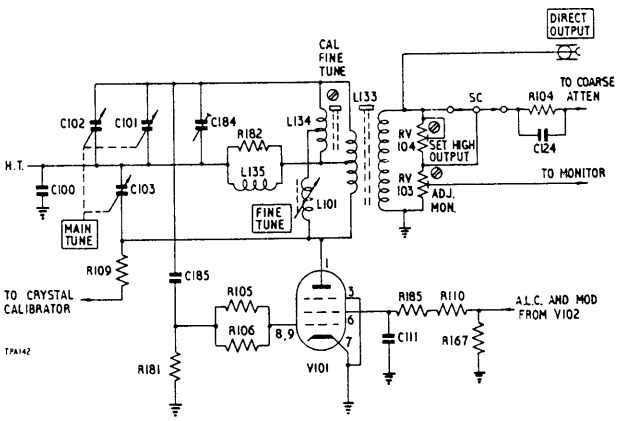

Fig. 3.4 R.F. Oscillator - Range L

3.5 INCREMENTAL TUNING

A small variable inductor (L101) placed effectively in parallel with part of each main tuning inductor via turret contacts 3 and 5 provides an electrical incremental tuning facility. The inductance of L101 is varied by means of the FINE TUNE control which operates a rising cam attached to the inductor core. The actual connection of L101 is across part of the fixed inductor (L118, L120, L122 etc.) associated with each turret section; this in turn is connected in parallel with part of the main tuning inductor. On range C and below the incremental tuning is inoperative.

3.6 MODULATION OSCILLATOR AND CATHODE FOLLOWER

When the function selector switch S(200)B is set to the INT MOD SET and USE positions, the triode-pentode valve V204 functions in a Wien Bridge oscillator circuit. Fig. 3.5 shows the circuit switched for 400-c/s modulation. When 1,000 c/s modulation is selected, capacitor C213 is added in series with C212, and capacitor C214 in series with C215 by means of switch section S(200)Bh.

Level-stabilizing negative feedback is applied to the cathode of V204a from the anode of V204b via the thermistor TH201; positive feedback to the grid of V204a from the junction of C212/C215 (junction C213/C214 for 1,000 c/s) via S(200)Be maintains oscillation.

When the valve is used in this way as a modulation oscillator, the cathode resistor R224 is short-circuited by the contacts of the switch wafer S(200)Bg. When CRYSTAL CHECK is selected, this resistor is restored into the circuit; V204a then functions as an audio amplifier, and V204b as a cathode follower output stage.

In the SET (internal or external modulation) switch positions, the a.f. is applied to the grid of the cathode-follower connected triode V202a via switch wafers S(200)Ba and S(200)Bc, and the uncalibrated SET MOD

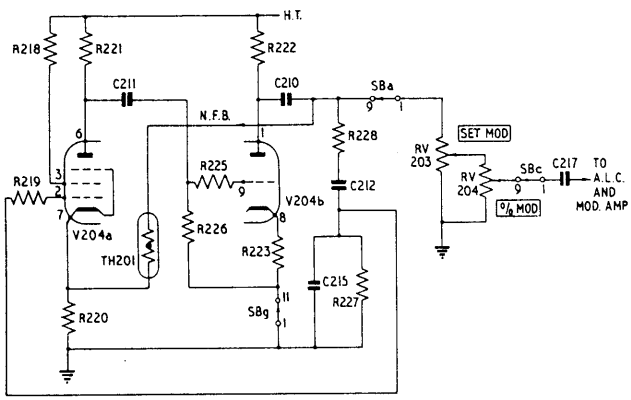

Fig. 3.5 Modulation Oscillator Switched to 400 c/s - USE

control RV203. At this switch setting, and regardless of the setting of the calibrated % MOD control RV204, RV203 provides a means of setting up the modulation level in conjunction with the SET MOD reference mark on the meter. When the switch is moved to the USE position, the modulating voltage is then derived from the slider of the % MOD control.

3.7 A.L.C. AND MODULATION AMPLIFIER

The valve V102 combines the functions of audio amplifier, automatic level control (a.l.c.), and cathode follower output for screen modulating the oscillator valve, V101. The circuit arrangement is shown in Fig. 3.6.

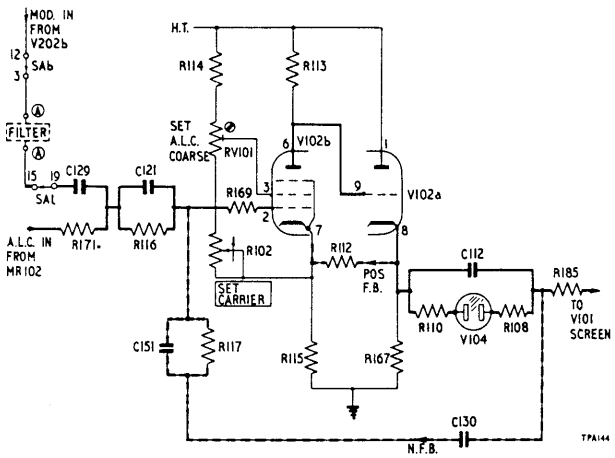

Fig. 3.6 A. L. C. and Modulation Amplifier

Modulating voltages are applied to the grid of V102b from V202b via either of two filter networks and the additional feed and filter components C129, C121 and R116. D.C. coupling is employed between the anode of V102b and grid of the cathode follower V102a - the r.f. output carrier being then modulated by the variation in voltage output at the cathode of V102a.

A. L. C. is obtained by rectifying part of the oscillator output (via C104 and MR102), and applying the resultant d. c. to the grid of V102b, where it is compared with the reference potential set up across R115. For any change in r.f. output, a difference voltage appears at the anode of V102b, and hence the grid of V102a. The level at which the a.l.c. operates depends upon the adjustment of the SET CARRIER control RV102, and the setting of the preset resistor RV101. The SET CARRIER control can be considered as a fine control adjustment to the output carrier level. Since its range of adjustment is small, there is no risk of damage to the thermocouple in the meter monitoring circuit when using the instrument, provided, of course, that the preset resistor RV101 has been previously correctly adjusted.

The heater of V102 (together with the heaters of V101 and V103) is supplied with 6.3 volts d.c. from the stabilized l.t. supply.

3.8 CRYSTAL CALIBRATOR

The purpose of the calibrator is to provide accurate audio calibration markers for standardizing the main tuning dial calibration, and hence the carrier frequency.

Double triode V103 functions as a crystal oscillator/mixer which combines a small portion of the main oscillator output with the oscillations produced by a 400-kc/s or 2-Mc/s crystal. The beat-note output from this valve is then applied via V204 to the PHONES jack.

Triode section V103b is connected in a Colpitts oscillator circuit arrangement;

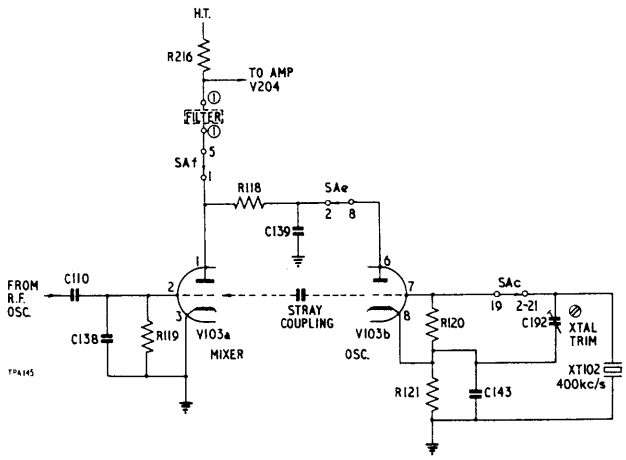

Fig. 3.7 Crystal Calibrator - Ranges A to D

switch section S(100)Ac (SET FREQ RANGE) control) selects the crystal frequency appropriate to the selected frequency range, while section S(100)Ad short circuits the out-of-use crystal.

On ranges A to D, as shown in Fig. 3.7, the 400 kc/s crystal is in circuit; on ranges E and F the 2-Mc/s crystal is used. On all these six ranges, switch wafers S(100)Ae and S(100)Af connect the anode load R216 to the anode of V103a. The h.t. voltage for V103b is obtained via R118 which bridges the two anodes on these ranges. Signal mixing takes place as a result of the stray coupling from triode section V103b.

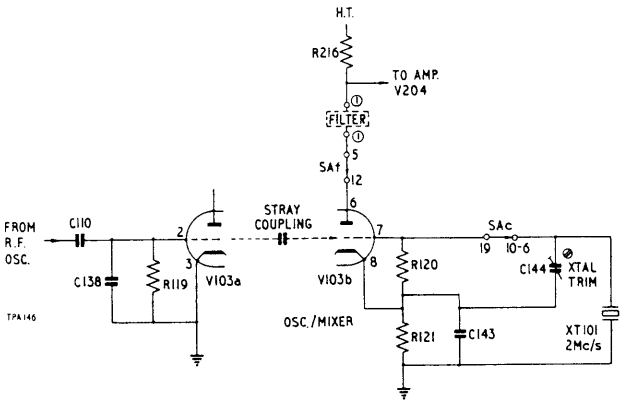

Fig. 3.8 Crystal Calibrator - Ranges I to L

On ranges G and H, the 400-kc/s crystal is in circuit; on ranges I, J, K, and L, as shown in Fig. 3.8, the 2-Mc/s crystal is selected. On these six ranges, resistor R216 is connected to the anode of V103b. The triode section V103a is not energized but provides stray coupling for mixing to take place in V103b.

Switch section S(200)Bd breaks the h.t. supply to the crystal calibrator circuit in all positions other than CRYSTAL CHECK.

3.9 CRYSTAL CALIBRATOR AMPLIFIER

When the function selector is set to CRYSTAL CHECK, output from the crystal calibrator is applied to V204 now functioning as an audio amplifier and cathode follower as shown in Fig. 3.9.

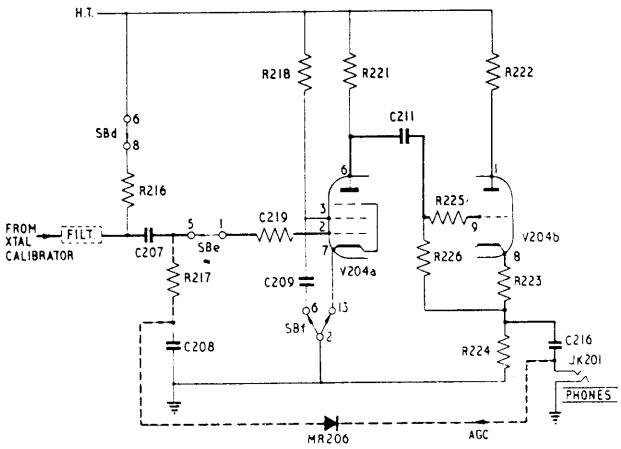

Fig. 3.9 V204 switched as Crystal Calibrator Amplifier

The PHONES jack is connected across the cathode follower (V204b) output at the junction of R224/223, while the signal at this junction is also rectified and applied as a.g.c. to the grid of V204a, via C216 and the a.g.c. diode, MR206. The use of a.g.c. in this circuit arrangement ensures that the level of the audio beat note, used when checking the main tuning dial calibration, remains reasonably constant over the wide frequency coverage of the Generator.

The switch sections, and associated circuit changes, are as follows :-

S(200)Be :

Transfers the grid of V204a to the output of the crystal calibrator at C207.

S(200)Bf :

Connects V204a screen decoupling capacitor C209 to earth, and short-circuits the cathode resistor R220.

S(200)Bg :

Restores the cathode follower resistor R224 to the circuit. Makes the a.g.c. operative by breaking the earth connection. Earths the junction C210/TH201.

3.10 OUTPUT ATTENUATORS

Series connected coarse and fine attenuators between the r.f. oscillator and the R.F. OUTPUT socket provide adjustment of the e.m.f. from the Generator between 2 μV and 2 volts in 1-dB steps. A plug-on 20-dB attenuator pad accessory extends the range down to 0.2 μV. Of the two R.F. OUTPUT controls, the lower knob controls the coarse attenuator, in 10-dB steps, while the dial above it provides a fine interpolation adjustment between 0 and 10 dB. When switched for c.w. working, a fine interpolation between the 1-dB steps of the attenuator can be made by making use of the ±0.5 dB marks on the meter in conjunction with adjustment to the SET CARRIER control.

For any movement of the attenuators, the voltage range covered by the dial, and the number of dB's to be added to those indicated, are shown in the window adjacent to the coarse control knob.

The coarse attenuator consists of a conventional ladder network giving a stepped attenuation while at the same time maintaining a 50-ohm output impedance. A bridged T-network is used for the fine attenuator - both ends of the series resistors being switched to provide a good v.s.w.r. The capacitors C146 to C150 connected across the shunt resistors associated with the five highest attenuation switch positions, compensate for the inductive effect exhibited by these resistors.

When the controls are moved to correspond with 126 dB, both attenuators are switched out of circuit thereby avoiding any shunting effect.

3.11 DIRECT OUTPUT

A connection between pin 7 of the turret and the DIRECT OUTPUT socket provides, in conjunction with the setting of switch S100c, two levels of output.

In the NORMAL position of the switch the output e.m.f. is the same as at the R.F. OUTPUT socket with both attenuators out of circuit. When S100c is turned to HIGH, RV104 is connected in series with the feed to the a.l.c. monitor and the level monitor, thus reducing the a.l.c. voltage and the sensitivity of the level monitor by corresponding amounts.

3.12 METER MONITORING

A panel meter continuously monitors the output from the oscillator via a thermocouple (TC102). Both c.w. and modulation reference levels are marked on the scale for use in conjunction with the SET CARRIER and SET MOD controls, in addition to the ±0.5 dB marks referred to in Section 3.10.

Fixed resistors R100, R186 and R198 set the approximate heater current flowing through the thermocouple, while RV103 provides a 'set carrier' preset adjustment. Protection of the thermocouple from possible overload damage is afforded by a limiting circuit comprising MR103, MR104 and C195 which prevents the voltage across the thermocouple exceeding 6.5 volts p-p.

3.13 POWER SUPPLIES

The instrument is designed to operate from either a.c. mains, or external h.t. (240 volts) and l.t. (6 volts) batteries.

The internal power supplies are provided by a mains transformer whose primary windings may be connected in series/parallel for 100- to 130-volt operation, or in series for 200- to 250-volt operation. Tappings on these windings permit connections to be made to suit intermediate voltages within each range.

The secondary windings LT2 and LT3 provide a.c. heater current for the valves V201, V202, V204 and also the pilot lamp PLP201; winding LT1 supplies the valves V101, V102 and V103 via full-wave rectifier MR205 and its associated smoothing and regulating circuits.

H.T. supply is obtained from the secondary winding of the mains transformer; full-wave rectification is employed using eight

bridge-connected rectifiers MR201 to MR204 and MR207 to MR210, while resistance-capacitance smoothing is effected by means of reservoir capacitor C201 and the regulator circuit.

Removing the mains input socket SKT 202 from the front panel plug PL201, and replacing it with the battery connector socket SKT 201, automatically adjusts the circuit connections to suit the d.c. inputs. The circuit adjustments are as follows :-

(1) The h.t. circuit from the cathode of V201 via pins 1 and 2 of PL201 is broken. The battery supply h.t. positive is connected to pin 1.

(2) The d.c. l.t. supply to V101, V102 and V103 is broken at pins 11 and 12, and the 6-volt battery positive supply is connected to pin 12.

(3) The earth connection is removed from the bottom of the LT3 heater winding, but remains connected to pin 10 so as to provide the common l.t./h.t. connection from the batteries. The 6-volt battery supply is applied to the heaters of V202 and V204 via the LT3 secondary winding - the voltage drop due to the resistance of the winding being negligible.

The same front panel switch S(200)A is used for both main and battery operation. The fuse FS201 protects the rectified h.t. supply only.

H. T. Regulation

The h.t. is stabilized by means of a conventional series regulation valve (V201), and an error amplifier (V202).

Error voltages are sampled at the grid of V202 via the preset resistor RV201 which forms part of a potentiometer connected across the regulated h.t. supply. The reference potential for the cathode of V202 is obtained from the tapping at the junction of R209 and the voltage reference tube V203.

A degree of forward control is effected by means of the V202 screen voltage connection via R204 to the unregulated h.t. supply, thus ensuring maximum stability against changes in mains input supply.

L. T. Regulation

The l.t. stabilizing circuit is similar in operation to the h.t. circuit, using a series element as the main regulator.

The transistor VT201 functions as the series element between the negative side of the rectifier MR101 and the common heater/chassis return circuit. Error signals are amplified by VT203 and applied to VT201 via the emitter follower VT202. Positive feedback forward control is applied to VT202 via R211; the thermistor BR201 compensates for changes in temperature, while C204 prevents instability occurring round the feedback loop.

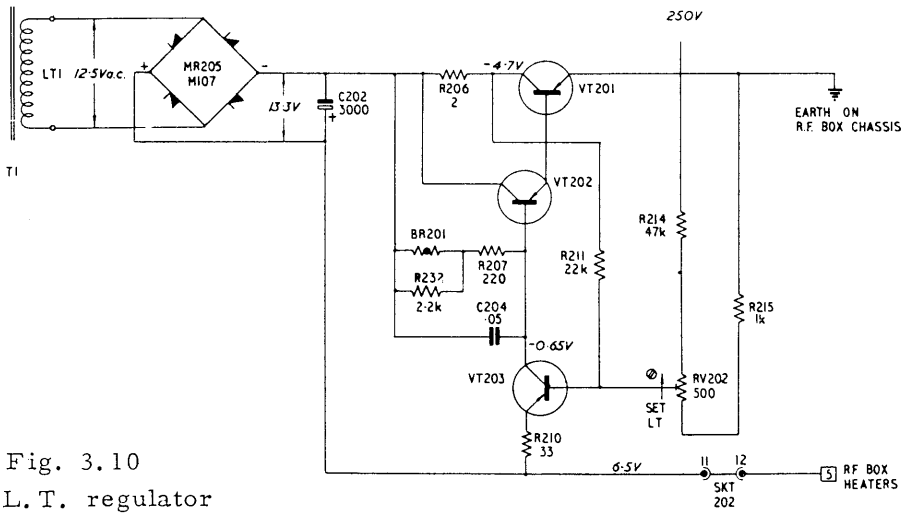

Fig. 3.10
L. T. regulator

4 MAINTENANCE

4.1 GENERAL

The maintenance information in this instruction book enables you to carry out most of the setting up, testing and repairing that may be required on this instrument.

For routine inspection of the instrument follow the instructions given in Section 4.7 - Performance Checks.

For fault location, first refer to Section 4.6 - Valve Failure and Replacement, since valves are the most likely source of trouble; Section 4.4 - Static Voltages, will also help to locate a fault, as will the routine check-out in Section 4.7. Where performance is marginal, the source of trouble can often be identified by moving to a higher primary tapping on the mains transformer, which effectively decreases the supply voltage; this may exaggerate the weakness and make it easier to trace.

Always look out for obvious signs of failure, such as cold valves, burnt-out resistors and other overheating symptoms, flash-over marks and blown fuses. Inspect for bad soldering and dry joints by noting changes in performance caused by gently tapping the joints with an insulated prod - but be careful of high voltages.

In case of difficulties that cannot be cleared by means of this instruction book, or for general advice on servicing the instrument, please write or phone our Service Department or nearest Area office. Always mention the type number and serial number of your instrument. (For addresses, see rear cover.)

If the instrument is being returned for repair please indicate clearly the nature of the fault or the work you require to be done.

4.2 MAINS INPUT ARRANGEMENT

The Generator is fitted with a mains transformer which has a double wound primary winding. The two sections may be connected either in series-parallel, or in series, depending on whether the instrument is to be used for 100- to 130-volt, or 200- to 250-volt operation. Each primary section is tapped, and the connections brought out to a voltage adjustment panel available through an aperture at the rear of the case.

Mains input adjustments are made by means of four two-pin plugs which make contact with the connections to the transformer through a reversible masking plate. This plate is annotated on one side with voltages applicable to 100- to 130-volt range, and on the other side with voltages applicable to the 200- to 250-volt range. All the possible plug combinations to suit the input voltage range covered by the instrument are shown.

The instrument is normally despatched with its mains input adjusted for 240-volt operation. To alter the input to suit the voltages within the 100- to 130-volt range, it is merely necessary to remove the four two-pin plugs, reverse the cover plate, and then replace the plugs so that their positions correspond to the appropriate diagram in Fig. 4.1.

Switch off the supply before making an adjustment. The two fixing screws that secure the tapping panel to the sub chassis are at the potential of VT201 collector which is about -5 volts d.c. relative to the main chassis.

If the plugs are stiff to remove, lubricate the pins with a thin smear of petroleum jelly.

SUPPLY VOLTAGE PANEL

Masking plate and links must be positioned according to supply voltage, as shown :-

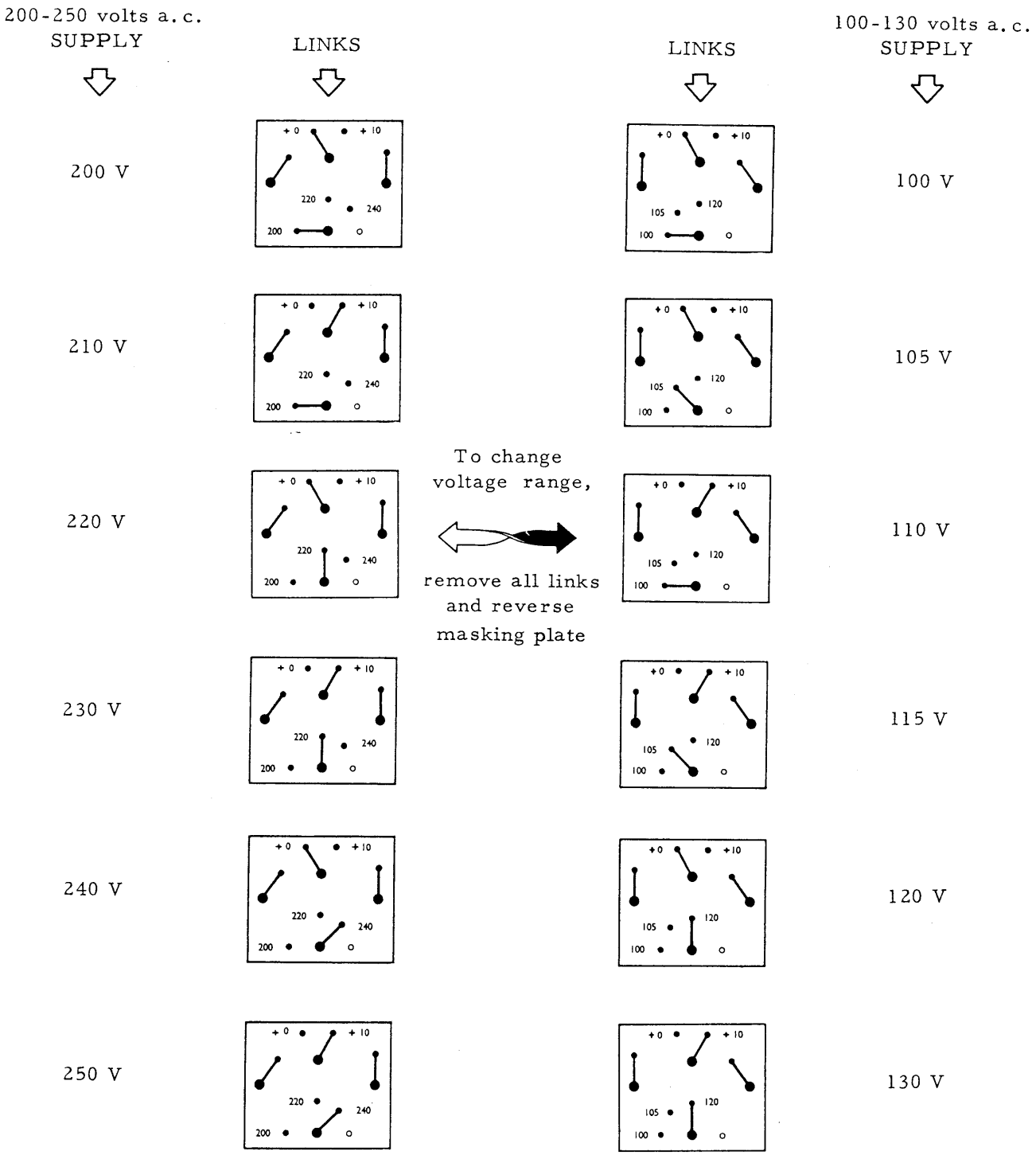

Fig. 4.1 Supply Voltage Plug Settings

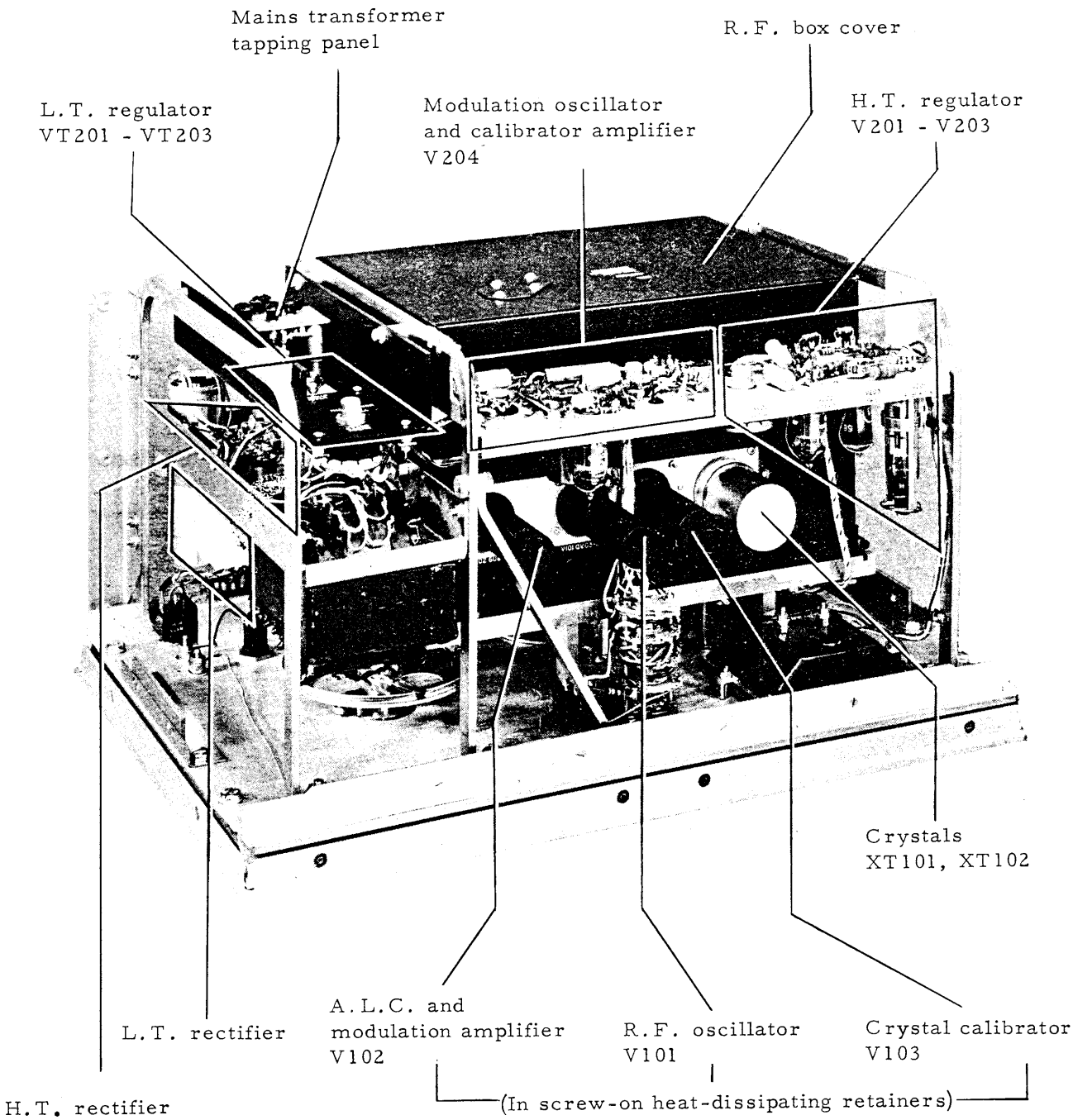

Fig. 4.2 General Arrangement of TF 144H/4

4.3 REMOVAL OF CASE —ACCESS TO COMPONENTS

(1) Lay the instrument on its face.

(2) Extract the four screws holding the rear panel and lift it out.

(3) Extract the four screws, two on each side of the case near the front.

(4) Unscrew the four feet and the two screws between them.

(5) The top and sides and the bottom panel can now be lifted away.

All valves are now accessible, and their location is shown in Fig. 4.2. All presets can be adjusted without removing the r.f. box cover; RV101, RV103 and RV104 through holes in the bottom of the cover, C144 and C192 through holes inside the crystal screening can.

R.F. BOX

To open the r.f. box remove the four cover fixing screws, two on each side, and lift off the cover. To get at many of the components it may also be necessary to remove the coil turret which can be done quite easily as follows :-

(1) Turn the turret to a position between two ranges to disengage the contacts beneath the turret. Be careful not to disturb any of the coil windings or preset controls.

(2) Undo the three screws around the drive shaft.

(3) Lift off the coil turret, watching out for the side thrust exerted by the detent spring.

To replace the turret, first make sure the drive is still between two ranges. Locate the turret so that the spigot in the shaft plate engages in the hole near the 'L' segment of the turret.

FINE ATTENUATOR

To remove the Fine Attenuator assembly :-

(1) Slacken the set-screw in the fine attenuator knob.

(2) Remove the four fixing screws of the R.F. OUTPUT socket.

(3) Remove the six fixing screws from the attenuator housing inside the r.f. box and withdraw the assembly far enough to allow its input coaxial connector to be unplugged.

(4) Completely withdraw the assembly with the output lead attached.

(5) Take off the housing after removing the four hexagon-headed screws near the rim of the housing.

When replacing the assembly note that the input lead is at the 6 o'clock position. Before tightening the set screw make sure that the dial reads 6.4 on the red scale when the switch is fully counter-clockwise.

COARSE ATTENUATOR

Replacement of resistors in the coarse attenuator is not practical. Although it is possible to get at the resistors by removing the spur gears and rear cover plate, the spring mechanism inside the attenuator will be released and can only be re-set by a procedure beyond the scope of this handbook.

4.4 STATIC VOLTAGES AND CURRENTS

The voltages on the circuit diagrams are representative of those obtained with a 20 kΩ/volt multi-range meter, such as an Avometer Model 8, set to its highest convenient range.

R.F. Box Voltages and Currents

Valve electrode voltages for V101 and V102 in the r.f. box are difficult to obtain since the presence of the test meter influences both the oscillatory conditions and the level of the a.l.c. voltage. Therefore, it is

better to rely on the current measurements given in the table below. The r.f. oscillator screen and modulator cathode voltages, however, can conveniently be checked by measuring the voltage to chassis from each side of capacitor C112. Checking the currents and voltages against the values given in the table provides a guide to the efficiency of the oscillator over any band and will help to locate discrepancies and variations in range coils.

Range	Frequency	C112 +ve	C112 -ve	R.F. Box current† (c.w. condition)
A	10 kc/s	90 V	30 V	8 mA
	20 kc/s	82 V	25 V	7 mA
B	20 kc/s	82 V	24 V	6.65 mA
	40 kc/s	75 V	20 V	5.9 mA
C	40 kc/s	86 V	29 V	7.2 mA
	80 kc/s	86 V	30 V	7.05 mA
D	80 kc/s	86 V	28 V	8 mA
	200 kc/s	80 V	24 V	7.45 mA
E	200 kc/s	76 V	18 V	6.3 mA
	535 kc/s	70 V	15 V	5.4 mA
F	535 kc/s	82 V	22 V	7.4 mA
	1605 kc/s	68 V	10 V	5.5 mA
G	1 Mc/s	89 V	31 V	8.5 mA
	2 Mc/s	86 V	21 V	6.8 mA
H	2 Mc/s	94 V	36 V	10 mA
	4 Mc/s	78 V	21 V	8.2 mA
I	4 Mc/s	125 V	62 V	13.0 mA
	8 Mc/s	100 V	30 V	9.5 mA
J	8 Mc/s	81 V	71 V	17 mA
	16 Mc/s	41 V	37 V	11.3 mA
K	16 Mc/s	81 V	71 V	19 mA
	32 Mc/s	80 V	37 V	12.8 mA
L	30 Mc/s	120 V	110 V	22 mA
	50 Mc/s	87 V	70 V	17.5 mA
	72 Mc/s	71 V	68 V	16.5 mA

† Measured by connecting a milliameter across the contacts of the CARRIER INTERRUPT switch and opening the switch.

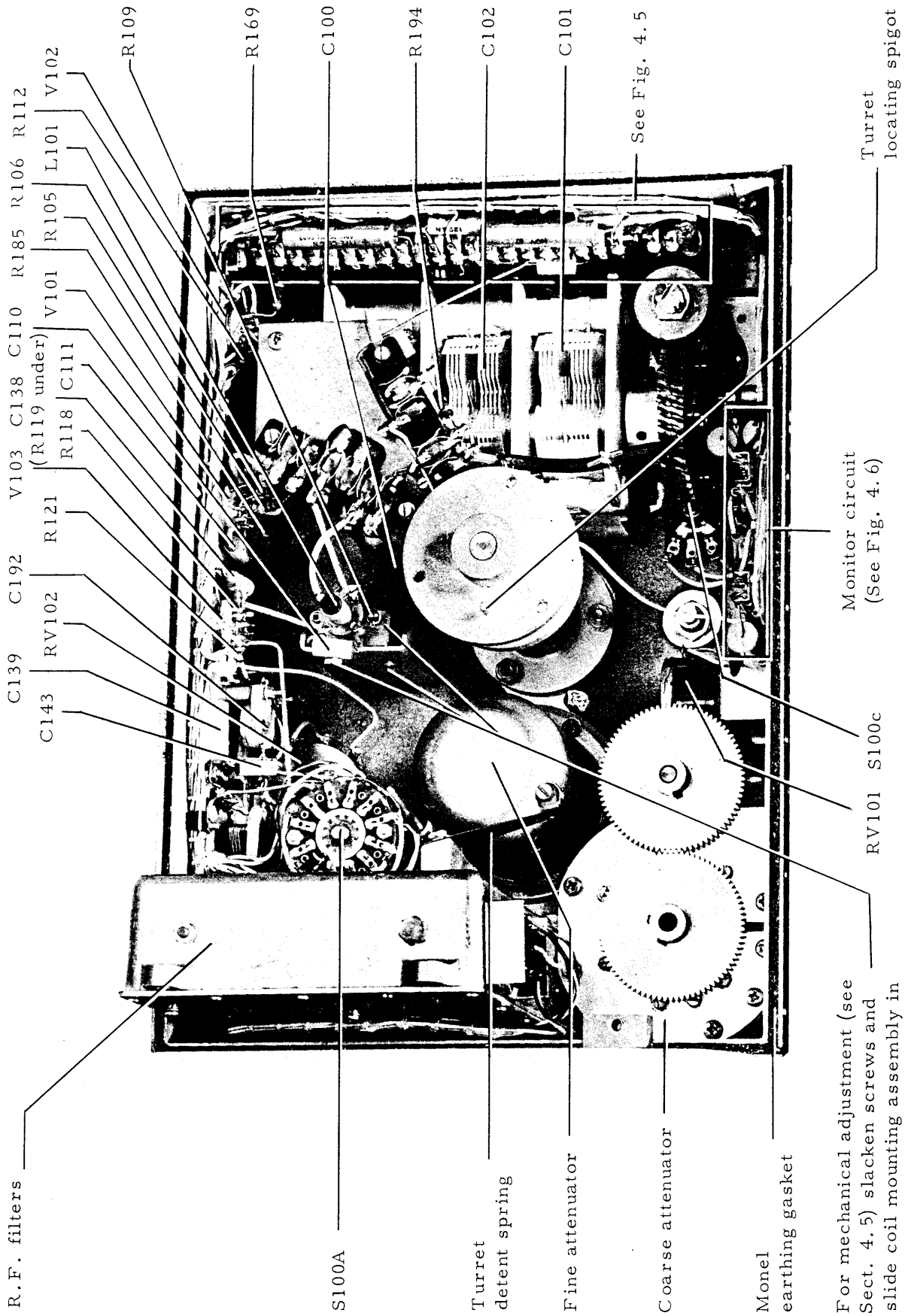

Fig. 4.3 R.F. Box interior

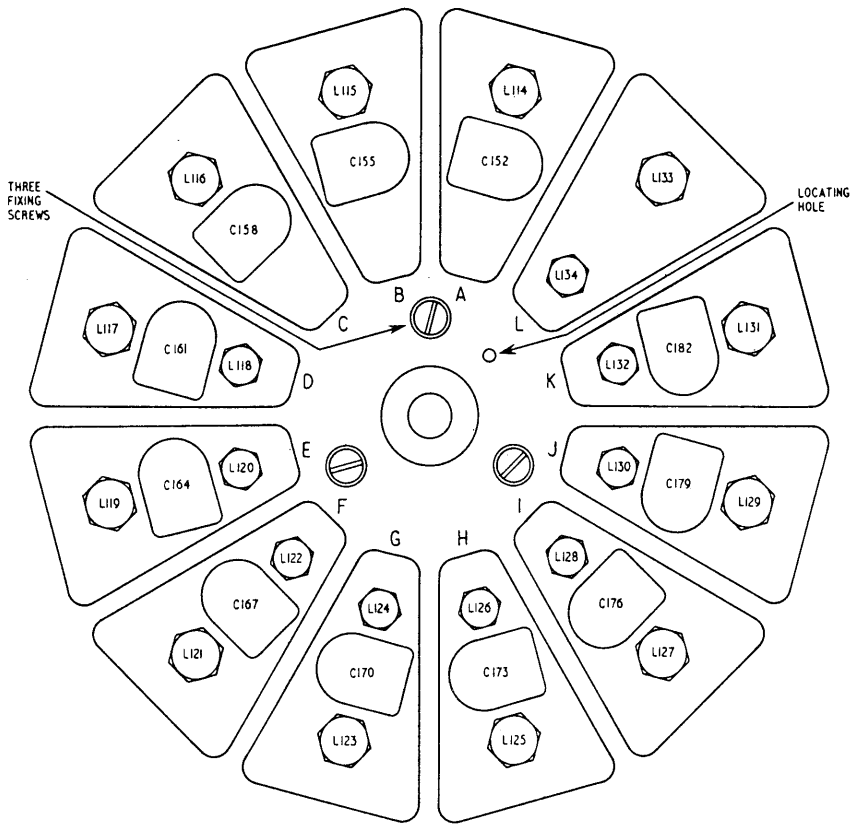

Fig. 4.4 Coil turret

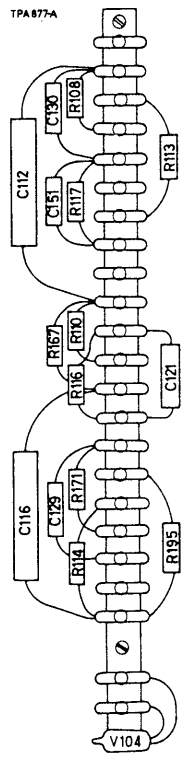

Fig. 4.5 A.L.C. & Mod. Amp. tagstrip

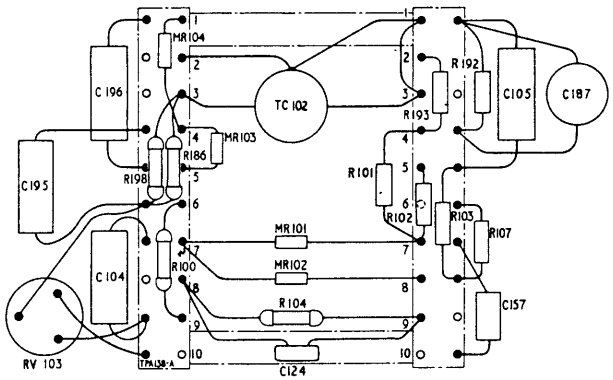

Fig. 4.6 Monitor tagstrip

4.5 VALVE FAILURE AND REPLACEMENT

If the instrument becomes faulty, valve failure is the most likely cause; to help you locate a faulty valve, the main failure symptoms for each are included in the following table. Failure of a dual-purpose valve such as V102 and V204 can be readily diagnosed if faults are noted in both of its functions. For example: absence of crystal check points would indicate failure of either V103, the crystal oscillator, or V204, the crystal calibrator amplifier; but if modulation was also absent, this would definitely point to V204 since this valve is also the modulation oscillator.

When a valve is replaced, it is advisable to use the same type as the original fitted in the instrument: this is normally, but not necessarily, the type listed in the fourth column. If the original type is not available one of the equivalent types listed should be suitable. After fitting the new valve, carry out the performance check indicated in the last column.

Do not overlook the fact that the valve-failure symptoms and readjustments required may also apply to certain of the components associated with the valve.

After replacing any of the transistors, VT201 to VT203, carry out performance check No. 1B.

Valve No.	Function	Symptom of Failure	Type	Equivalents	Check Ref.
V101	R.F. oscillator	Low output	QV03-12	5763 CV2129	2C, 4A
V102	A.L.C. and mod. amplifier	Unstable output, low or distorted modulation	6U8	ECF82 CV5065	2D
V103	Crystal oscillator	Crystal check points weak	12AU7	ECC82 B329 6067 CV491 CV4003	3A, 3B
V104	Voltage Stabilizer	Low output, ranges A - H only	3L		2C
V201	H.T. Regulator	Unstable frequency, low output	6CJ6	EL81 CV2721	1A, 1C
V202	Regulator control and mod. cathode follower	Unstable frequency, low output	6U8	ECF80 ECF82 CV5065	1A, 5B
V203	Regulator reference tube	Unstable frequency, low output	5651	85A2 QS83/3 CV2573 CV449	1A
V204	Mod. oscillator and cal. amplifier	Low modulation, crystal check points weak	6U8	ECF80 ECF82 CV5065	5B, 3C

4.6 ADJUSTMENT OF PRESETS

Many of the operating parameters are brought within close limits by means of preset controls. These controls will not normally require adjustment except following the replacement of a valve or other component. When adjustment is necessary, it must be done in accordance with the performance check specified in the table.

Circuit Ref.	Function	Check Ref. (Section 4.7)
RV101	Adjust a.l.c. voltage. WARNING: Incorrect setting can burn out thermocouple.	2D
RV103	Standardize level meter indication.	2A
RV104	Set HIGH OUTPUT	2E
RV201	Set h.t. voltage.	1A
RV202	Set d.c. heater voltage to r.f. box.	1B
L114 L115 L116 L117 L119 L121 L123 L125 L127 L129 L131 L133	Standardize main tuning dial calibration at l.f. end of each range.	4A
L118 L120 L122 L124 L126 L128 L130 L132 L134	Set frequency coverage of FINE TUNING control.	4B
C144	Set 2000 kc/s crystal frequency.	3A
C152 C155 C158 C161 C164 C167 C170 C173 C176 C179 C182 C184	Standardize main tuning dial calibration at h.f. end of each range.	4A
C192	Set 400 kc/s crystal frequency.	3A

4.7 PERFORMANCE CHECKS

The following tests cover the setting-up of all circuits in the Signal Generator and the verification of the main points of performance.

Although a setting-up procedure is included for preset components in the r.f. oscillator coil turret such adjustments require a high degree of specialized experience for satisfactory results; you are therefore recommended not to make these adjustments unless it is strictly necessary. For advice on this and other servicing matters please consult Marconi Instruments Service Department or your local Area office - the addresses are given on the back cover.

The recommended test equipment is as follows :

(a) Multimeter. GEC Selectest or Avometer Model 8.

(b) Variable transformer, to suit supply voltage; Variac or equivalent.

(c) D.C. supply, standardized at 2 and 2.3 V.

(d) Frequency counter M.I. TF 2410.

(e) Electronic voltmeter, M.I. TF 2600A.

(f) Audio oscillator, M.I. TF 1101.

(g) Oscilloscope, frequency range 20 Hz to at least 30 MHz, rise time 2 ns, amplitude measurement 0 to 25 V.

(h) A.F. Attenuator, M.I. TF 2163S.

REF & OPERATION	TEST EQUIPMENT - CONNECTIONS	CONTROL SETTINGS - CONDITIONS	MEASURE - TEST	IF INCORRECT ADJUST OR CHECK
1 POWER SUPPLY				
1A Set h.t.	(a)	Check T201 primary tap agrees with supply voltage.	Measure voltage at C206 +ve: 250 V d.c.	Adjust RV201.
1B Set l.t.	(a)	Check T201 primary tap agrees with supply voltage.	Measure voltage at Pin 5 of r.f. box tag-strip: 6.5 V d.c.	Adjust RV202.
1C H.T. and l.t. regulation.	(a) (b): connect in mains supply.	Check T201 primary tap agrees with supply voltage.	Vary supply voltage ±6%: check h.t. variation within ±0.5 V, l.t. variation within ±0.05V.	H.T.: check V201 (low emission) MR201 to MR210. L.T.: check VT201, VT202, MR205.
2 LEVEL MONITOR				
2A SET CARRIER calibration.	(c): connect 2.0 V to DIRECT OUTPUT.	RANGE control between two ranges. DIRECT OUTPUT switched to NORMAL.	Check meter reads at SET CARRIER mark. (Meter may read up to ±0.5 dB from SET CARRIER mark as RV3 can have been deliberately offset to average out the errors over the frequency range 10 kHz to 72 MHz.)	Adjust RV103.
2B SET MOD calibration.	(c): connect 2.3 V to DIRECT OUTPUT.	RANGE control between two ranges. DIRECT OUTPUT switched to NORMAL.	Check meter reads at SET MOD mark sufficiently close to maintain modulation accuracy limits over the frequency range.	Check TC102.
2C Output.	-	Select C.W., RANGE A.	Check SET CARRIER control can deflect meter reading beyond +0.5 dB mark. Repeat on all ranges.	Check setting of RV101.

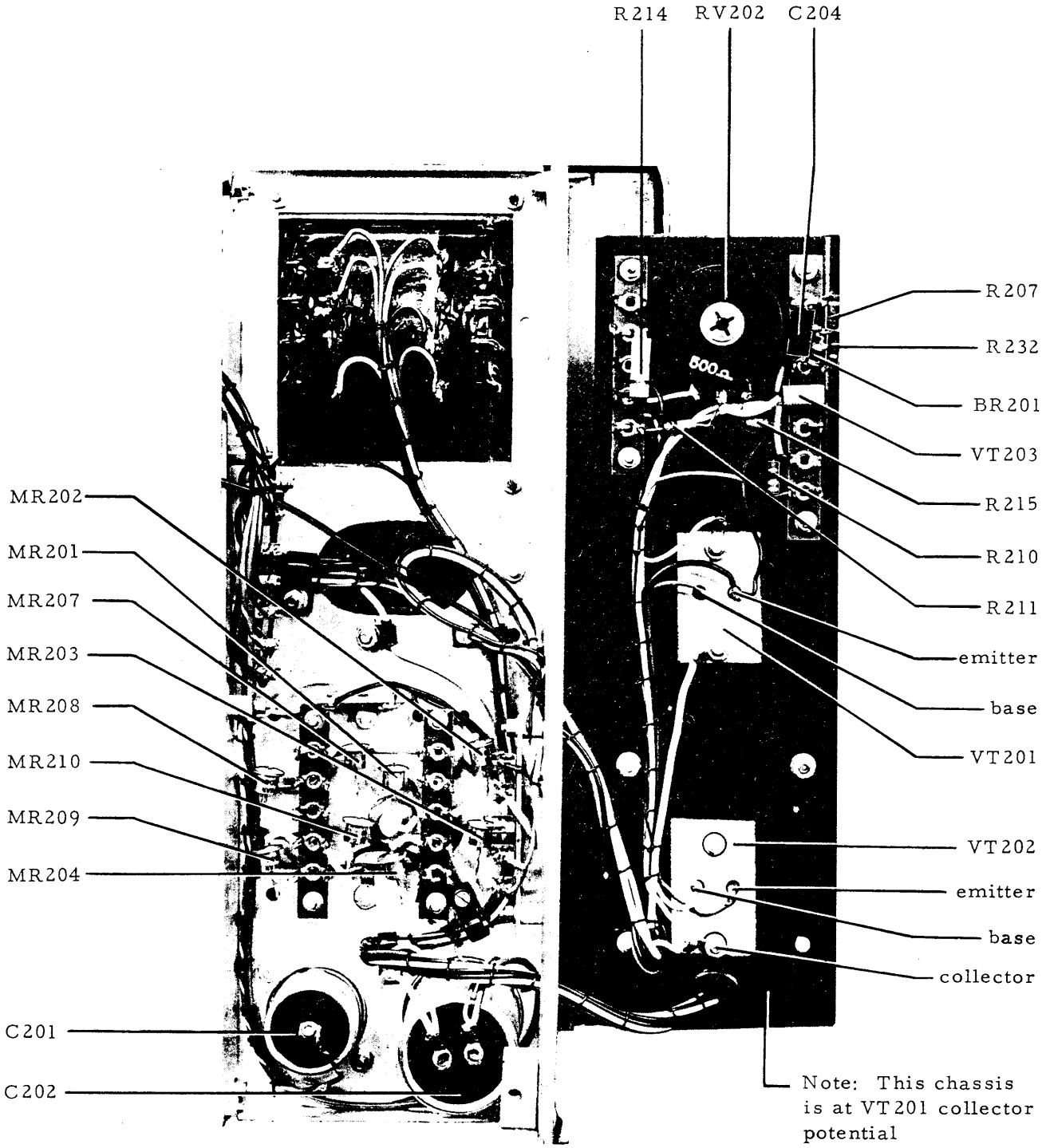

Fig. 4.7 H. T. Rectifier and l. t. regulator

REF & OPERATION	TEST EQUIPMENT - CONNECTIONS	CONTROL SETTINGS - CONDITIONS	MEASURE - TEST	IF INCORRECT ADJUST OR CHECK
2 LEVEL MONITOR (continued)				
2D A. L. C. action	-	Select C. W., RANGE D, main tuning to mid-scale. Meter to SET CARRIER.	Tune through all ranges; check meter variation within ±0.5 dB over any range and within 0.75 dB between ranges and that meter can be brought to SET CARRIER mark.	Adjust RV101 slightly.* Repeat Ref. 2C. *Turning RV101 too far clockwise may burn out thermocouple TC102.
2E Set HIGH OUTPUT	(c): connect 2.75 V to DIRECT OUTPUT.	RANGE control between two ranges. DIRECT OUTPUT switched to HIGH.	First check section 2A. Check meter reads at SET CARRIER mark.	Adjust RV104.
3 CRYSTAL CALIBRATOR				
3A Frequency	(d): couple to crystal circuit by looping wire round V103.	Select CRYSTAL CHECK (i) RANGE E (ii) RANGE A	(i) Measure frequency: 2000 kc/s. (ii) Measure frequency: 400 kc/s.	(i) Adjust C144. (ii) Adjust C192.
3B Crystal volts	(e)	Select CRYSTAL CHECK (i) RANGE E (ii) RANGE A	(i) Measure volts across XT101: 2.5 - 16 V. (ii) Measure volts across XT102: 2.5 - 16 V.	Check crystal, V103.
3C Cal. Amplifier A. G. C.	(f): apply 1 kc/s via capacitor to pin 1 of r.f. box tag-strip. (e): connect to plug in PHONES jack.	Select CRYSTAL CHECK RANGE control between two ranges.	Vary oscillator from 100 mV to 20 V and measure output at PHONES jack: 2 to 20 V.	Check MR206, V204, C208.

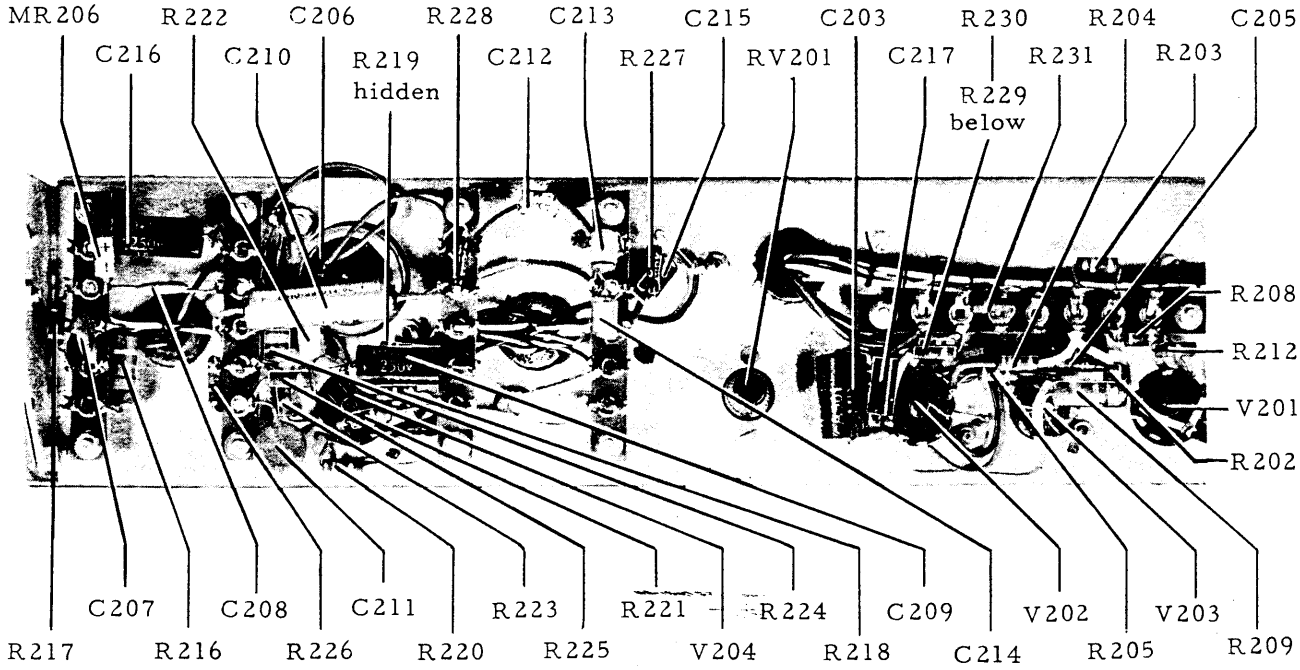

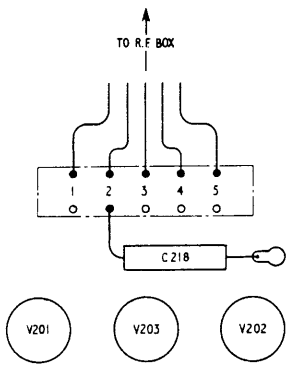

R. F. box tagstrip mounted on top of chassis

Fig. 4.8 H. T. regulator and V204 circuit

REF & OPERATION	TEST EQUIPMENT - CONNECTIONS	CONTROL SETTINGS - CONDITIONS	MEASURE - TEST	IF INCORRECT ADJUST OR CHECK
4 TUNING CONTROLS				
4A Main Tuning		Leave case on and allow 2 hour warm-up. Select C. W., CRYSTAL CHECK, and plug into PHONES jack. FINE TUNING to 0, SET CURSOR to bring cursor to arrow mark.	Tune to selected crystal check points on each range in turn and check dial accuracy is within ±1%.	At l. f. end of any band adjust appropriate coil: L114, L115 .... L133. At h. f. end adjust appropriate trimmer: C152, C155 .... C184.
4B Fine Tuning	(d): connect to R. F. OUTPUT.	Select C. W., main tuning to mid-scale.	On ranges D to L in turn check FINE TUNING control cover and accuracy.	If total cover wrong adjust appropriate coil: L118, L120 .....L134. If error asymmetric relative to 0 mark, adjust L101 mechanical setting (see Fig. 4. 3).
5 MODULATION				
5A Frequencies 400 c/s	(g): Y input to S200 Ba tag 1. (f): connect to X input.	Select 400 c/s MOD-SET.	Adjust a. f. source for Lissajous zero beat. Check frequency is 400 c/s ±5%.	Check C212, C215, R227, R228.
1000 c/s	(g): Y input to S200 Ba tag 1. (f): connect to X input.	Select 1000 c/s MOD-SET.	Adjust a. f. source for Lissajous zero beat. Check frequency is 1000 c/s ±5%.	If 400 c/s is correct, check C213, C214.

REF & OPERATION	TEST EQUIPMENT - CONNECTIONS	CONTROL SETTINGS - CONDITIONS	MEASURE - TEST	IF INCORRECT ADJUST OR CHECK
5 MODULATION (continued)				
5B Mod. Depth	(g): connect to ATTENUATED OUTPUT.	Select C. W., 400 c/s MOD-SET.	Check SET MOD control can give meter reading at SET MOD mark on ranges C to L without apparent distortion.	Check a.f. voltage across RV203 is 15 V ±10%. Check V204, V202, C210.
5C Ext. Mod. Bandwidth	(f), (h): connect oscillator via attenuator to EXT. MOD terminals. Set oscillator to 1000 c/s 10 V; attenuator to 10 dB. (e): connect to C112 +ve.	Set % MOD for convenient voltmeter reading.	Keep oscillator output constant; vary frequency from 20 c/s to 20 kc/s and note that attenuator adjustment needed to keep voltmeter reading constant does not exceed ±1.2 dB.	Check filter response by transferring voltmeter to junction C127/R128.

REPLACEABLE PARTS

Introduction

One or more of the components fitted in this instrument may differ from those listed in this chapter for any of the following reasons :

(a) Components indicated by † have their value selected during test to achieve particular performance limits.

(b) Owing to supply difficulties, components of different value or type may be substituted provided the overall performance of the instrument is maintained.

(c) As part of a policy of continuous development, components may be changed in value or type to obtain detail improvements in performance.

When there is a difference between the component fitted and the one listed, always use as a replacement the same type and value as found in the instrument.

Ordering

When ordering replacements, address the order to our Service Division (address on rear cover) or nearest agent and specify the following for each component required.

(1) Type* and serial number of instrument.

(2) Complete circuit reference.

(3) Description.

(4) MI code number.

Component references

The components are listed in alphanumerical order and the following abbreviations are used :

BR	:	brimistor
Carb	:	carbon
Cer	:	ceramic
Elec	:	electrolytic
FS	:	fuse
L	:	inductor
M	:	meter
Max	:	maximum
Met	:	metal
Min	:	minimum
MR	:	semi-conductor diode
Ox	:	oxide
Pap	:	paper dielectric
PL	:	plug
Plas	:	plastic dielectric
R	:	resistor
S	:	switch
SKT	:	socket
T	:	transformer
TC	:	thermocouple
TH	:	thermistor
TP	:	terminal
V	:	valve
Var	:	variable
VT	:	transistor
W	:	watts at 70 °C
WW	:	wire wound
XT	:	crystal
†	:	value selected during test, nominal value listed
Ø	:	feed through component

* as given on the serial number label at the rear of the instrument; if this is superseded by a model number label, quote the model number instead of the type number.

Circuit reference	Description	M.I. code
BR201	Type CZ3	25683-644G
C100	Cer 0.01μF +80-20% 500V	26383-392E
C101, C102, C103	3-gang variable	44438-012N
C104	Pap 0.1μF 10% 350V	26174-172V
C105	Pap 0.1μF 10% 350V	26174-172V
C106	Cer Ø 4700pF +80-20% 500V	26373-665Z
C107	Pap 0.1μF 10% 350V	26174-173S
C108	Cer Ø 4700pF +80-20% 500V	26373-665Z
C109	Cer Ø4700pF +80-20% 500V	26373-681V
C110	Cer 47pF 10% 750V	26322-835L
C111	Cer 47pF 10% 750V	26322-835L
C112	Elec 1μF +50-20% 275V	26452-101N
C113	Cer Ø 4700pF +80-20% 500V	26373-665Z
C114	Cer Ø 4700pF +80-20% 500V	26373-665Z
C115	Cer Ø4700pF +80-20% 500V	26373-681V
C116	Elec 1μF +50 -20% 275V	26452-101N
C117	Cer Ø 4700pF +80-20% 500V	26373-665Z
C118	Pap 0.1μF 10% 350V	26174-173S
C119	Cer Ø 4700pF +80-20% 500V	26373-665Z
C120	Cer Ø4700pF +80-20% 500V	26373-681V
C121	Cer 120pF 10% 750V	26322-905L
C122	Pap 1000pF 10% 500V	26174-125H
C123	Cer Ø 200pF 20% 500V	26333-568H
C124	Cer 10pF ±0.5pF 750V	26324-085F
C125	Pap 2000pF 10% 350V	26174-129N
C126	Cer Ø 200pF 20% 500V	26333-568H
C127	Cer Ø 200pF 20% 500V	26333-568H
C128	Pap 1000pF 10% 500V	26174-125H
C129	Pap 0.01μF 10% 400V	26174-147M
C130	Cer 1000pF +40-20% 500V	26383-242P
C131	Pap 0.01μF 10% 630V	26555-463S
C132	Cer Ø 200pF 20% 500V	26333-568H
C133	Cer 470pF 10% 500V	26361-031W
C134	Pap 0.02μF 10% 400V	26512-208D
C135	Cer Ø 200pF 20% 500V	26333-568H
C136	Cer Ø200pF 20% 500V	26332-568H
C137	Pap 0.01μF 10% 630V	26555-463S
C138	Cer 4.7pF 10% 750V	26321-052Z
C139	Pap 0.1μF 10% 350V	26174-172V
C140	Cer Ø 4700pF +80-20% 500V	26373-665Z
C141	Cer Ø 4700pF +80-20% 500V	26373-665Z
C142	Cer Ø 4700pF +80-20% 500V	26373-681V
C143	Cer 270pF 10% 500V	26361-009A
C144	Var 2-19pF 500V	26812-293Z
C145	Cer 470pF 10% 500V	26361-031W
C146	Cer 4.7pF 10% 750V	26324-055K
C147	Cer 10pF 10% 750V	26324-080U
C148	Cer 22pF 10% 750V	26324-153L
C149	Cer 18pF 10% 750V	26324-802E
C150	Cer 30pF 10% 750V	26324-817T
C151	Cer 4.7pF 10% 750V	26321-052Z
C152	Var 4-20.5pF 500V	26812-295E
C153	Cer 82pF 5% 750V	26322-984P
C155	Var 4-20.5pF 500V	26812-295E
C156	Cer 91pF 5% 750V	26322-986M
C158	Var 4-20.5pF 500V	26812-295E
C159	Cer 82pF 5% 750V	26322-984P
C160	Pap 200pF 20% 600V	26174-116C
C161	Var 4-20.5pF 500V	26812-295E

For symbols and abbreviations see introduction to this chapter

Circuit reference	Description	M.I. code
C163	Cer 1000pF +80-20% 500V	26383-242P
C164	Var 4-20.5pF 500V	26812-295E
C166	Cer 1000pF +80-20% 500V	26383-242P
C167	Var 4-20.5pF 500V	26812-295E
C169	Cer 1000pF +80-20% 500V	26383-242P
C170	Var 4-20.5pF 500V	26812-295E
C171	Cer 91pF 5% 750V	26322-986M
C172	Cer 1000pF +80-20% 500V	26383-242P
C173	Var 4-20.5pF 500V	26812-295E
C174	Cer 91pF 5% 750V	26322-986M
C175	Cer 220pF +40-20% 500V	26383-206T
C176	Var 4-20.5pF 500V	26812-295E
C177	Cer 82pF 5% 750V	26322-984P
C178	Cer 220pF +40-20% 500V	26383-206T
C179	Var 4-20.5pF 500V	26812-295E
C180	Cer 100pF 5% 750V	26322-988R
C181	Cer 470pF +40-20% 500V	26383-223E
C182	Var 4-20.5pF 500V	26812-295E
C183	Cer 10pF 5% 750V	26322-779M
C184	Var 2-11pF 500V	26812-207V
C185	Plas 150pF 5% 350V	26516-290X
C187	Cer 0.01μF +80-20% 500V	26383-392E
C188	Cer 0.01μF +80-20% 500V	26383-392E
C189	Cer 0.01μF +80-20% 500V	26383-392E
C190	Cer 0.01μF +80-20% 500V	26383-392E
C191	Cer 0.005μF 20% 500V	26383-373W
C192	Var 10-60pF 350V	26847-469S
C193	Cer 10pF 5% 750V	26322-779M
C194	Cer 10pF 5% 750V	26322-779M
C195	Pap 0.1μF 10% 350V	26174-172V
C196	Pap 0.1μF 10% 350V	26174-172V
C197	Cer 18pF 10% 750V	26324-802
C198	Cer 10pF 20% 500V	26343-120

Circuit reference	Description	M.I. code
C201	Elec 50μF +50-20% 500V	26417-669A
C202	Elec 3000μF +100-20% 25V	26427-806B
C203	Pap 0.25μF 10% 350V	26174-176T
C204	Pap 0.05μF 10% 350V	26174-166J
C205	Pap 0.1μF 20% 250V	26174-172V
C206	Elec 33μF +50-20% 450V	26417-656W
C207	Cer 0.01μF +80-20% 500V	26383-392E
C208	Cer 0.01μF +80-20% 500V	26383-392E
C209	Pap 0.1μF 10% 350V	26174-172V
C210	Elec 1μF +50-20% 275V	26452-101N
C211	Cer 0.01μF +80-20% 500V	26383-392E
C212	Plas 3300pF 2% 125V	26516-609Z
C213	Plas 2200pF 2% 125V	26516-564X
C214	Plas 2200pF 2% 125V	26516-564X
C215	Plas 3300pF 2% 125V	26516-609Z
C216	Pap 0.1μF 20% 250V	26174-172V
C217	Pap 0.05μF 10% 350V	26174-166J
C218	Elec 1μF +50-20% 275V	26452-101N
FS201	HT fuse, 500mA	23411-256W
	Fuse-holder for FS201	23416-202Z
FS202	Mains fuse, 2A	23411-260D
	Fuse-holder for FS202	23416-202Z
JK201	PHONES jack	23421-681K
L101	Fine tuning coil	44243-003N
L102	Filter coil	44262-014N
L103	Filter coil	44262-014N

For symbols and abbreviations see introduction to this chapter

Circuit reference	Description	M.I. code
L104	Filter coil	44271-401H
L105	Filter coil	44271-401H
L106	Filter coil	44255-001H
L107	Filter coil	44255-001H
L108	Filter coil	44273-602C
L109	Filter coil	44273-602C
L110	Filter coil	44277-802F
L111	Filter coil	44277-802F
L112	Filter coil	44277-801J
L113	Filter coil	44277-801J
L114	Range A tuning coil	44278-602A
L115	Range B tuning coil	44276-605N
L116	Range C tuning coil	44274-203T
L117	Range D tuning coil	44272-203M
L118	Filter coil	44254-002P
L119	Range E tuning coil	44268-207S
L120	Filter coil	44254-002P
L121	Range F tuning coil	44266-216B
L122	Filter coil	44254-002P
L123	Range G tuning coil	44262-013Y
L124	Filter coil	44266-216B
L125	Range H tuning coil	44252-004B
L126	Filter coil	44254-002P
L127	Range I tuning coil	44236-011X
L128	Filter coil	44254-002P
L129	Range J tuning coil	44226-021A
L130	Filter coil	44254-002P
L131	Range K tuning coil	44226-020K
L132	Filter coil	44254-002P
L133	Range L tuning coil	44224-902M
L134	Filter coil	44254-002P
L135	Filter coil	44243-203H
M201	Meter for TF 144H/4 or H/4R	44563-401C

Circuit reference	Description	M.I. code
M201	Meter for TF 144H/4S or H/6S	44547-001C
MR101	Diode type HP2800	28349-007E
MR102	Diode type HP2800	28349-007E
MR103	Diode type HP5082-2800	28349-007E
MR104	Diode type HP5082-2800	28349-007E
MR201	Diode type XU604 (1N540)	28357-048W
MR202	Diode type XU604 (1N540)	28357-048W
MR203	Diode type XU604 (1N540)	28357-048W
MR204	Diode type XU604 (1N540)	28357-048W
MR205	Bridge rectifier type M107	28314-783V
MR206	Diode type CG63H	28323-021M
MR207	Diode type XU604 (1N540)	28357-048W
MR208	Diode type XU604 (1N540)	28357-048W
MR209	Diode type XU604 (1N540)	28357-048W
MR210	Diode type XU604 (1N540)	28357-048W
PL201	12-pin (mains/battery)	23435-232D
	Adaptor for PL201 (for TF 144H/4S, & -/6S)	45168-006N
PLP201	6.3V, 0.15A	23735-433F
	Lamp holder, with bezel and lens	23746-302A
R100	Carb 50Ω 1% ¼W	24132-500Z
R101	Met film 100kΩ 2% ¼W	24773-321L
R102	Met film 1kΩ 2% ¼W	24773-273A
R103	Met film 1kΩ 2% ¼W	24773-273A
R104	Carb 50Ω 1% ¼W	24132-500Z
R105	Met film 10Ω 2% ¼W	24773-225W
R106	Met film 10Ω 2% ¼W	24773-225W
R107	Met ox 1MΩ 2% ½W	24573-145T

For symbols and abbreviations see introduction to this chapter

Circuit reference	Description	M.I. code	Circuit reference	Description	M.I. code
R108	Met film 22kΩ 2% ¼W	24773-305R	R143	Met film 96.25Ω 1% ¼W	24762-582S
R109	Carb 10MΩ 10% ¼W	24322-991Z	R144	Met film 142.3Ω 1% ¼W	24762-614F
R110	Met ox 10kΩ 2% ¼W	24773-297M	R145	Met film 6.2 Ω 1% ¼W	24762-504U
R111	Met film 33kΩ 2% ¼W	24773-309Z	R146	Met film 13Ω 1% ¼W	24762-513G
R112 †	Met film 180kΩ 2% ¼W	24773-327W	R147	Met film 20Ω 1% ¼W	24762-518T
R113	Carb 1MΩ 1% ¼W	24137-100W	R148	Met film 30Ω 1% ¼W	24762-526R
R114	Met ox 47kΩ 7% TE 3/8W	24552-126W	R149	Met film 39Ω 1% ¼W	24762-530B
R115	Met film 910Ω 2% ¼W	24773-272K	R150	Met film 50Ω 1% ¼W	24762-558R
R116	Met ox 100kΩ 7% TE 3/8W	24552-135C	R151	Met film 62Ω 1% ¼W	24762-563K
R117	Carb 1MΩ 1% ¼W	24137-100W	R152	Met film 75Ω 1% ¼W	24762-567E
R118	Met film 22kΩ 2% ¼W	24773-305R	R153	Met film 91Ω 1% ¼W	24762-584D
R119	Met ox 1MΩ 2% ½W	24573-145T	R154	Met film 110Ω 1% ¼W	24762-605E
R120	Met ox 1MΩ 2% ½W	24573-145T	R155	Met film 50Ω 1% ¼W	24762-558R
R121	Met film 33kΩ 2% ¼W	24773-309Z	R156	Met film 50Ω 1% ¼W	24762-558R
R122	Met film 96.3Ω 1% ¼W	24762-582S	R157	Met film 400Ω 1% ¼W	24762-641U
R123	Met film 142.3Ω 1% ¼W	24762-614F	R158	Met film 200Ω 1% ¼W	24762-624P
R124	Met film 96.3Ω 1% ¼W	24762-582S	R159	Met film 120Ω 1% ¼W	24762-608N
R125	Met film 142.3Ω 1% ¼W	24762-614F	R160	Met film 82Ω 1% ¼W	24762-569Y
R126	Met film 96.25Ω 1% ¼W	24762-582S	R161	Met film 62Ω 1% ¼W	24762-563K
R127	Met film 142.3Ω 1% ¼W	24762-614F	R162	Met film 50Ω 1% ¼W	24762-558R
R128	Met film 96.25Ω 1% ¼W	24762-582S	R163	Met film 39Ω 1% ¼W	24762-530B
R129	Met film 142.3Ω 1% ¼W	24762-614F	R164	Met film 39Ω 1% ¼W	24762-530B
R130	Met film 96.25Ω 1% ¼W	24762-582S	R165	Met film 27Ω 1% ¼W	24762-525C
R131	Met film 142.3Ω 1% ¼W	24762-614F	R166	Met film 24Ω 1% ¼W	24762-522P
R132	Met film 96.25Ω 1% ¼W	24762-582S	R167	Met ox 100kΩ 7% TE 3/8W	24552-135C
R133	Met film 142.3Ω 1% ¼W	24762-614F	R168	Met film 22kΩ 2% ¼W	24773-305R
R134	Met film 96.25Ω 1% ¼W	24762-582S	R169	Met ox 4.7kΩ 7% TE 3/8W	24552-100P
R135	Met film 142.3Ω 1% ¼W	24762-614F	R170	Met film 10kΩ 2% ¼W	24773-297M
R136	Met film 96.25Ω 1% ¼W	24762-582S	R171	Met ox 100kΩ 7% TE 3/8W	24552-135C
R137	Met film 142.3Ω 1% ¼W	24762-614F	R172	Met film 10kΩ 2% ¼W	24773-297M
R138	Met film 228Ω 1% ¼W	24762-629B	R173	Met film 4.7kΩ 2% ¼W	24773-289W
R139	Met film 63.3Ω 1% ¼W	24762-564A	R174	Met film 4.7kΩ 2% ¼W	24773-289W
R140	Met film 70.5Ω 1% ¼W	24762-561R	R175	Met film 4.7kΩ 2% ¼W	24773-289W
R141	Met film 65.8Ω 1% ¼W	24762-565Z	R176	Met film 4.7kΩ 2% ¼W	24773-289W
R142	Met film 142.3Ω 1% ¼W	24762-614F	R177	Met film 4.7kΩ 2% ¼W	24773-289W

For symbols and abbreviations see introduction to this chapter

Circuit reference	Description	M.I. code
R178	Met film 4.7kΩ 2% ¼W	24773-289W
R179	Met film 4.7kΩ 2% ¼W	24773-289W
R180	Met film 3.9kΩ 2% ¼W	24773-287V
R181	Met film 4.7kΩ 2% ¼W	24773-289W
R182	Carb 1MΩ 10% ½W	24343-998R
R183	Met film 4.7kΩ 2% ¼W	24773-289W
R184	Met film 4.7kΩ 2% ¼W	24773-289W
R185	Met film 100Ω 2% ¼W	24773-249J
R186	Carb 50Ω 1% ¼W	24132-500Z
R187	Met film 4.7kΩ 2% ¼W	24773-289W
R188	Met film 47kΩ 2% ¼W	24773-313H
R189	Met film 22kΩ 2% ¼W	24773-305R
R190	Met film 22kΩ 2% ¼W	24773-305R
R191	Met film 10kΩ 2% ¼W	24773-297M
R192	Met film 22kΩ 2% ¼W	24773-305R
R193	Carb 2.2MΩ 10% ¼W	24322-974K
R194	Met film 10Ω 2% ¼W	24773-225W
R195	Met film 47Ω 2% ¼W	24773-241A
R196 †	Met film 100Ω 2% ¼W	24773-249J
R197	Met film 1kΩ 2% ¼W	24773-273A
R198 †	Met film 150Ω 2% ¼W	24773-253F
R201	Met ox 10Ω 2% ½W	24573-025E
R202	Met film 100Ω 2% ¼W	24773-249J
R203	Carb 470kΩ 5% ¼W	24232-152L
R204	Carb 330kΩ 5% ¼W	24232-148N
R205	Met film 47kΩ 2% ¼W	24773-313H
R206	WW 2Ω 5% 4.5W	25126-702W
R207	Met film 220Ω 2% ¼W	24773-257W
R208	Met film 4.7Ω 2% ¼W	24773-289W
R209	Met ox 47kΩ 5% 1W	24585-166Y
R210	Met film 33Ω 2% ¼W	24773-237K
R211	Met film 22kΩ 2% ¼W	24773-305R
R212	Met ox 150kΩ 7% TE 3/8W	24552-139A
R213	Met ox 68kΩ 7% TE 3/8W	24552-131T
R214	Met ox 47kΩ 5% 2W	24587-266A
R215	Met ox 1kΩ 7% TE 3/8W	24552-080Y
R216	Met ox 22kΩ 5% 1W	24585-158A
R217	Carb 4.7MΩ 10% ¼W	24322-982M
R218	Carb 470kΩ 5% ¼W	24232-152L
R219	Met film 2.2kΩ 2% ¼W	24773-281Y
R220	Met film 3.3kΩ 2% ¼W	24773-285F
R221	Met ox 100kΩ 7% TE 3/8W	24552-135C
R222	WW 10kΩ 5% 3W	25125-110R
R223	Met film 150Ω 2% ¼W	24773-253F
R224	Met film 22kΩ 5% 1W	24585-158A
R225	Met film 2.2kΩ 2% ¼W	24773-281Y
R226	Met film 1MΩ 2% ½W	24573-145T
R227	Carb 120kΩ 10% ¼W	24342-137N
R228	Carb 120kΩ 10% ¼W	24342-137N
R229	Carb 470kΩ 5% ¼W	24232-152L
R230	Met film 2.2kΩ 2% ¼W	24773-281Y
R232	Met film 2.2kΩ 2% ¼W	24773-281Y
R233	WW 33Ω 5% 1.5W	25123-033C
R234	Met film 2.7kΩ 2% ¼W	24773-283L
R235	Met film 2.7kΩ 2% ¼W	24773-283L
RV101	Var WW 30kΩ 10% 2W	25817-635Y
RV102	Var WW 5kΩ 10% 1W	25815-348Z
RV103	Var carb 1kΩ 20% ¼W	25611-172S
RV104	Var carb 100Ω 20% ¼W	25611-166F
RV201	Var WW 30kΩ 10% 2W	25817-635Y
RV202	Var WW 500Ω 10% 1W	25815-303D
RV203	Var WW 50kΩ 10% 1W	25815-385E
RV204	Var WW 50kΩ 10% 1W	25815-385E

For symbols and abbreviations see introduction to this chapter

Circuit reference	Description	M.I. code
S(100)A	FREQ RANGE	44340-067N
S(100)B	OUTPUT EMF (fine)	44340-066Y
S(100)C	DIRECT OUTPUT	44321-125Y
S(200)A	SUPPLY	44334-003K
S(200)B	Function selector	44340-068L
S(200)C	INTERRUPT CARRIER	44334-002B
SKT101	BNC socket, DIRECT OUTPUT	23443-413Z
	Cap and chain for SKT101	23443-581A
SKT103	BNC socket, RF OUTPUT	23443-377E
T201	Mains input transformer	43465-009U
TC102	Type VHF	44312-001B
TH201	Type A15	25683-272D
TP201	EXT MOD terminal	23235-176V
TP202	E terminal	23235-177S
V101	Tetrode, type QV03-12	28144-207U
	B9a holder for V101, with screw-on screening can	28237-294N
	Earthing gasket, to fit under V101 can	31511-413K
V102	Triode pentode, type 6U8 (ECF82)	28154-732V
	B9A holder for V102, with screw-on screening can	28237-294N
	Earthing gasket to fit under V102 can	31511-413K
V103	Double triode, type 12AU7 (ECC82)	28124-402J
	B9A holder for V103, with screw-on screening can	28237-294N
	Earthing gasket, to fit under V103 can	31511-413K

Circuit reference	Description	M.I. code
V104	Neon, type 3L	23733-102C
V201	Pentode, type 6CJ6 (EL81)	28154-297K
	Holder for V201, type B9A	28237-170T
	Retainer for V201, including spring	28237-107L
	Top cap connector for V201	28237-426Y
V202	Triode pentode, type 6U8 (ECF82)	28154-727F
	Holder for V202, type B9A	28237-170T
	Retainer for V202	28237-707L
V203	Voltage reference tube, type 85A2	28216-237E
	Holder for V203, type B7G	28237-125J
	Retainer for V203	28237-170T
V204	Triode pentode, type 6U8 (ECF82)	28154-727F
	Holder for V204, type B9A	28237-170T
	Retainer for V204	28237-707L
VT201	Type MJ491	28435-876Z
VT202	Type MJ491	28435-876Z
	Mica washer and two nylon bushes for VT202	28488-110H
VT203	Type OC71	28423-737Z
X1	Ferrite bead	41372-006
X2	Ferrite bead	41372-006
X3	Ferrite bead	41372-006
XT101	2MHz	28311-710B
	Holder for XT101	28313-604X
	Clip to retain XT101	35527-710R
XT102	400 kHz	28311-650G
	Holder for XT102	28313-604X
	Clip to retain XT102	35527-710R
	Screening can for crystals (drilled)	35616-105E

For symbols and abbreviations see introduction to this chapter

Circuit reference	Description	M.I. code

MISCELLANEOUS

Main tuning control

Tuning dial 190mm ($7\frac{1}{2}$in) dia. blank	33234-514Y
Range cursor	31181-408K
Window for tuning dial	37567-103Y
Knob 31142-710M	
Logging scale dial	31761-310X
Cursor for logging scale	31185-712V
Earthing spring for tuning dial spindle	35637-408S
Wire drive assembly, complete with end ferrules	41335-005X

Fine tuning control

Dial, blank	33243-533F
Cursor	31185-712V
Knob	31145-101V

Frequency range control

Knob	31145-505L
Chain drive type 94	22737-001F

Output e.m.f. controls

Dial	31764-708X
Cursor	31185-703Y
Knob for fine attenuator	31142-504K
Knob for coarse attenuator	31145-101V
Function selector knob	31145-102S
SET CARRIER knob	31145-102S
SET MOD knob	31145-102S

% MOD control

Dial	31761-311M
Cursor	31185-712V
Knob	31142-504K

Turret contact strip assembly (with 6 spring fingers)	46316-013R
Turret contact strip assembly (with 4 spring fingers)	44316-014H
Turret detent spring	35481-105T
Ball-race for detent spring	22644-377N
Earthing gasket, monel-metal mesh, for r.f. box cover	11880-202P
Mains tapping panel assembly with plugs	43226-007X
Insulating spacer, supporting l.t. regulator chassis	37542-405S
Insulating washer, for l.t. regulator chassis screws	37482-223J
Instrument case (top and sides)	41651-603F
Instrument case (bottom)	41626-013N
Instrument case (back)	41636-036Z
Front panel surround	41656-028B
Dust cover, for TF 144H/4R	35663-704V
Cover plate for access to transformer tapping panel	51663-012
Captive screw (for cover plate)	33554-506
Plastic cover	35766-724P
Panel rail for TF 144H/4R	35134-117Y
Panel pillar for TF 144H/4S, -H/6S	33522-705M
Case foot	41181-007P
Lifting foot	35121-105V

For symbols and abbreviations see introduction to this chapter

NOTES

1. COMPONENT VALUES

Resistor : No suffix = ohms. K = kilohms. M = megohms;
Capacitors : No suffix = microfarads. p = picofarads.
* Value selected during test; nominal value shown.

2. VOLTAGES

These are d.c. and relative to chassis except where otherwise indicated.
Voltmeter : 20 kΩ/V model on highest convenient range
(X) : switched to CRYSTAL CHECK
(M) : switched to any MOD position

3. SYMBOLS

- ⊘ preset component
- ↑ arrow indicates clockwise rotation of knob
- EXT panel marking
- ⊡ connections on r.f. box tagstrip
- ⊸ supply plug and socket connections.
  SKT201 : battery socket
  SKT202 : a.c. mains socket

4. SWITCHES

Rotary switches are drawn schematically. Numbers indicate control knob setting.

S200B

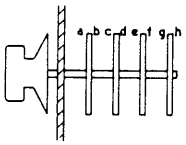

Sequence of sections

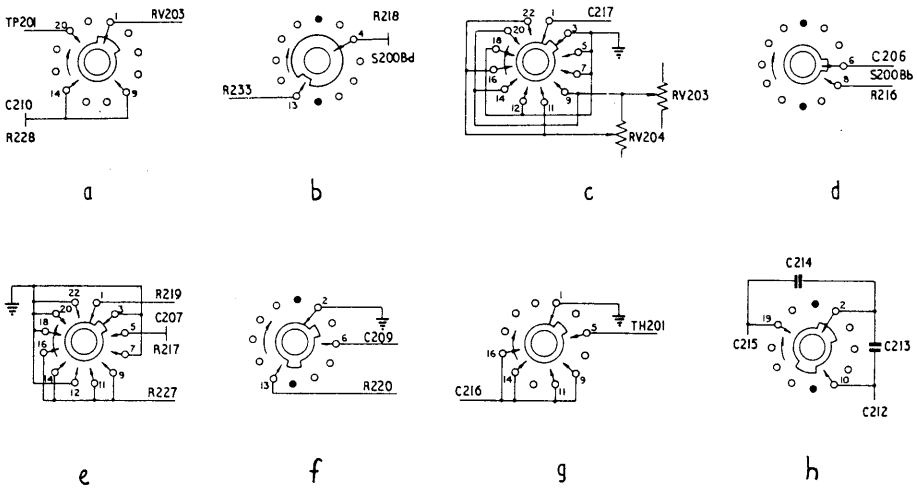

Plan of sections viewed from knob end with knob fully counter-clockwise.

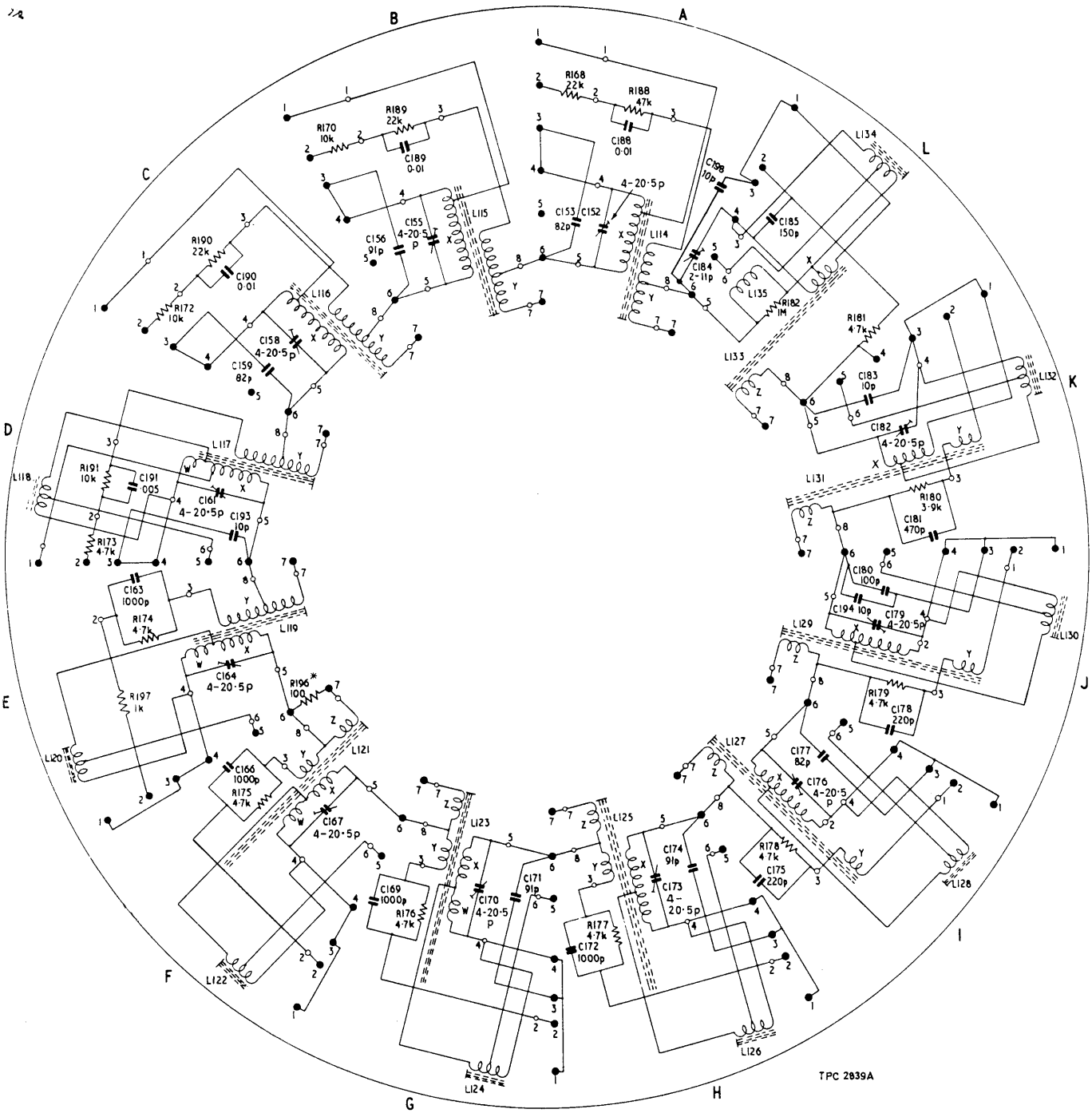

Fig 4.10 COIL TURRET

NOTES

1. COMPONENT VALUES

Resistors : No suffix = ohms. k = kilohms. M = megohms.
Capacitors : No suffix = microfarads. p = picofarads.
*Value selected during test; nominal value shown.

2. VOLTAGES

These are d.c. and relative to chassis except where otherwise indicated.
Voltmeter : 20 kΩ/V model on highest convenient range
(A) : Range A with meter at SET CARRIER
(A-F) : Ranges A - F.
(G-L) : Ranges G - L.

3. SYMBOLS

⊘ preset component
↑ arrow indicates clockwise rotation of knob
EXT panel marking
⊡ connections on r.f. box tagstrip

4. SWITCHES

Rotary switches are drawn schematically. Numbers or letters, indicate control knob setting.

S100A

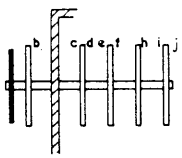

Sequence of sections.

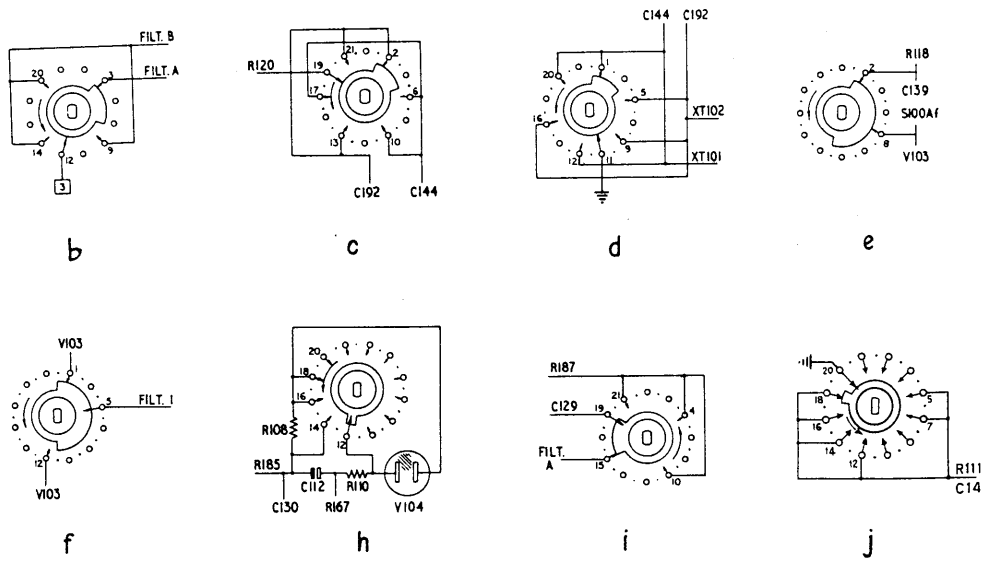

Plan of sections viewed from knob end with knob fully counter-clockwise.

DECIBEL CONVERSION TABLE

Ratio Down			Ratio Up	
VOLTAGE	*POWER*	*DECIBELS*	*VOLTAGE*	*POWER*
1·0	1·0	**0**	1·0	1·0
·9886	·9772	**·1**	1·012	1·023
·9772	·9550	**·2**	1·023	1·047
·9661	·9333	**·3**	1·035	1·072
·9550	·9120	**·4**	1·047	1·096
·9441	·8913	**·5**	1·059	1·122
·9333	·8710	**·6**	1·072	1·148
·9226	·8511	**·7**	1·084	1·175
·9120	·8318	**·8**	1·096	1·202
·9016	·8128	**·9**	1·109	1·230
·8913	·7943	**1·0**	1·122	1·259
·8710	·7586	**1·2**	1·148	1·318
·8511	·7244	**1·4**	1·175	1·380
·8318	·6918	**1·6**	1·202	1·445
·8128	·6607	**1·8**	1·230	1·514
·7943	·6310	**2·0**	1·259	1·585
·7762	·6026	**2·2**	1·288	1·660
·7586	·5754	**2·4**	1·318	1·738
·7413	·5495	**2·6**	1·349	1·820
·7244	·5248	**2·8**	1·380	1·905
·7079	·5012	**3·0**	1·413	1·995
·6683	·4467	**3·5**	1·496	2·239
·6310	·3981	**4·0**	1·585	2·512
·5957	·3548	**4·5**	1·679	2·818
·5623	·3162	**5·0**	1·778	3·162
·5309	·2818	**5·5**	1·884	3·548
·5012	·2512	**6**	1·995	3·981
·4467	·1995	**7**	2·239	5·012
·3981	·1585	**8**	2·512	6·310
·3548	·1259	**9**	2·818	7·943
·3162	·1000	**10**	3·162	10·000
·2818	·07943	**11**	3·548	12·59
·2512	·06310	**12**	3·981	15·85
·2239	·05012	**13**	4·467	19·95
·1995	·03981	**14**	5·012	25·12
·1778	·03162	**15**	5·623	31·62

DECIBEL CONVERSION TABLE (continued)

Ratio Down			Ratio Up	
VOLTAGE	*POWER*	*DECIBELS*	*VOLTAGE*	*POWER*
·1585	·02512	**16**	6·310	39·81
·1413	·01995	**17**	7·079	50·12
·1259	·01585	**18**	7·943	63·10
·1122	·01259	**19**	8·913	79·43
·1000	·01000	**20**	10·000	100·00
·07943	$6{\cdot}310 \times 10^{-3}$	**22**	12·59	158·5
·06310	$3{\cdot}981 \times 10^{-3}$	**24**	15·85	251·2
·05012	$2{\cdot}512 \times 10^{-3}$	**26**	19·95	398·1
·03981	$1{\cdot}585 \times 10^{-3}$	**28**	25·12	631·0
·03162	$1{\cdot}000 \times 10^{-3}$	**30**	31·62	1,000
·02512	$6{\cdot}310 \times 10^{-4}$	**32**	39·81	$1{\cdot}585 \times 10^{3}$
·01995	$3{\cdot}981 \times 10^{-4}$	**34**	50·12	$2{\cdot}512 \times 10^{3}$
·01585	$2{\cdot}512 \times 10^{-4}$	**36**	63·10	$3{\cdot}981 \times 10^{3}$
·01259	$1{\cdot}585 \times 10^{-4}$	**38**	79·43	$6{\cdot}310 \times 10^{3}$
·01000	$1{\cdot}000 \times 10^{-4}$	**40**	100·00	$1{\cdot}000 \times 10^{4}$
$7{\cdot}943 \times 10^{-3}$	$6{\cdot}310 \times 10^{-5}$	**42**	125·9	$1{\cdot}585 \times 10^{4}$
$6{\cdot}310 \times 10^{-3}$	$3{\cdot}981 \times 10^{-5}$	**44**	158·5	$2{\cdot}512 \times 10^{4}$
$5{\cdot}012 \times 10^{-3}$	$2{\cdot}512 \times 10^{-5}$	**46**	199·5	$3{\cdot}981 \times 10^{4}$
$3{\cdot}981 \times 10^{-3}$	$1{\cdot}585 \times 10^{-5}$	**48**	251·2	$6{\cdot}310 \times 10^{4}$
$3{\cdot}162 \times 10^{-3}$	$1{\cdot}000 \times 10^{-5}$	**50**	316·2	$1{\cdot}000 \times 10^{5}$
$2{\cdot}512 \times 10^{-3}$	$6{\cdot}310 \times 10^{-6}$	**52**	398·1	$1{\cdot}585 \times 10^{5}$
$1{\cdot}995 \times 10^{-3}$	$3{\cdot}981 \times 10^{-6}$	**54**	501·2	$2{\cdot}512 \times 10^{5}$
$1{\cdot}585 \times 10^{-3}$	$2{\cdot}512 \times 10^{-6}$	**56**	631·0	$3{\cdot}981 \times 10^{5}$
$1{\cdot}259 \times 10^{-3}$	$1{\cdot}585 \times 10^{-6}$	**58**	794·3	$6{\cdot}310 \times 10^{5}$
$1{\cdot}000 \times 10^{-3}$	$1{\cdot}000 \times 10^{-6}$	**60**	1,000	$1{\cdot}000 \times 10^{6}$
$5{\cdot}623 \times 10^{-4}$	$3{\cdot}162 \times 10^{-7}$	**65**	$1{\cdot}778 \times 10^{3}$	$3{\cdot}162 \times 10^{6}$
$3{\cdot}162 \times 10^{-4}$	$1{\cdot}000 \times 10^{-7}$	**70**	$3{\cdot}162 \times 10^{3}$	$1{\cdot}000 \times 10^{7}$
$1{\cdot}778 \times 10^{-4}$	$3{\cdot}162 \times 10^{-8}$	**75**	$5{\cdot}623 \times 10^{3}$	$3{\cdot}162 \times 10^{7}$
$1{\cdot}000 \times 10^{-4}$	$1{\cdot}000 \times 10^{-8}$	**80**	$1{\cdot}000 \times 10^{4}$	$1{\cdot}000 \times 10^{8}$
$5{\cdot}623 \times 10^{-5}$	$3{\cdot}162 \times 10^{-9}$	**85**	$1{\cdot}778 \times 10^{4}$	$3{\cdot}162 \times 10^{8}$
$3{\cdot}162 \times 10^{-5}$	$1{\cdot}000 \times 10^{-9}$	**90**	$3{\cdot}162 \times 10^{4}$	$1{\cdot}000 \times 10^{9}$
$1{\cdot}000 \times 10^{-5}$	$1{\cdot}000 \times 10^{-10}$	**100**	$1{\cdot}000 \times 10^{5}$	$1{\cdot}000 \times 10^{10}$
$3{\cdot}162 \times 10^{-6}$	$1{\cdot}000 \times 10^{-11}$	**110**	$3{\cdot}162 \times 10^{5}$	$1{\cdot}000 \times 10^{11}$
$1{\cdot}000 \times 10^{-6}$	$1{\cdot}000 \times 10^{-12}$	**120**	$1{\cdot}000 \times 10^{6}$	$1{\cdot}000 \times 10^{12}$
$3{\cdot}162 \times 10^{-7}$	$1{\cdot}000 \times 10^{-13}$	**130**	$3{\cdot}162 \times 10^{6}$	$1{\cdot}000 \times 10^{13}$
$1{\cdot}000 \times 10^{-7}$	$1{\cdot}000 \times 10^{-14}$	**140**	$1{\cdot}000 \times 10^{7}$	$1{\cdot}000 \times 10^{14}$

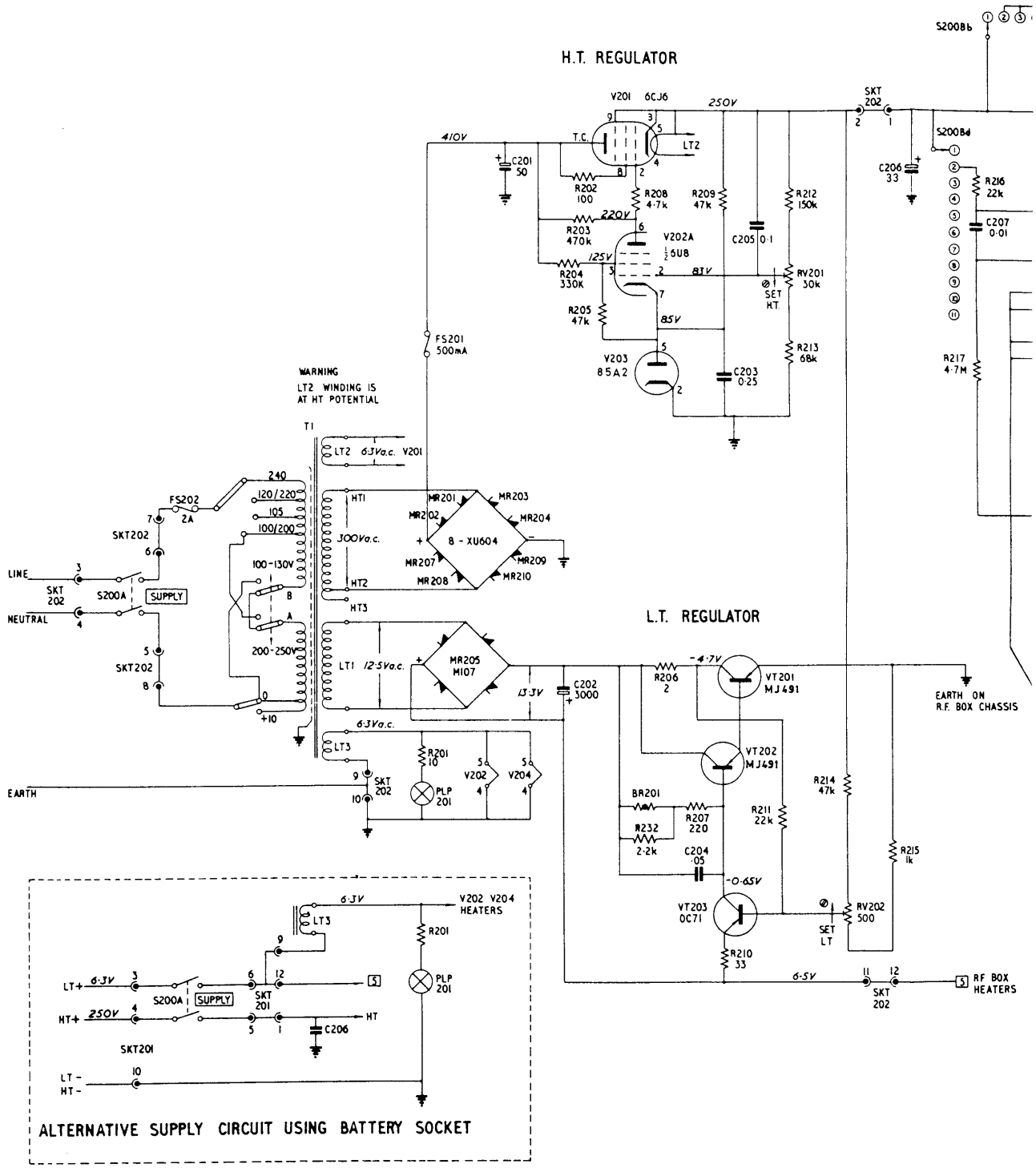
H.T. REGULATOR
L.T. REGULATOR
V201 6CJ6
T.C.
LT2
250V
410V
C201 50
R202 100
R208 4·7k
R209 47k
R212 150k
R203 470k
220V
V202A ½6U8
C205 0·1
125V
R204 330K
81V
RV201 30k
SET H.T.
R205 47k
85V
V203 85A2
C203 0·25
R213 68k
FS201 500mA
WARNING
LT2 WINDING IS AT HT POTENTIAL
T1
LT2 6·3Va.c. V201
240
120/220
105
100/200
FS202 2A
SKT202
LINE
SKT 202
S200A
SUPPLY
NEUTRAL
100-130V
200-250V
+10
HT1
HT2
HT3
300Va.c.
MR201
MR202
MR203
MR204
MR207
MR208
MR209
MR210
8 - XU604
LT1 12·5Va.c.
MR205 M107
13·3V
C202 3000
6·3Va.c.
LT3
R201 10
PLP 201
V202
V204
SKT 202
EARTH
R206 2
-4·7V
VT201 MJ491
VT202 MJ491
BR201
R207 220
R232 2·2k
C204 ·05
R211 22k
R214 47k
R215 1k
-0·65V
VT203 OC71
RV202 500
SET LT
R210 33
6·5V
RF BOX HEATERS
EARTH ON R.F. BOX CHASSIS
S200Bb
S200Bd
SKT 202
C206 33
R216 22k
C207 0·01
R217 4·7M
6·3V
V202 V204 HEATERS
LT+ 6·3V
HT+ 250V
SKT 201
C206
HT
SKT201
LT -
HT -
ALTERNATIVE SUPPLY CIRCUIT USING BATTERY SOCKET

144H/II (1g)

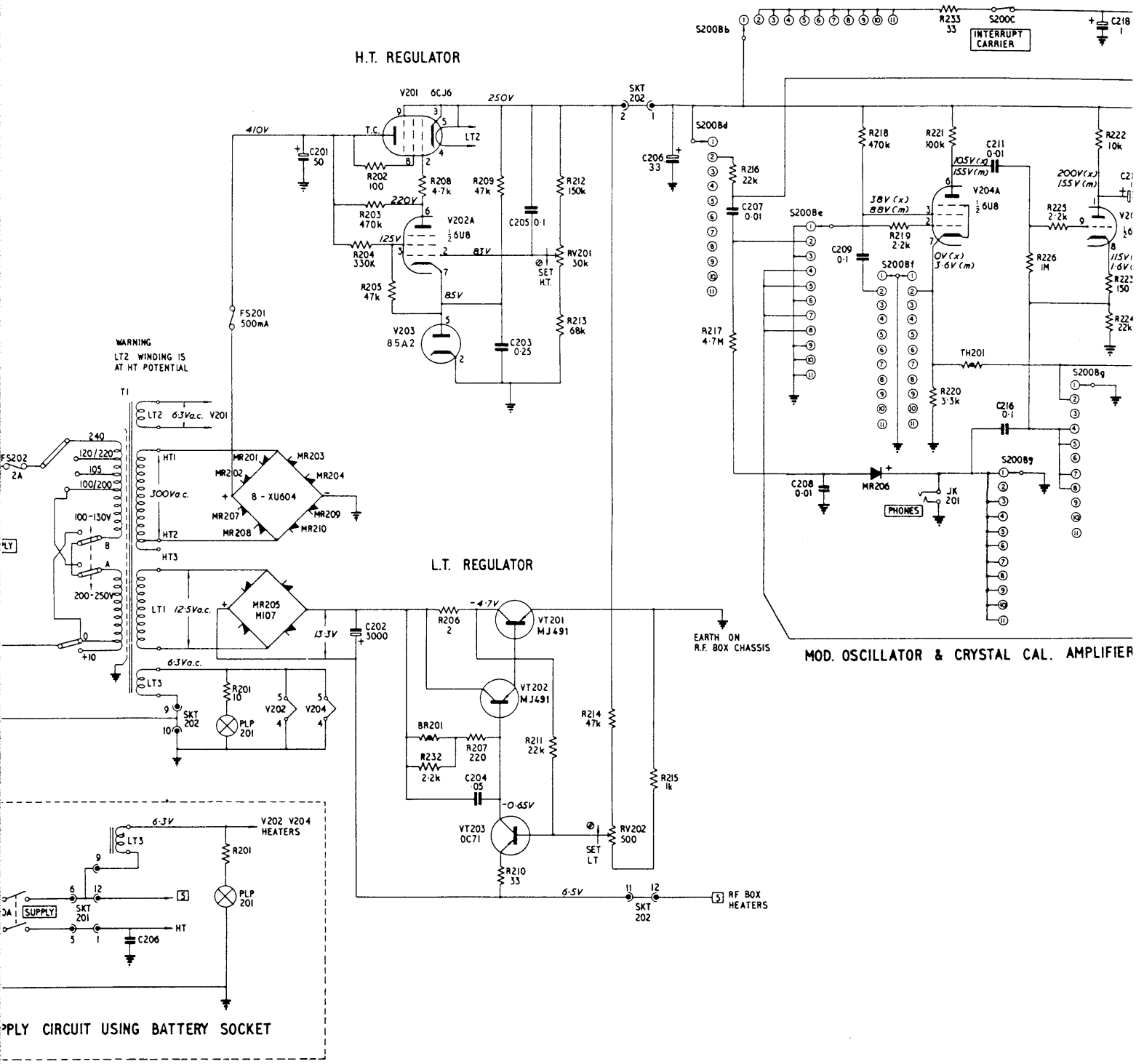
H.T. REGULATOR
V201 6CJ6
250V
410V
T.C.
LT2
C201 50
R202 100
R208 4·7k
R209 47k
R212 150k
R203 470k
220V
V202A ½6U8
C205 0·1
R204 330K
125V
8V
RV201 30k
SET H.T.
R205 47k
85V
V203 85A2
C203 0·25
R213 68k
FS201 500mA
WARNING
LT2 WINDING IS AT HT POTENTIAL
T1
LT2 6·3Va.c. V201
240
120/220
105
100/200
100-130V
200-250V
FS202 2A
HT1
300Va.c.
HT2
HT3
MR201
MR202
MR203
MR204
MR205
MR206
MR207
MR208
MR209
MR210
8 - XU604
LT1 12·5Va.c.
MR205 M107
13·3V
C202 3000
6·3Va.c.
LT3
R201 10
PLP 201
SKT 202
V202
V204
L.T. REGULATOR
-4·7V
R206 2
VT201 MJ491
VT202 MJ491
BR201
R207 220
R232 2·2k
C204 ·05
R211 22k
R214 47k
R215 1k
-0·65V
VT203 OC71
RV202 500
SET LT
R210 33
6·5V
SKT 202
RF BOX HEATERS
EARTH ON R.F. BOX CHASSIS
6·3V
V202 V204 HEATERS
SUPPLY
SKT 201
HT
C206
PPLY CIRCUIT USING BATTERY SOCKET
S200B6
R233 33
S200C
INTERRUPT CARRIER
C218 1
SKT 202
C206 33
S200Bd
R216 22k
C207 0·01
R217 4·7M
R218 470k
R221 100k
C211 0·01
105V(x) 155V(m)
V204A ½6U8
38V(x) 88V(m)
R219 2·2k
0V(x) 3·6V(m)
C209 0·1
S200Be
S200Bf
R220 3·3k
TH201
C216 0·1
C208 0·01
MR206
JK 201
PHONES
S200Bg
R222 10k
200V(x) 155V(m)
R225 2·2k
R226 1M
R224 22k
MOD. OSCILLATOR & CRYSTAL CAL. AMPLIFIER

Fig. 4·

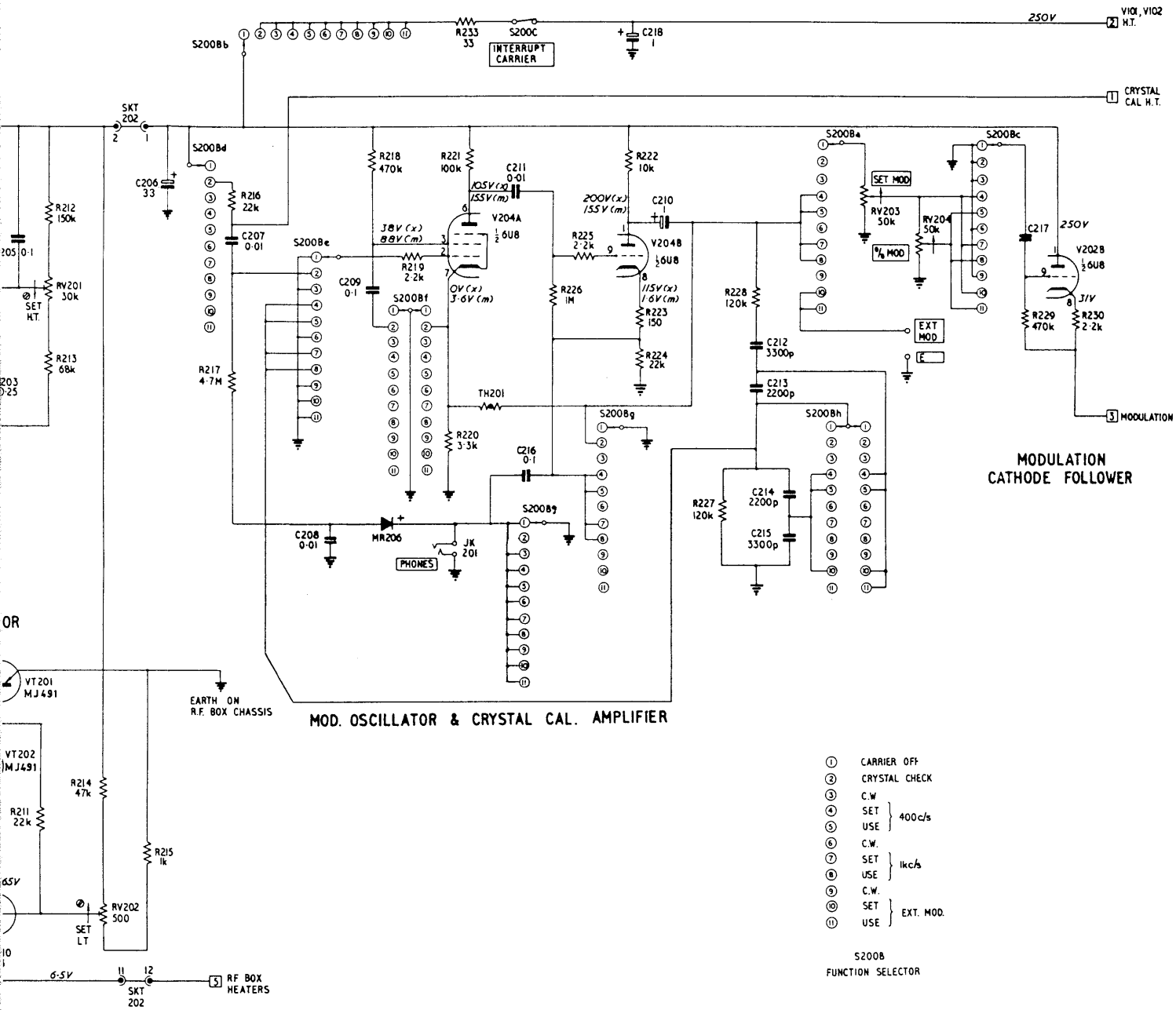

Fig. 4·9 POWER SUPPLY AND MODULATION OSCILLATOR

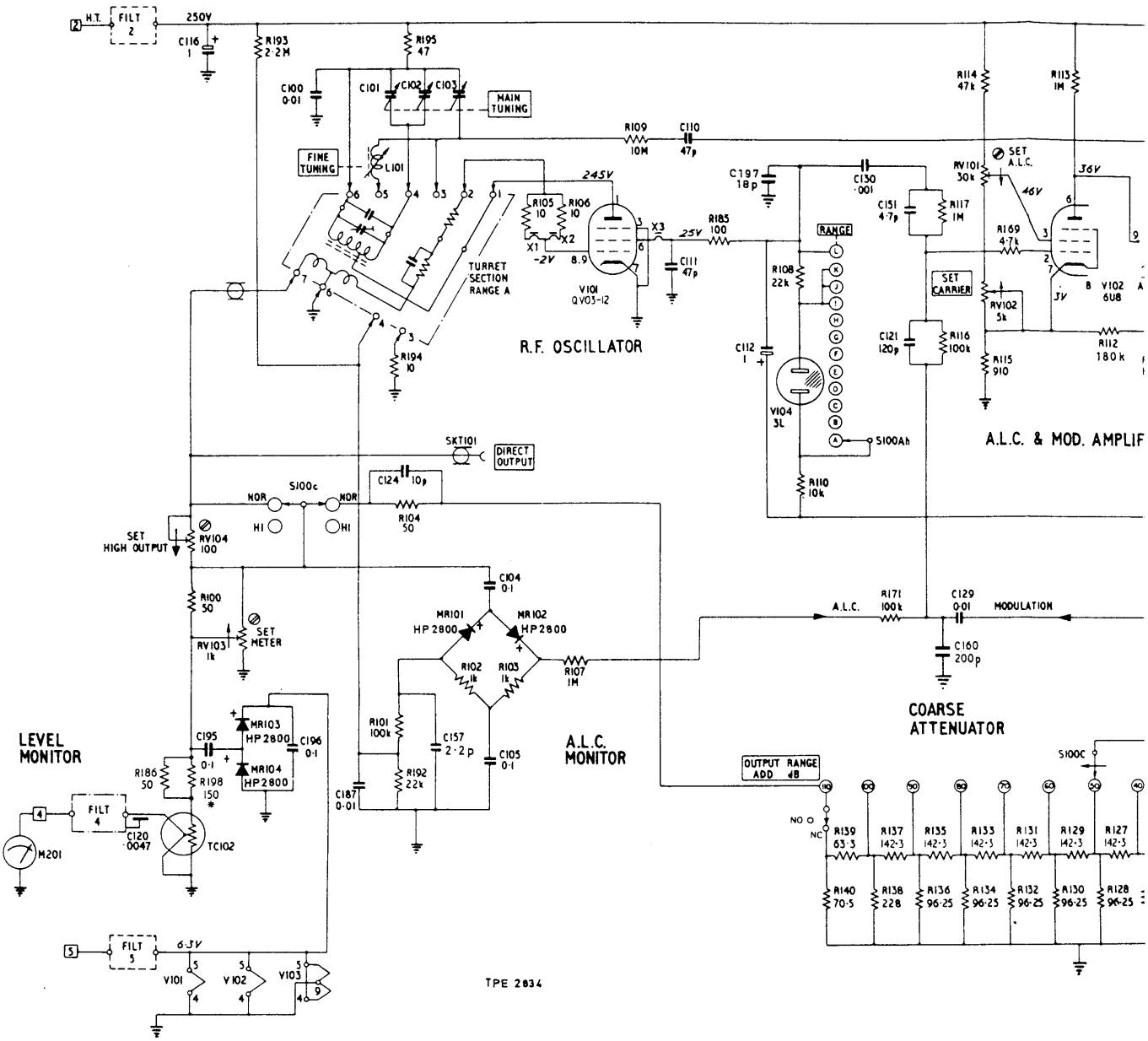

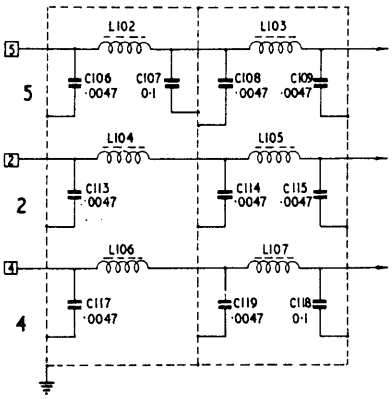

FILTERS 5,2,4

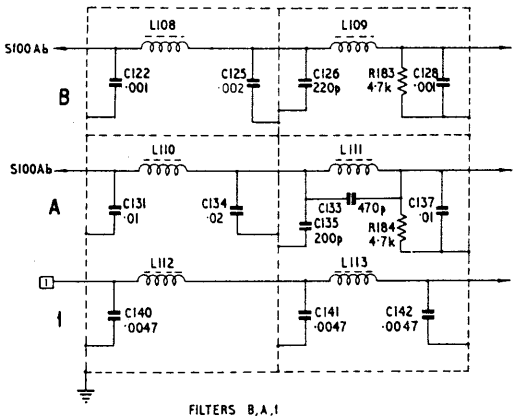

FILTERS B,A,1

144H/II (1h)

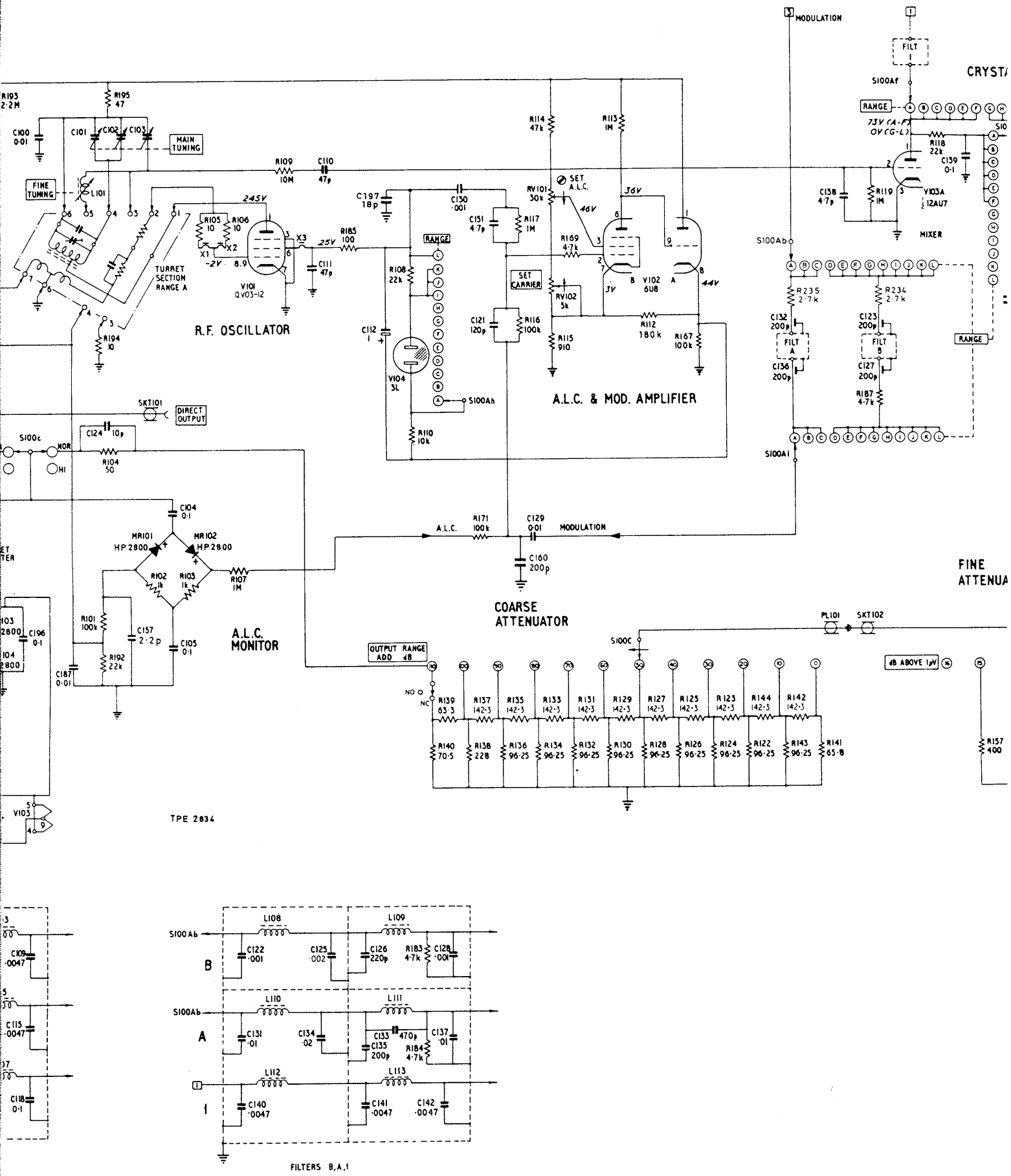
MODULATION
FILT
S100Af
CRYSTA
RANGE
73V (A-F)
0V (G-L)
R118 22k
C139 0·1
V103A ½ 12AU7
MIXER
C138 4·7p
R119 1M
S100Ab
R235 2·7k
R234 2·7k
C132 200p
C123 200p
FILT A
FILT B
C136 200p
C127 200p
R187 4·7k
RANGE
S100Al
R195 47
C100 0·01
C101
C102
C103
MAIN TUNING
FINE TUNING
L101
R109 10M
C110 47p
R114 47k
R113 1M
RV101 30k
SET A.L.C.
36V
46V
R169 4·7k
RV102 5k
V102 6U8
44V
R112 180k
R167 100k
R115 910
C197 18p
C130 ·001
C151 4·7p
R117 1M
SET CARRIER
C121 120p
R116 100k
R105 10
R106 10
245V
X3
25V
R185 100
C111 47p
-2V
8.9
V101 QV03-12
TURRET SECTION RANGE A
R194 10
R108 22k
C112 1
V104 3L
S100Ah
R110 10k
R.F. OSCILLATOR
A.L.C. & MOD. AMPLIFIER
SKT101
DIRECT OUTPUT
S100c
NOR
HI
C124 10p
R104 50
C104 0·1
MR101 HP2800
MR102 HP2800
R102 1k
R103 1k
R107 1M
R101 100k
C157 2·2p
R192 22k
C105 0·1
C187 0·01
A.L.C. MONITOR
A.L.C.
R171 100k
C129 0·01
MODULATION
C160 200p
COARSE ATTENUATOR
FINE ATTENUA
PL101
SKT102
S100C
OUTPUT RANGE ADD 4B
NO
NC
R139 63·3
R137 142·3
R135 142·3
R133 142·3
R131 142·3
R129 142·3
R127 142·3
R125 142·3
R123 142·3
R144 142·3
R142 142·3
R140 70·5
R138 228
R136 96·25
R134 96·25
R132 96·25
R130 96·25
R128 96·25
R126 96·25
R124 96·25
R122 96·25
R143 96·25
R141 65·8
dB ABOVE 1μV
R157 400
V103
TPE 2834
C109 ·0047
C115 ·0047
C118 0·1
S100Ab
L108
L109
B
C122 ·001
C125 ·002
C126 220p
R183 4·7k
C128 ·001
L110
L111
A
C131 ·01
C134 ·02
C133 470p
C135 200p
R184 4·7k
C137 ·01
L112
L113
1
C140 ·0047
C141 ·0047
C142 ·0047
FILTERS B,A,1

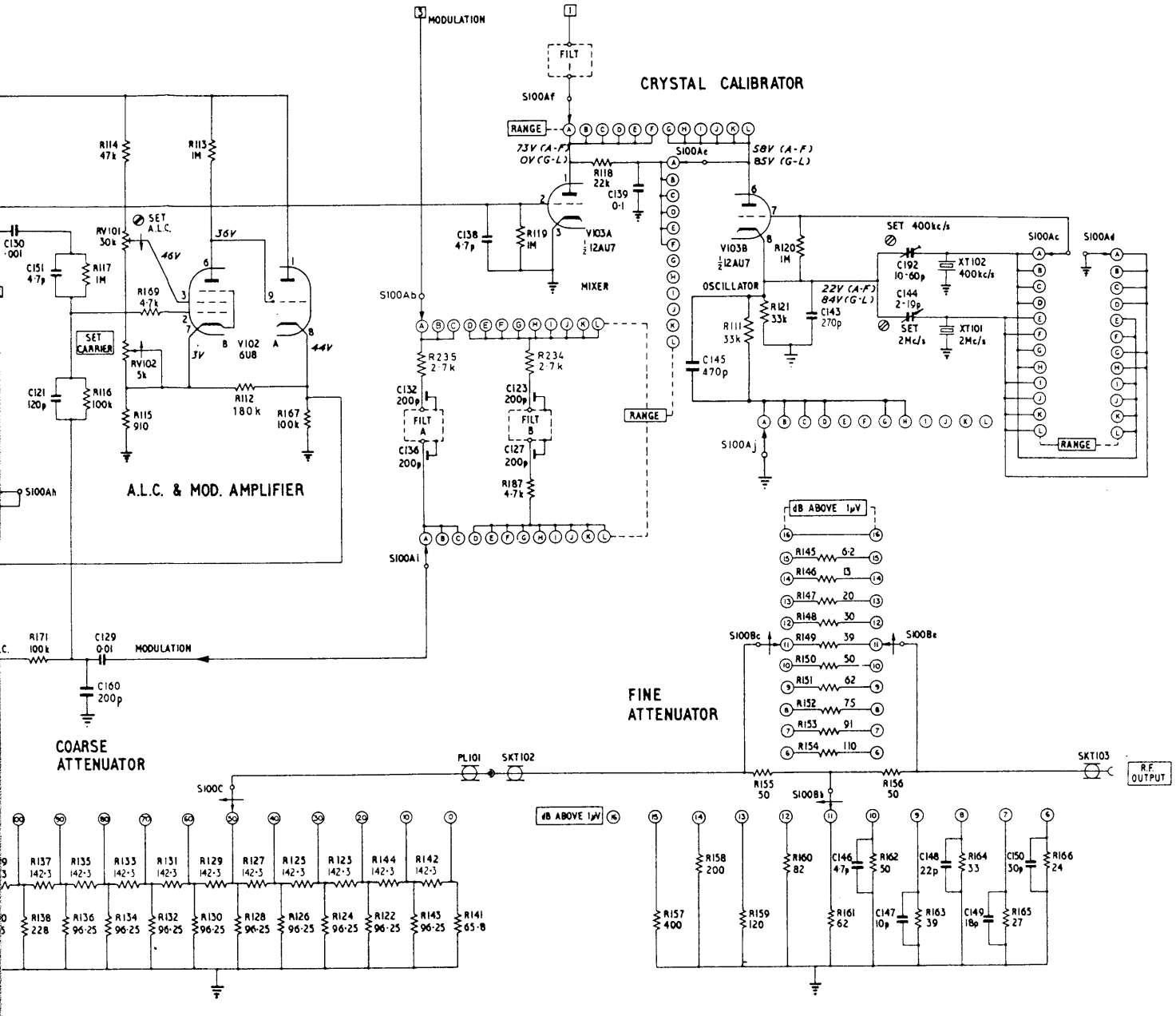

Fig. 4·11 R.F. BOX AND ATTENUATORS