THE FERRIS **M134** ALL TRANSISTOR

PORTABLE CAR RADIO

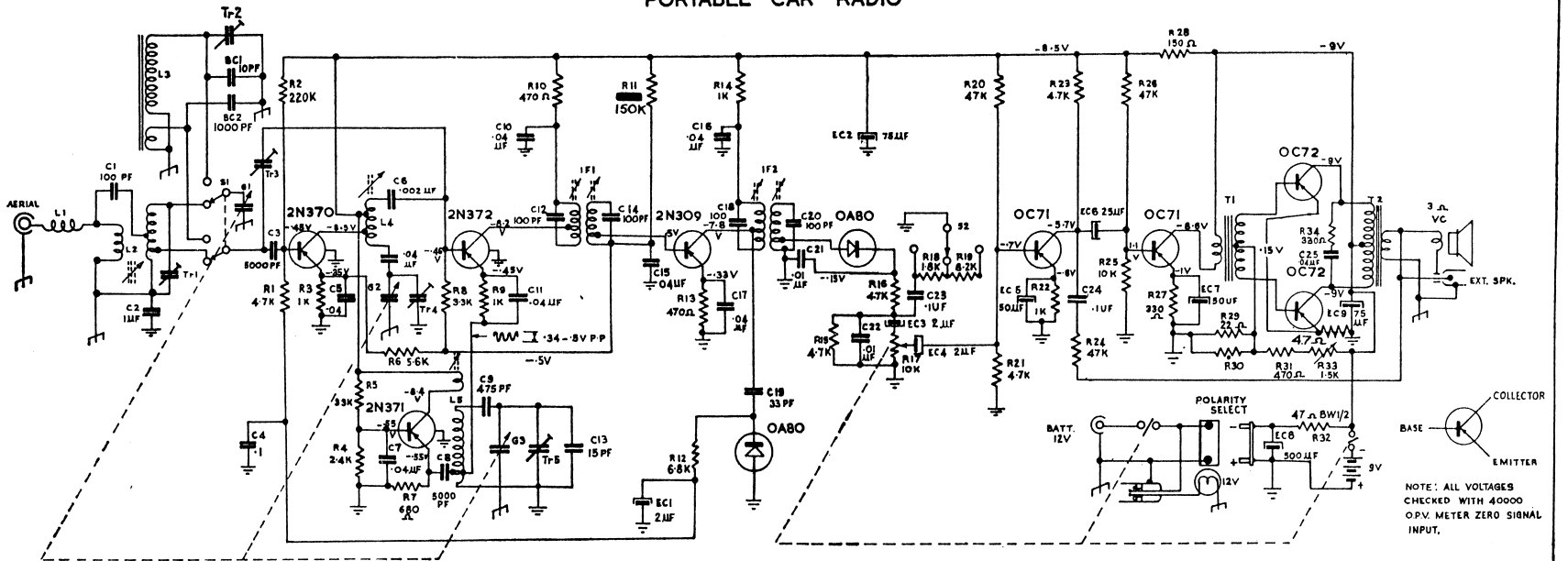

C1 – 100 PF 600V MOULDED CAPACITOR
C2 – 1µF 200V MOULDED CAPACITOR
C3 – 5000PF CERAMIC CAPACITOR
C4 – ·1 µF 100 V PAPER CAPACITOR
C5 – ·04 µF 200V MOULDED CAPACITOR
C6 – ·002 µF 200V MOULDED CAPACITOR
C7 – ·04 µF 200V MOULDED CAPACITOR
C8 – 5000PF 200V MOULDED CAPACITOR
C9 – 475PF 2% MICA CAPACITOR
C10 – ·04 µF 200V MOULDED CAPACITOR
C11 – ·04µF 200V MICA CAPACITOR
C12 – 100PF 5% MICA CAPACITOR

BAND COVERAGE 530 — 1620 KC/S
IF FREQUENCY 455 KC

C13 – 15 PF CERAMIC CAPACITOR
C14 – 100PF 5% MICA CAPACITOR
C15 – ·04µF 200V MOULDED CAPACITOR
C16 – ·04µF 200V MOULDED CAPACITOR
C17 – ·04 UF 200V MOULDED CAPACITOR
C18 – 100 PF 5% MICA CAPACITOR
C19 – 33 PF N.P.O. CERAMIC CAPACITOR
C20 – 100 PF 5% MICA CAPACITOR
C21 – ·01 µF 400V PAPER CAPACITOR
C22 – ·01µF 400V PAPER CAPACITOR
C23 ·1µF 100 V PAPER CAPACITOR
C24 ·1µF 100 V PAPER CAPACITOR
C25 ·04 µF 400V PAPER CAPACITOR

18 MA FOR ZERO SIGNAL INPUT
TOTAL BATTERY CURRENT

R1 – 4·7K 5% RESISTOR
R2 – 220K 5% RESISTOR
R3 – 1K 5% RESISTOR
R4 – 2·4K 5% RESISTOR
R5 – 33K 5% RESISTOR
R6 – 5·6K 5% RESISTOR
R7 – 680 Ω 5% RESISTOR
R8 – 3·3K 5% RESISTOR
R9 – 1K 5% RESISTOR
R10 – 470 Ω 5% RESISTOR
R11 – 150K 5% RESISTOR

*COLLECTOR CURRENT OF O/P STAGE 5MA ZERO SIGNAL (ADJUST R33)

R12 – 6·8K 5% RESISTOR
R13 – 470 Ω 5% RESISTOR
R14 – 1K 5% RESISTOR
R15 – 4·7K 10% RESISTOR
R16 – 4·7K 10% RESISTOR
R17 – 10K POTENTIOMETER D.P.S.T.S.
R18 – 1·8K 20% RESISTOR
R19 – 6·2K 20% RESISTOR
R20 – 47K 5% RESISTOR
R21 – 4·7K 5% RESISTOR
R22 – 1K 5% RESISTOR

R23 – 4·7 K 5% RESISTOR
R24 – 47K 5% RESISTOR
R25 – 10K 5% RESISTOR
R26 – 47K 5% RESISTOR
R27 – 330 Ω 5% RESISTOR
R28 – 150 Ω 10% RESISTOR
R29 – 22 Ω 10% RESISTOR
R30 – THERMISTER TYPE – No 68-320-01A/130E
R31 – 470 Ω 10% W/W RESISTOR
R32 – 47 Ω W/W RESISTOR
R33 – 1·5K VARIABLE RESISTOR
R34 – 330 Ω 10% RESISTOR

FRAME SHOWN THUS
FLOATING CHASSIS SHOWN THUS

EC1 – 2µF 12 V ELECTRO
EC2 – 75UF 12 V ELECTRO
EC3 – 2 µF 12 V ELECTRO
EC4 – 2 µF 12 V ELECTRO
EC5 – 50 µF 12 V ELECTRO
EC6 – 25 µF 12 V ELECTRO
EC7 – 50 µF 12 V ELECTRO
EC8 – 500 µF 15 V ELECTRO
EC9 – 75 µF 12 V ELECTRO
BC1 – 10 PF BUTTON CERAMIC
BC2 – 1000 PF BUTTON CERAMIC

Tr1 – CT3-55 SIMPLEX
Tr2 – CT3-55 SIMPLEX
Tr3 – 3-30 PF AIR TRIMMER

L1 – AERIAL CHOKE L210
L2 – AERIAL COIL 719
L3 – FERRITE ROD AERIAL 718
L4 – RF COIL 729
L5 – OSC COIL 739
IF1 – 460 KC TYPE 919
IF2 – 460 KC
T1 – DRIVER TRANS. 524
T2 – SPEAKER TRANS 38170
S1 – 2 POLE 2 POSITION SWITCH
S2 – 1 POLE 3 POSITION SWITCH

Tr4 CT3-55 SIMPLEX
Tr5 3-30 PF TRIMMER (AIR)
G1, G2, G3, TUNING CAPACITOR 10-415 PF

F1

STANDARD CRADLE — M.134. — 6 & 12 VOLT.

F1

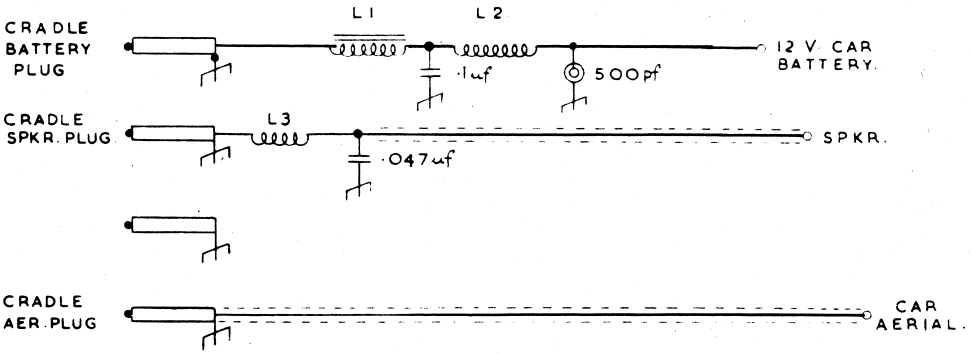

12 VOLT CRADLE FOR M.134. MK.I. 12 VOLT
M.134. MK II

L1 – L.T. FILTER CHOKE – TYPE 818

L2, L3 } R F CHOKE – TYPE 859.

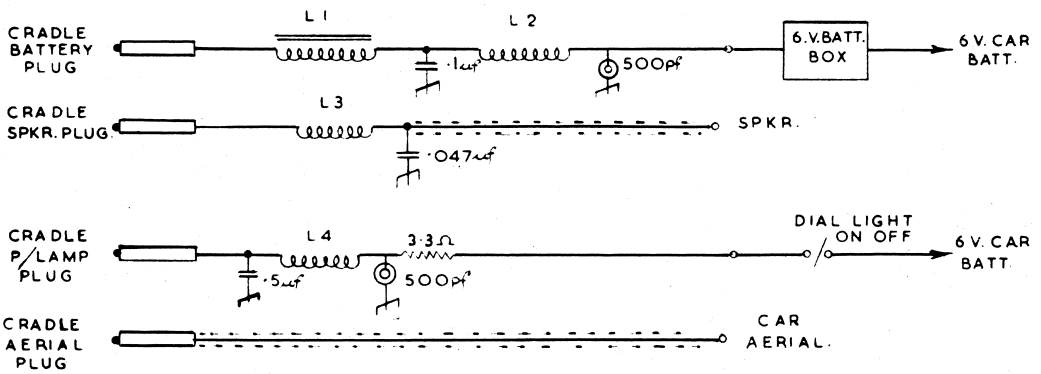

6 V CRADLE FOR M.134. MK.I. 6 VOLT.

L.1. – L.T FILTER CHOKE – TYPE 818.

L.2, L.3, L.4 } R.F. CHOKE TYPE 859

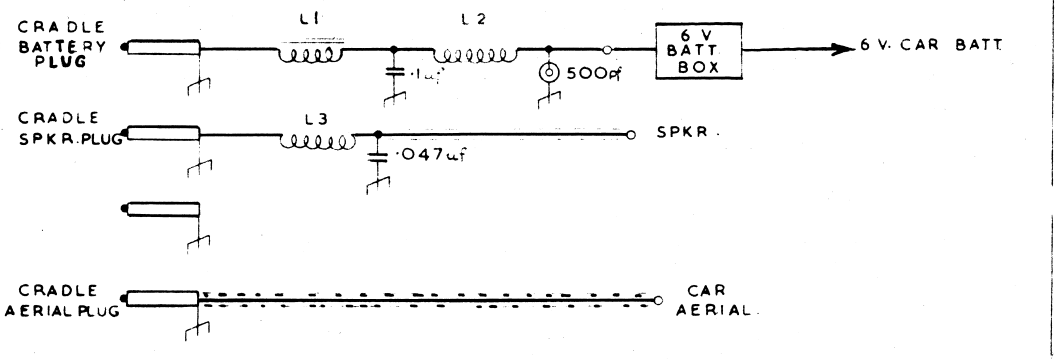

6 .V. CRADLE – M 134. M II

L1 – L.T. FILTER CHOKE – TYPE 818.

L2, L3 } R.F. CHOKE – TYPE 859.

R.A. 22.2.61

FERRIS MODEL 134 12 VOLT DE LUXE CRADLE
CIRCUIT DIAGRAM

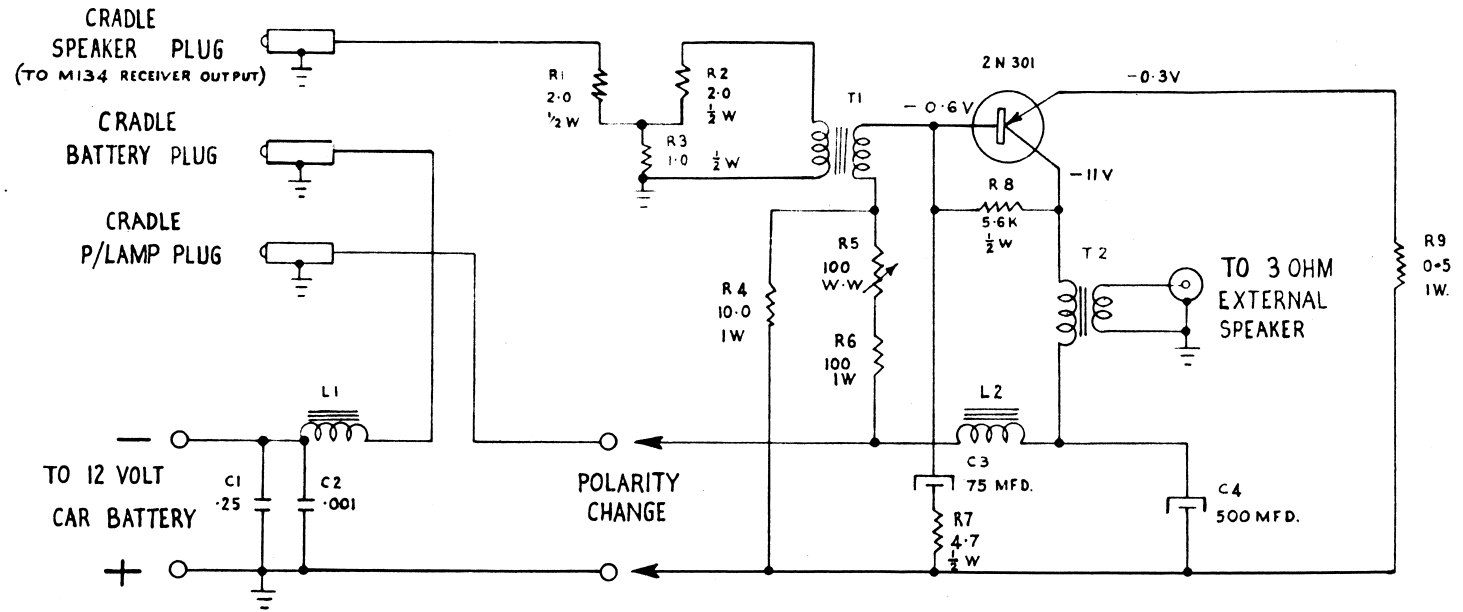

L1, L2 — L.T. FILTER CHOKES — PART Nº's 8101

T1 — DRIVER TRANSFORMER — PART Nº 527

T2 — SPEAKER TRANSFORMER — PART Nº R853

N.B. ADJUST R5 FOR 600 M.A. COLLECTOR CURRENT.

F1

SERVICE MODIFICATION TO FERRIS M134 PORTABLE CAR RADIO.

To prevent possible breakdown of the OC72 output transistors the modifications as shown on the attached sketch are recommended.

In service it has been found that on some OC72 transistors the junction temperature rises rapidly with current flow both from the 9 volt dry battery and also when the set is used on a car battery. In cold weather the thermistor cannot prevent this additional current flow because it only operates, i.e. drops in resistance and controls bias, with increase of ambient temperature. This it does very efficiently and thus permits the M134 to be used safely in very high temperatures such as occur in a closed car during the summer months.

To obtain greater "cold weather" stability the addition of a 4.7 ohm resistor in the emitter circuits of the OC72's gives automatic increase in bias which in turn limits the current flow through the transistors to a safe maximum. In addition lower resistance values in the existing bias divider network further assists in stabilising the OC72 transistors for satisfactory operation over a relatively wide temperature and voltage range.

Any existing M134 receivers in which the OC72 transistors may have failed or which cut out after a short period of operation and then recover, should be treated as follows. N.B. Transistors which have only failed temporarily need not be replaced. They will not again fail or cut out after the modification has been made.

See also attached sketch.

1. Shunt R29 (at present 1500 ohms) with an additional 560 ohm ½ watt carbon resistor.

2. Shunt R27 (at present 82 ohms) with an additional 33 ohm ½ watt carbon resistor.

3. Disconnect both OC72 emitter leads from chassis, link together and connect through one only 4.7 ohm BW½ resistor to chassis.

4. Reset R30 1500 ohm slide resistor to give OC72 collector current of 2 M.A. at zero signal input. Total battery current of set is 15 M.A. at zero signal input.

   N.B. For these settings battery must read 9 volts.

All factory production as and from Serial No. 134 - 2001 is modified as above.

MODIFICATION MODEL 134

VOLUME CONTROL CIRCUIT

Due to the unsatisfactory and noisy operation of the miniature volume control as used in the Model 134, it is advised that the modifications as shown in the attached schematic diagram will be incorporated in all production receivers as from this date.

It is also strongly recommended that this modification be included with any service replacement of the volume control unit necessitated by noisy operation.

The modification consists of a separate diode load resistor (4.7K± 10% ½W) and additional 2 MFD. electrolytic coupling condenser (Ducon type ES 1201), thus preventing the flow of diode current through the volume control element.

The 10K shunt resistor across the volume control (R13 in M134 circuit diagram) will be deleted in all receivers carrying this modification.

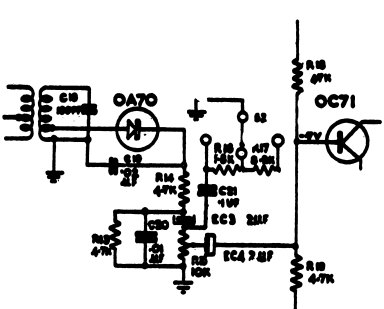

FERRIS BROS. PTY. LTD.

9-2-1960.

THE FERRIS **M134** ALL TRANSISTOR

PORTABLE CAR RADIO

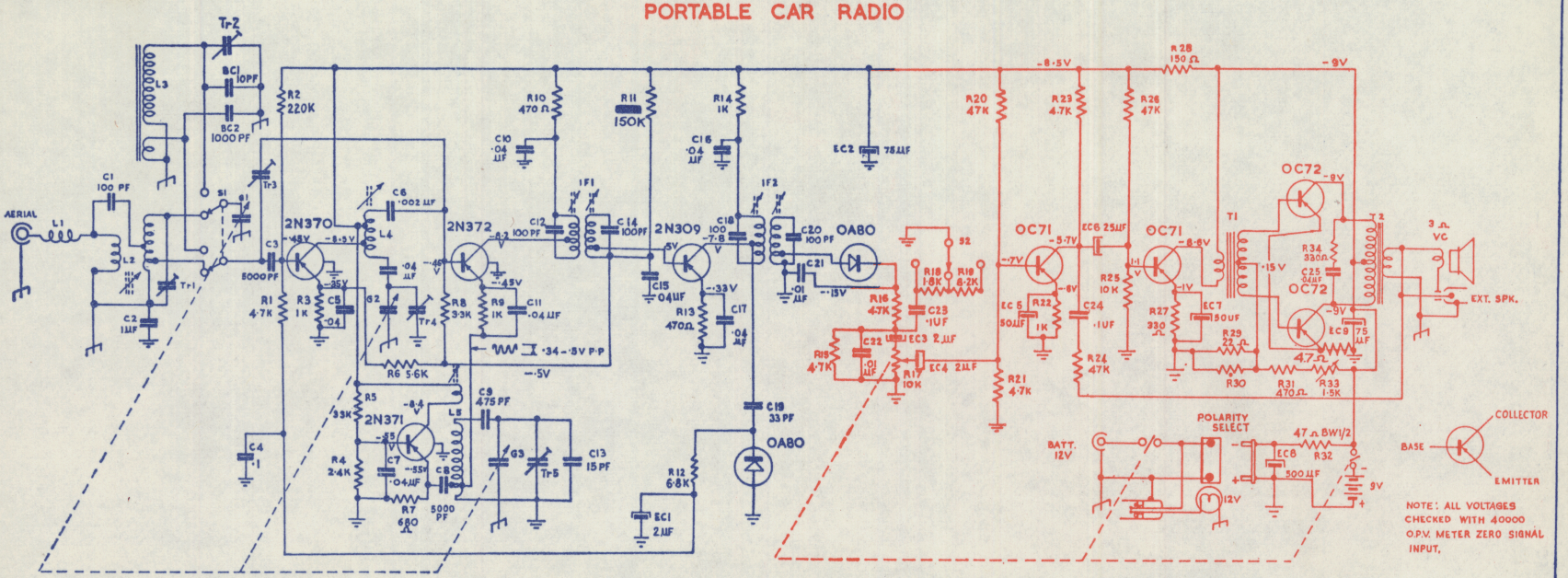

NOTE: ALL VOLTAGES CHECKED WITH 40000 O.P.V. METER ZERO SIGNAL INPUT.

C1 – 100 PF 600V MOULDED CAPACITOR
C2 – 1µF 200V MOULDED CAPACITOR
C3 – 5000PF CERAMIC CAPACITOR
C4 – ·1 µF 100 V PAPER CAPACITOR
C5 – ·04 µF 200V MOULDED CAPACITOR
C6 – ·002 µF 200V MOULDED CAPACITOR
C7 – ·04 µF 200V MOULDED CAPACITOR
C8 – ·5000PF 200V MOULDED CAPACITOR
C9 – 475PF 2% MICA CAPACITOR
C10 – ·04 µF 200V MOULDED CAPACITOR
C11 – ·04 µF 200V MICA CAPACITOR
C12 – 100 PF 5% MICA CAPACITOR

BAND COVERAGE 530 — 1620 KC/S
IF FREQUENCY 455 KC

C13 – 15 PF CERAMIC CAPACITOR
C14 – 100PF 5% MICA CAPACITOR
C15 – ·04µF 200V MOULDED CAPACITOR
C16 – ·04µF 200V MOULDED CAPACITOR
C17 – ·04 µF 200V MOULDED CAPACITOR
C18 – 100 PF 5% MICA CAPACITOR
C19 – 33PF N.P.O. CERAMIC CAPACITOR
C20 – 100PF 5% MICA CAPACITOR
C21 – ·01 µF 400V PAPER CAPACITOR
C22 – ·01µF 400V PAPER CAPACITOR
C23 – ·1µF 100 V PAPER CAPACITOR
C24 – ·1µF 100 V PAPER CAPACITOR
C25 – ·04 µF 400V PAPER CAPACITOR

18 MA FOR ZERO SIGNAL INPUT TOTAL BATTERY CURRENT

R1 – 4·7K 5% RESISTOR
R2 – 220K 5% RESISTOR
R3 – 1K 5% RESISTOR
R4 – 2·4K 5% RESISTOR
R5 – 33K 5% RESISTOR
R6 – 5·6K 5% RESISTOR
R7 – 680Ω 5% RESISTOR
R8 – 3·3K 5% RESISTOR
R9 – 1K 5% RESISTOR
R10 – 470Ω 5% RESISTOR
R11 – 150K 5% RESISTOR

R12 – 6·8K 5% RESISTOR
R13 – 470Ω 5% RESISTOR
R14 – 1K 5% RESISTOR
R15 – 4·7K 10% RESISTOR
R16 – 4·7K 10% RESISTOR
R17 – 10K POTENTIOMETER D.P.S.T.S.
R18 – 1·8K 20% RESISTOR
R19 – 8·2K 20% RESISTOR
R20 – 47K 5% RESISTOR
R21 – 4·7K 5% RESISTOR
R22 – 1K 5% RESISTOR

R23 – 4·7K 5% RESISTOR
R24 – 47K 5% RESISTOR
R25 – 10K 5% RESISTOR
R26 – 47K 5% RESISTOR
R27 – 330 Ω 5% RESISTOR
R28 – 150Ω 10% RESISTOR
R29 – 22Ω 10% RESISTOR
R30 – THERMISTER TYPE – Nº DB-320-01A/150E
R31 – 470Ω 10% W/W RESISTOR
R32 – 47Ω W/W RESISTOR
R33 – 1·5K VARIABLE RESISTOR
R34 – 330Ω 10% RESISTOR

FRAME SHOWN THUS
FLOATING CHASSIS SHOWN THUS

EC1 – 2µF 12 V ELECTRO
EC2 – 75uF 12 V ELECTRO
EC3 – 2 µF 12 V ELECTRO
EC4 – 2 µF 12 V ELECTRO
EC5 – 50 µF 12 V ELECTRO
EC6 – 25 µF 12 V ELECTRO
EC7 – 50 µF 12 V ELECTRO
EC8 – 500 µF 15 V ELECTRO
EC9 – 75 µF 12 V ELECTRO
BC1 – 10 PF BUTTON CERAMIC
BC2 – 1000 PF BUTTON CERAMIC

Tr1 – CT3-55 SIMPLEX
Tr2 – CT3-55 SIMPLEX
Tr3 – 3-30 PF AIR TRIMMER

L1 – AERIAL CHOKE L210
L2 – AERIAL COIL 719
L3 – FERRITE ROD AERIAL 718
L4 – RF COIL 729
L5 – OSC COIL 739
IF1 – 460 KC
IF2 – 460 KC
TYPE 919
T1 – DRIVER TRANS. 524
T2 – SPEAKER TRANS 38170
S1 – 2 POLE 2 POSITION SWITCH
S2 – 1 POLE 3 POSITION SWITCH

Tr4 CT3-55 SIMPLEX
Tr5 3-30 PF TRIMMER (AIR)
G1, G2, G3, TUNING CAPACITOR 10-415 PF

*COLLECTOR CURRENT OF O/P STAGE 3MA ZERO SIGNAL (ADJUST R33)

F1

FERRIS PORTABLE CAR RADIO

ALL TRANSISTOR MODEL M134 MKII

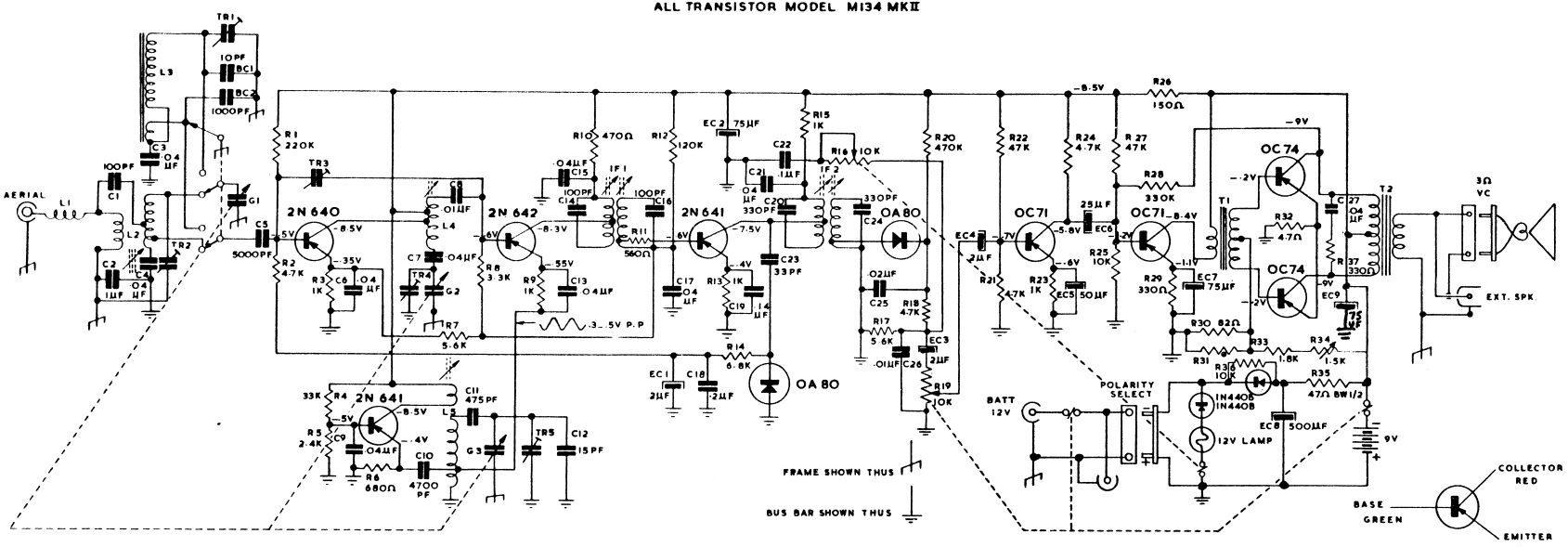

R1	220K	10%	RESISTOR	R20	470K	10%	RESISTOR	C1	100 PF	600V	MOULDED	CAPACITOR	C19	·14µF	200V	MOULDED	CAPACITOR
R2	4·7K	10%	RESISTOR	R21	4·7K	10%	RESISTOR	C2	1µF	200V	MOULDED	CAPACITOR	C20	330PF	5%	MICA	CAPACITOR
R3	1K	10%	RESISTOR	R22	47K	10%	RESISTOR	C3	·04µF	200V	MOULDED	CAPACITOR	C21	·04µF	200V	MOULDED	CAPACITOR
R4	33K	10%	RESISTOR	R23	1K	10%	RESISTOR	C4	·04µF	200V	MOULDED	CAPACITOR	C22	·1µF	200V	MOULDED	CAPACITOR
R5	2·4K	10%	RESISTOR	R24	4·7K	10%	RESISTOR	C5	5000PF		CERAMIC	CAPACITOR	C23	33PF	N.P.O.	CERAMIC	CAPACITOR
R6	680Ω	10%	RESISTOR	R25	10K	10%	RESISTOR	C6	·04µF	200V	MOULDED	CAPACITOR	C24	330PF	5%	MICA	CAPACITOR
R7	5·6K	10%	RESISTOR	R26	150Ω	10%	RESISTOR	C7	·04µF	200V	MOULDED	CAPACITOR	C25	·02µF	400V	MOULDED	CAPACITOR
R8	3·3K	10%	RESISTOR	R27	47K	10%	RESISTOR	C8	·01µF	200V	MOULDED	CAPACITOR	C26	·01µF	400V	MOULDED	CAPACITOR
R9	1K	10%	RESISTOR	R28	330K	10%	RESISTOR	C9	·04µF	200V	MOULDED	CAPACITOR	C27	·04µF	200V	MOULDED	CAPACITOR
R10	470Ω	10%	RESISTOR	R29	330Ω	10%	RESISTOR	C10	4700	PF	CERAMIC	CAPACITOR	EC1	2µF	12V	ELECTRO	
R11	560Ω	10%	RESISTOR	R30	82Ω	10%	RESISTOR	C11	475PF		MICA	CAPACITOR	EC2	75µF	12V	ELECTRO	
R12	120K	10%	RESISTOR	R31	THERMISTER OIA/130E			C12	15PF	N.P.O.	CERAMIC	CAPACITOR	EC3	2µF	12V	ELECTRO	
R13	1K	10%	RESISTOR	R32	4·7Ω	10%	RESISTOR	C13	·04µF	200V	MOULDED	CAPACITOR	EC4	2µF	12V	ELECTRO	
R14	6·8K	10%	RESISTOR	R33	1·8K	10%	RESISTOR	C14	100PF	5%	MICA	CAPACITOR	EC5	50µF	12V	ELECTRO	
R15	1K	10%	RESISTOR	R34	1·5K VARIABLE		RESISTOR	C15	·04µF	200V	MOULDED	CAPACITOR	EC6	25µF	12V	ELECTRO	
R16	10K	TONE CONTROL	5 P.S.T.	R35	47Ω	W/W	RESISTOR	C16	100PF	200V	MOULDED	CAPACITOR	EC7	75µF	12V	ELECTRO	
R17	5·6K	10%	RESISTOR	R36	10K	10%	RESISTOR	C17	·04µF	200V	MOULDED	CAPACITOR	EC8	500µF	15V	ELECTRO	
R18	4·7K	10%	RESISTOR	R37	330Ω	10%	RESISTOR	C18	·2µF	200V	MOULDED	CAPACITOR	EC9	75µF	12V	ELECTRO	
R19	10K	POTENTIOMETER	D.P.S.T.										DIAL	LAMP	12V	3W	

L1	AERIAL CHOKE L210
L2	AERIAL COIL 719
L3	FERRITE ROD AERIAL 718
L4	RF COIL 729
L5	OSC COIL 739
G1	3 GANG TUNNING CAPACITOR 10-450PF
G2	
G3	
BC1	10PF BUTTON CERAMIC
BC2	1000PF BUTTON CERAMIC
TR1	2 PLATE TRIMMER
TR2	2 PLATE TRIMMER
TR3	3-30PF AIR TRIMMER
TR4	2 PLATE TRIMMER
TR5	3-30 AIR TRIMMER
IF1	455KC TRANS. TYPE 919
IF2	455KC TRANS. TYPE 9181
T1	DRIVER TRANS. TYPE 524
T2	SPEAKER TRANS. 4301

BAND COVERAGE 530-1620 KC/S
IF FREQUENCY 455 KC

TOTAL BATTERY CURRENT 14M.A. ZERO SIGNAL.

COLLECTOR CURRENT OF O/P STAGE 4.5 M.A. FOR ZERO SIGNAL (ADJUST R33).

ALL RESISTORS 1/2 WATT RATING UNLESS OTHERWISE STATED

NOTE: ALL VOTAGES CHECKED WITH 40,000 OPV METER AT ZERO SIGNAL INPUT.

DO NOT OPERATE SET WITHOUT SPEAKER CONNECTED.

FERRIS PORTABLE CAR RADIO

ALL TRANSISTOR MODEL M134 MKII

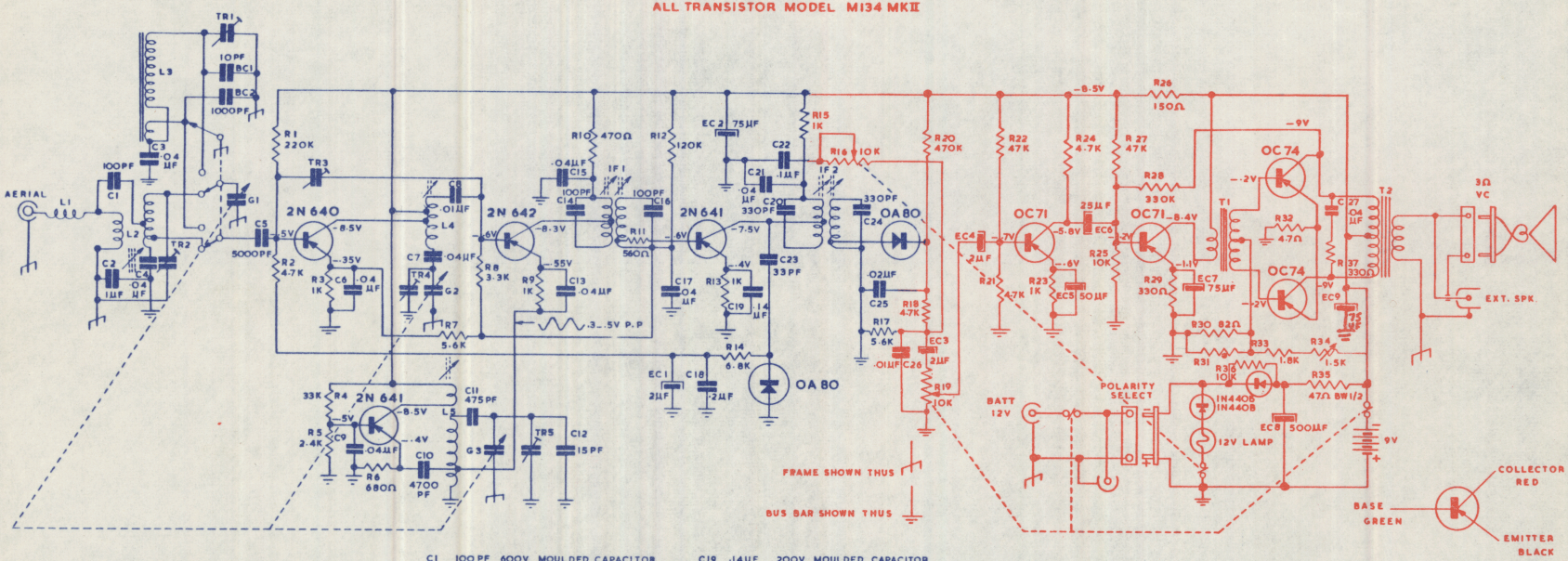

R1	220K	10%	RESISTOR	R20	470K	10%	RESISTOR
R2	4.7K	10%	RESISTOR	R21	4.7K	10%	RESISTOR
R3	1K	10%	RESISTOR	R22	47K	10%	RESISTOR
R4	33K	10%	RESISTOR	R23	1K	10%	RESISTOR
R5	2.4K	10%	RESISTOR	R24	4.7K	10%	RESISTOR
R6	680Ω	10%	RESISTOR	R25	10K	10%	RESISTOR
R7	5.6K	10%	RESISTOR	R26	150Ω	10%	RESISTOR
R8	3.3K	10%	RESISTOR	R27	47K	10%	RESISTOR
R9	1K	10%	RESISTOR	R28	330K	10%	RESISTOR
R10	470Ω	10%	RESISTOR	R29	330Ω	10%	RESISTOR
R11	560Ω	10%	RESISTOR	R30	82Ω	10%	RESISTOR
R12	120K	10%	RESISTOR	R31			THERMISTER 01A/130E
R13	1K	10%	RESISTOR	R32	4.7Ω	10%	RESISTOR
R14	6.8K	10%	RESISTOR	R33	1.8K	10%	RESISTOR
R15	1K	10%	RESISTOR	R34	1.5K		VARIABLE RESISTOR
R16	10K		TONE CONTPOL S.P.S.T.	R35	47Ω		W/W RESISTOR
R17	5.6K	10%	RESISTOR	R36	10K	10%	RESISTOR
R18	4.7K	10%	RESISTOR	R37	330Ω	10%	RESISTOR
R19	10K		POTENTIOMETER D.P.S.T.				

C1	100 PF	600V	MOULDED	CAPACITOR
C2	1μF	200V	MOULDED	CAPACITOR
C3	·04μF	200V	MOULDED	CAPACITOR
C4	·04μF	200V	MOULDED	CAPACITOR
C5	5000PF		CERAMIC	CAPACITOR
C6	·04μF	200V	MOULDED	CAPACITOR
C7	·04μF	200V	MOULDED	CAPACITOR
C8	·01μF	200V	MOULDED	CAPACITOR
C9	·04μF	200V	MOULDED	CAPACITOR
C10	4700	PF	CERAMIC	CAPACITOR
C11	475PF		MICA	CAPACITOR
C12	15PF	N.P.O.	CERAMIC	CAPACITOR
C13	·04μF	200V	MOULDED	CAPACITOR
C14	100PF	5%	MICA	CAPACITOR
C15	·04μF	200V	MOULDED	CAPACITOR
C16	100PF	200V	MOULDED	CAPACITOR
C17	·04μF	200V	MOULDED	CAPACITOR
C18	·2μF	200V	MOULDED	CAPACITOR

C19	·14μF	200V	MOULDED	CAPACITOR
C20	330PF	5%	MICA	CAPACITOR
C21	·04μF	200V	MOULDED	CAPACITOR
C22	·1μF	200V	MOULDED	CAPACITOR
C23	33PF	N.P.O.	CERAMIC	CAPACITOR
C24	330PF	5%	MICA	CAPACITOR
C25	·02μF	400V	MOULDED	CAPACITOR
C26	·01μF	400V	MOULDED	CAPACITOR
C27	·04μF	200V	MOULDED	CAPACITOR
EC1	2μF	12V	ELECTRO	
EC2	75μF	12V	ELECTRO	
EC3	2μF	12V	ELECTRO	
EC4	2μF	12V	ELECTRO	
EC5	50μF	12V	ELECTRO	
EC6	25μF	12V	ELECTRO	
EC7	75μF	12V	ELECTRO	
EC8	500μF	15V	ELECTRO	
EC9	75μF	12V	ELECTRO	
DIAL LAMP		12V	3W	

L1	AERIAL CHOKE L210
L2	AERIAL COIL 719
L3	FERRITE ROD AERIAL 718
L4	RF COIL 729
L5	OSC COIL 739
G1, G2, G3	3 GANG TUNNING CAPACITOR 10_450PF
BC1	10PF BUTTON CERAMIC
BC2	1000PF BUTTON CERAMIC
TR1	2PLATE TRIMMER
TR2	2PLATE TRIMMER
TR3	3_30PF AIR TRIMMER
TR4	2PLATE TRIMMER
TR5	3_30 AIR TRIMMER
IF1	455KC TRANS. TYPE 919
IF2	455KC TRANS. TYPE 9181
T1	DRIVER TRANS. TYPE 524
T2	SPEAKER TRANS. 4301

BAND COVERAGE 530_1620 KC/S
IF FREQUENCY 455 KC

TOTAL BATTERY CURRENT 14M.A. ZERO SIGNAL.

COLLECTOR CURRENT OF O/P STAGE 4.5 M.A. FOR ZERO SIGNAL (ADJUST R33).

ALL RESISTORS 1/2 WATT RATING UNLESS OTHERWISE STATED

NOTE: ALL VOTAGES CHECKED WITH 40,000 O.P.V. METER AT ZERO SIGNAL INPUT.

DO NOT OPERATE SET WITHOUT SPEAKER CONNECTED.

FERRIS ALL TRANSISTOR PORTABLE CAR RADIO. MODEL 134 MK. III

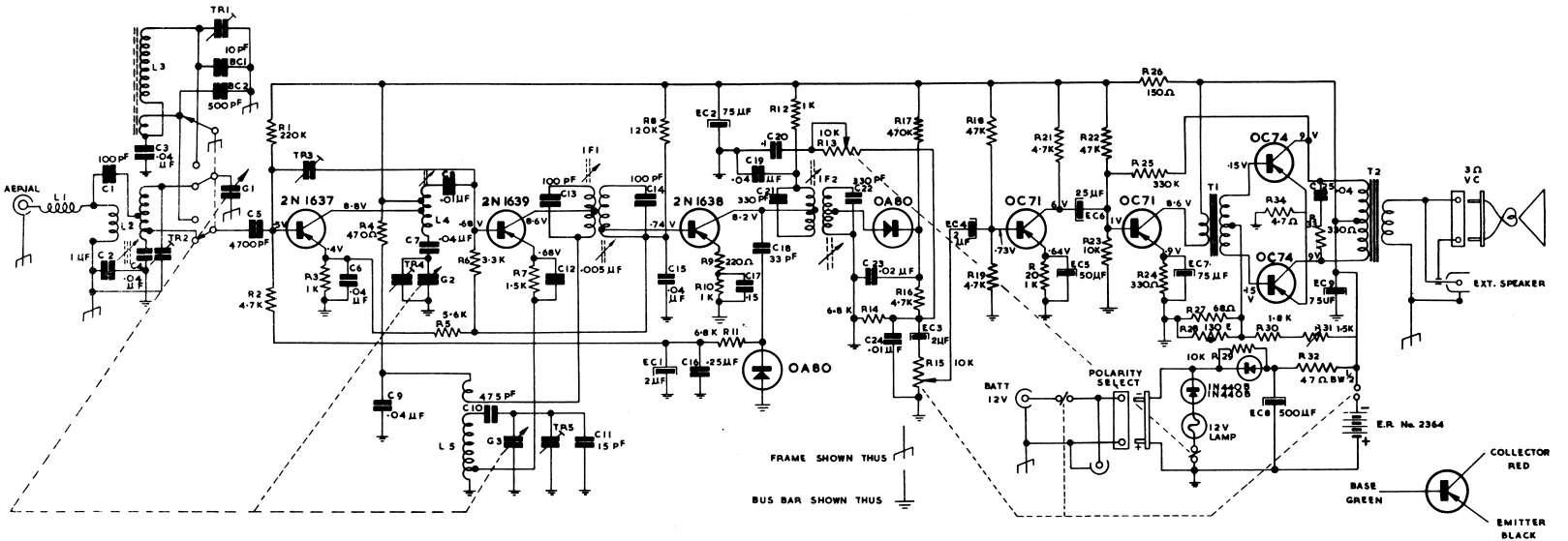

R1	220 K	10%	RESISTOR	R19	4·7 K	10%	RESISTOR	C1	100 PF	600 V	MOULDED	CAPACITOR	C20	·1 µF	200 V	MOULDED	CAPACITOR	L1	AERIAL CHOKE - L210				
R2	4·7 K	10%	RESISTOR	R20	1 K	10%	RESISTOR	C2	1 µF	200 V	MOULDED	CAPACITOR	C21	330 PF	5%	MICA	CAPACITOR	L2	AERIAL COIL - 719				
R3	1 K	10%	RESISTOR	R21	4·7 K	10%	RESISTOR	C3	·04 µF	200 V	MOULDED	CAPACITOR	C22	330 PF	5%	MICA	CAPACITOR	L3	FERRITE ROD AERIAL - 718				
R4	470 Ω	10%	RESISTOR	R22	47 K	10%	RESISTOR	C4	·04 µF	200 V	MOULDED	CAPACITOR	C23	·02 µF	200V	MOULDED	CAPACITOR	L4	R F COIL - 729				
R5	5·6 K	10%	RESISTOR	R23	10 K	10%	RESISTOR	C5	4700 PF		CERAMIC	CAPACITOR	C24	·01 µF	200V	MOULDED	CAPACITOR	L5	OSC COIL - 739				
R6	3·3 K	10%	RESISTOR	R24	330 Ω	10%	RESISTOR	C6	·04 µF	200V	MOULDED	CAPACITOR	C25	·04 µF	200V	MOULDED	CAPACITOR						
R7	1·5 K	10%	RESISTOR	R25	330 K	10%	RESISTOR	C7	·04 µF	200V	MOULDED	CAPACITOR						G1 G2 G3	3 GANG TUNING CAPACITOR 10 - 450 PF				
R8	120 K	10%	RESISTOR	R26	150 Ω	10%	RESISTOR	C8	·01 µF	200V	MOULDED	CAPACITOR	EC1	2 µF	12 V	ELECTRO							
R9	220 Ω	10%	RESISTOR	R27	68 Ω	10%	RESISTOR	C9	·04 µF	200V	MOULDED	CAPACITOR	EC2	75 µF	12 V	ELECTRO		BC1	10 PF BUTTON CERAMIC				
R10	1 K	10%	RESISTOR	R28	THERMISTOR		01A/130 E	C10	475 PF	± 2%	MICA	CAPACITOR	EC3	2 µF	12 V	ELECTRO		BC2	500 PF BUTTON CERAMIC				
R11	6·8 K	10%	RESISTOR	R29	10 K	10%	RESISTOR	C11	15 PF		N.P.O. CERAMIC	CAPACITOR	EC4	2 µF	12 V	ELECTRO							
R12	1 K	10%	RESISTOR	R30	1·8 K	10%	RESISTOR	C12	·005 µF	200V	MOULDED	CAPACITOR	EC5	50 µF	12 V	ELECTRO		TR1	2 PLATE TRIMMER				
R13	10 K	POTENTIOMETER	S.P.S.T.	R31	1·5 K	VARIABLE	RESISTOR	C13	100 PF	5%	MICA	CAPACITOR	EC6	25 µF	12 V	ELECTRO		TR2	2 PLATE TRIMMER				
R14	6·8 K	10%	RESISTOR	R32	47 Ω	10%	RESISTOR	C14	100 PF	5%	MICA	CAPACITOR	EC7	75 µF	12 V	ELECTRO		TR3	3-30 PF AIR TRIMMER				
R15	10 K	POTENTIOMETER	D.P.S.T.	R33	330 Ω	10%	RESISTOR	C15	·04 µF	200V	MOULDED	CAPACITOR	EC8	500 µF	15 V	ELECTRO		TR4	2 PLATE TRIMMER				
R16	4·7 K	10%	RESISTOR	R34	4·7 Ω	10%	RESISTOR	C16	·25 µF	200V	MOULDED	CAPACITOR	EC9	75 µF	12 V	ELECTRO		TR5	3-30 AIR TRIMMER				
R17	470 K	10%	RESISTOR					C17	·15 µF	200	MOULDED	CAPACITOR											
R18	47 K	10%	RESISTOR					C18	33 PF		CERAMIC	CAPACITOR	DIAL LAMP	12 V	3 W			IF1	455 KC TRANS TYPE - 919				
								C19	·04 µF	200V	MOULDED	CAPACITOR	T1	DRIVER TRANSFORMER TYPE 524				IF2	455 KC TRANS TYPE - 918				
													T2	SPEAKER TRANSFORMER " 4301									

BAND COVERAGE 530 - 1620 KC/S

IF FREQUENCY 455 K.C.

TOTAL BATTERY CURRENT 14 MA. ZERO SIGNAL.

COLLECTOR CURRENT OF O/P STAGE 4·5 MA. FOR ZERO SIGNAL (ADJUST R.31)

ALL RESISTORS 1/2 WATT RATING UNLESS OTHERWISE STATED.

NOTE:- ALL VOLTAGES CHECKED WITH 40,000 O.P.V. METER AT ZERO SIGNAL INPUT.

DO NOT OPERATE SET WITHOUT SPEAKER CONNECTED.