SANYO

'Sanyo Sounds Exciting!

Compact Cassette Recorder

MODEL M-88

SERVICE MANUAL

SANYO ELECTRIC CO., LTD.

INTERNATIONAL DIVISION : SANYO ELECTRIC TRADING CO., LTD.
OSAKA, JAPAN

SPECIFICATIONS

Transistors.....2SB303×1 2SB186×3
2SB22×2 2SC536×2
Diode .....1S188×1
Thermistors .....SDT09×2
Recording system.....Double track, AC bias (57K Hz)
200 to 400 μA
Erasing system..... AC erase (57K Hz)
Tape speed.....1⅞″(4.75cm)/sec.
Recording time .....30 minutes with single track (C-60)
60 minutes with double track (C-60)
Rewinding time .....less than 2 minutes
Fast forward time .....less than 2 minutes
Power output .....maximum power output
more than 1 W
at 10% distortion more than 700 mW

Speaker.....2¾″ (7 cm) impedance 8 ohm
Recording tape .....300 feet (90m).....length
Wow and flutter .....better than 0.5% RMS
Signal to Noise ratio .....better than -45 db
Frequency response ..... 90 Hz to 10,000Hz
Operating temperature.....0°C~40°C
Batteries .....UM-2×5 pcs. (C size cell×5)
Battery Life..... more than 12 hours
Dimensions ..... 9″(L)×5″(W)×2⅜″(H)
(227×123×60 mm)
Net weight ..... 2.8 lbs. (1.3 kg)

ADJUSTMENTS

(A) Adjusting Recording Bias

The following adjustments should be made after changing a recording/playback head, an erasing head a trap L-1 (Bias frequency) or the volume control variable resistor (VR-3).

1. Supply DC 7.5 V to the unit and set it for recording condition.
2. Connect both terminals of a vacuum tube volt meter (VTVM) with R4 (10 ohm) resistor in parallel as shown below. (See fig. 1)

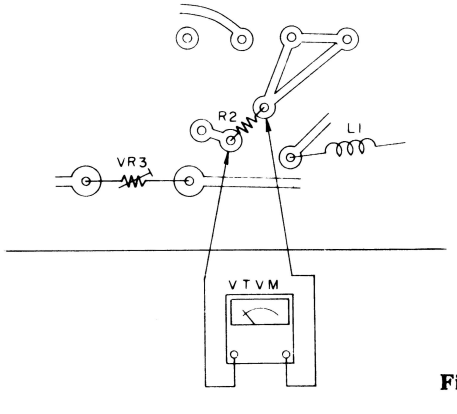

Fig. 1

3. Adjust L-1 so as to fix the trap L-1 maximum pointer deflection.
4. Then insert the cassette and set the volume knob to center.
5. Connect an audio generator to the microphone terminal and record two electric signals (1K Hz and 10 Hz) at -95 db input.
6. Connect an 8 ohm load resistor with the earphone terminal. Then play-back the signal recorded. Turn the volume knob VR (100K ohm) clockwise when the play-back signal of 10K Hz is stronger than that of 1K Hz. When the former signal output power is weaker than the latter, turn it counter-clockwise. Repeat above adjustment so that the signal output power at 1K Hz is lower than that at 10K Hz by 3 db.
7. Follow the steps from 1 to 6 when changing an erasing head, an RP head or a trap. When changing the VR, take the steps from 4 to 6.

(B) Adjusting the Meter

The following adjustment should be made after changing the meter or the volume control variable resistor (VR-2 B-100Kohm). Supply 5.5 V DC to the unit and set it for play-back condition. Adjust the VR-2 (B 100K ohm) so that the pointer deflects as far as the limit between the red and black zones.

CIRCUIT BOARD DIAGRAM

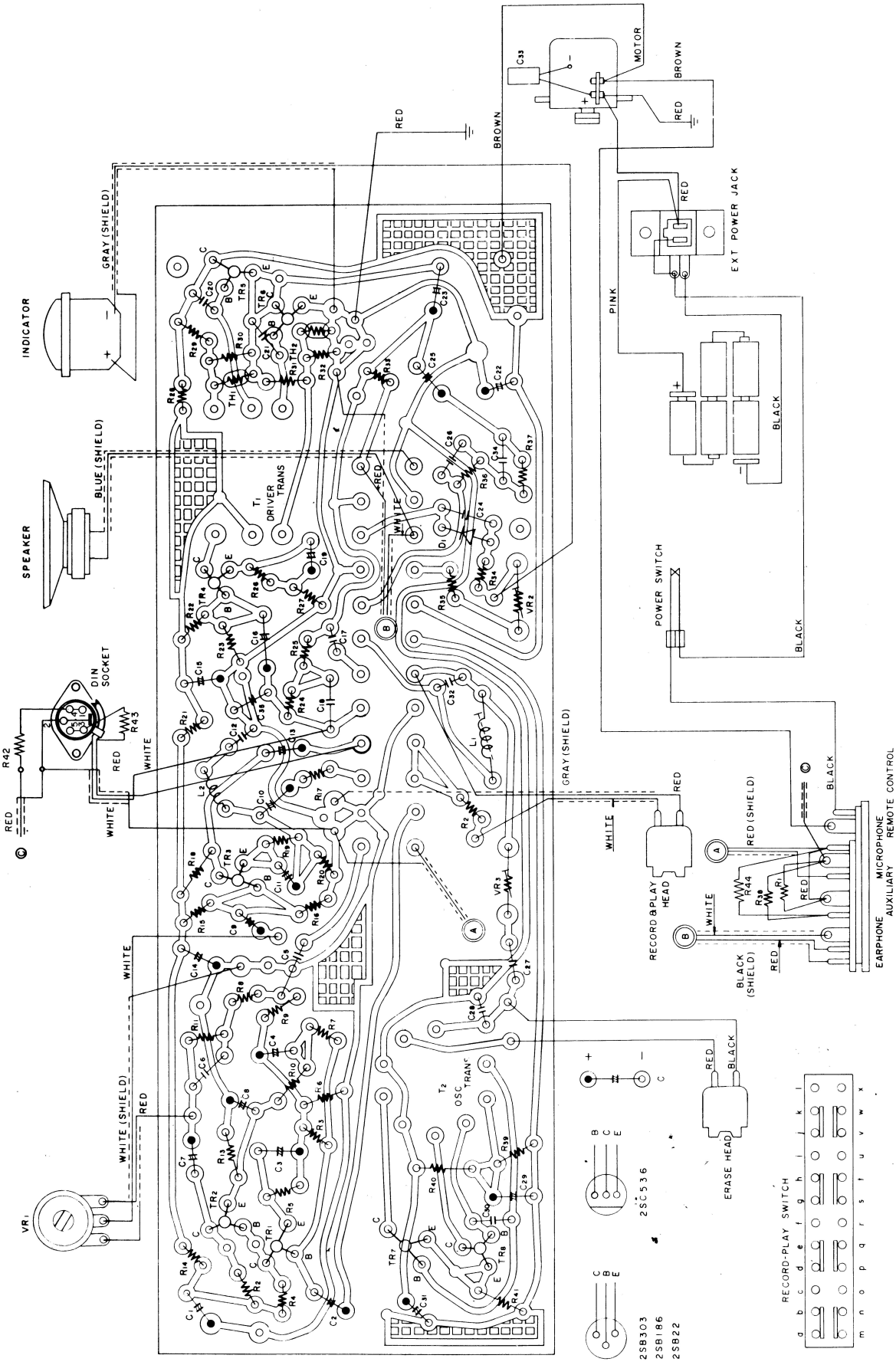

WM-4 December /68 3,000 **Printed in Japan**

(C) Adjusting the Mechanism

1. Position of Pinch Roller

The space between the pinch roller stopper and pinch roller arm must be 0.7-1.2mm when the PLAY button is pressed down. If not, adjust the angle of the pinch roller stopper by bending it. (See fig. 2)

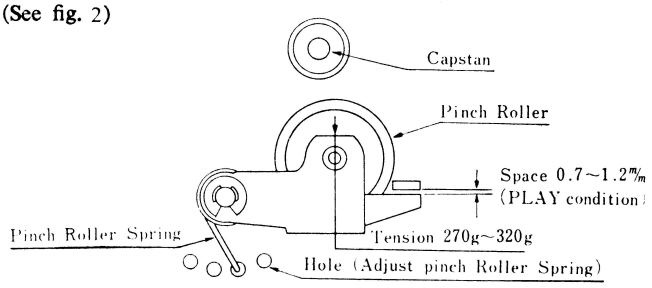

fig. 2

2. Pressing Force of Pinch Roller

When measuring the pressure of the pinch roller as shown in figure 2. the pressure of the pinch roller should be between 270 and 320 grams. If not, adjustment is possible by resetting the pinch roller spring into another hole.

3. Adjustment of the Flywheel Support Plate

When the space between the fiywheel hub and the receptacle on the support plate is either too narrow or too wide, adjust it to 0.15~0.4 mm by turning the screws on the side of the plate (See fig. 3)

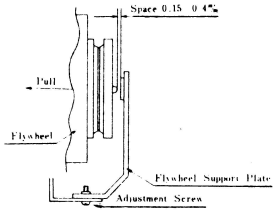

fig. 3

4. Adjustment of the drive roller

Appropriate pressure of the drive roller against the take-up reel should be 70-105 grams when the PLAY button is pressed. If not, adjustment is to be made by resetting the take-up pulley spring into another hole. (See fig. 4)

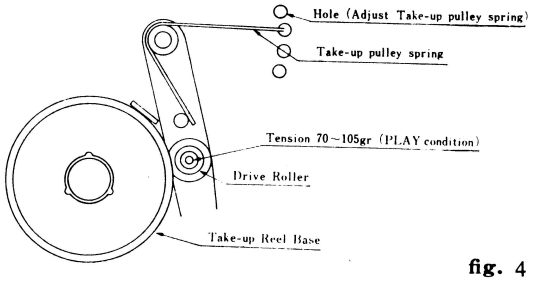

fig. 4

PARTS LIST

KEY NO.	PARTS NO.	DESCRIPTION	Q'ty
1	141 0 3119 002 00	CHASSIS ASSY	1
2	141 2 3169 002 00	BRACKET CHASSIS MOUNTING	1
3	4 2229 700 90	CONTROL VOL	1
4	141 2 3619 006 00	BRACKET VOL	1
5	141 2 8529 004 00	SPRING FIX CASSETTE	1
6	4 5119 700 21	INDICATOR	1
7	141 2 4459 004 00	CUSHION INDICATOR	2
8	141 2 4459 008 00	SHEET INDICATOR	1
9	141 2 4459 009 00	CUSHION SPEAKER	1
10	4 1519 700 10	SPEAKER	1
11	141 2 5649 002 01	SQUARE DRIVING BELT	1
12	141 0 7319 002 00	BASE SLIDE ASSY	1
13	141 0 5419 001 00	PINCH ROLLER ASSY	1
14	141 2 8519 015 00	SPRING PINCH ROLLER	1
15	4 2429 701 40	ERASE HEAD	1
16	4 2429 730 20	R/P HEAD ASSY	1
17	141 2 4729 001 00	LUG	1
18	141 2 8519 045 00	SPRING ADJUST HEAD	1
19			
20	141 2 8539 002 00	SPRING BALL	2
21	141 2 8259 001 00	BALL	6
22	141 0 7319 001 00	SLIDE BASE ASSY ARM	1
23	141 2 8519 009 00	SPG SLIDE BASE	1
24	141 2 5219 001 00	FLYWHEEL CAPSTAN	1
25	141 0 5719 001 00	BUSH ASSY CAPSTAN	1
26	141 0 3519 001 00	SUPPORT ASSY FLYWHEEL	1
27		WASHER NYLON FLYWHEEL	1
28		NUT HEX Flywheel Bearing 8mm	1
29		WASHER FLYWHEEL BEARING 8mm×14mm	1
30			
31			
32	141 0 3829 010 00	BATTERY HOLDER ASSY A	1
33	141 0 3519 002 00	COVER ASSY MOTOR PULLEY	1
34	141 0 5319 001 00	REEL PLATE ASSY	2

KEY NO.	PARTS NO.	DESCRIPTION	Q'ty
35	141 2 5369 004 00	CAP REEL PLATE	2
36	141 2 4539 002 00	WASHER SPINDLE	2
37	141 2 7139 002 00	PLATE BRAKE	1
38	141 2 8529 003 00	SPRING BRAKE	1
39	141 2 8259 003 00	SPACER BRAKE	1
40	141 2 7319 009 00	SLIDE ARM POWER SW	1
41	141 2 8519 012 00	SPRING SLIDE ARM POWER SW	
42	141 0 5519 001 00	TAKE UP PULLEY ASSY	
43	141 2 8519 013 00	SPRING TAKE UP PULLEY	1
44	141 0 1619 002 01	BUTTON ASSY SELECT	1
45	4 5279 730 10	MOTOR ASSY	1
46	141 2 4459 007 00	HOLDER RUBBER MOTOR	2
47	141 0 5559 002 00	IDLER ASSY	1
48	141 2 8519 017 00	SPRING IDLER	1
49	141 0 7319 003 00	BASE ASSY IDLER	1
50	141 2 8259 004 00	ROLLER IDLER BASE	2
51	141 0 7319 004 00	ARM ASSY REWIND ROLLER	1
52	141 0 5519 007 00	REWIND ROLLER ASSY	1
53	141 2 8519 018 00	SPRING REWIND ROLLER	1
54	141 2 4569 002 00	WASHER REWIND ROLLER	1
55	141 2 3529 003 00	SPACER REWIND ROLLER	1
56	141 2 1619 011 01	BUTTON RECORD	1
57	141 2 4619 002 00	TUBE TEFLON	1
58	141 2 8539 010 00	SPRING RECORD BUTTON	1
59	141 2 8429 001 00	INTERLOCK LEVER	1
60			
61			
62	4 2319 700 10	SWITCH POWER	1
63	141 2 4569 005 00	WASHER BATTERY HOLDER	2
64		SCREW 2.6mm×5mm Pan head	13
65		SCREW 2mm×12mm Flat head	1
66			
67		SCREW 2mm×4mm Flat head	10
68		SCREW 2.6mm×4mm Truss Phil.	1
69		SCREW 2.6mm×6mm Self tapping	11

MAIN PARTS LOCATION

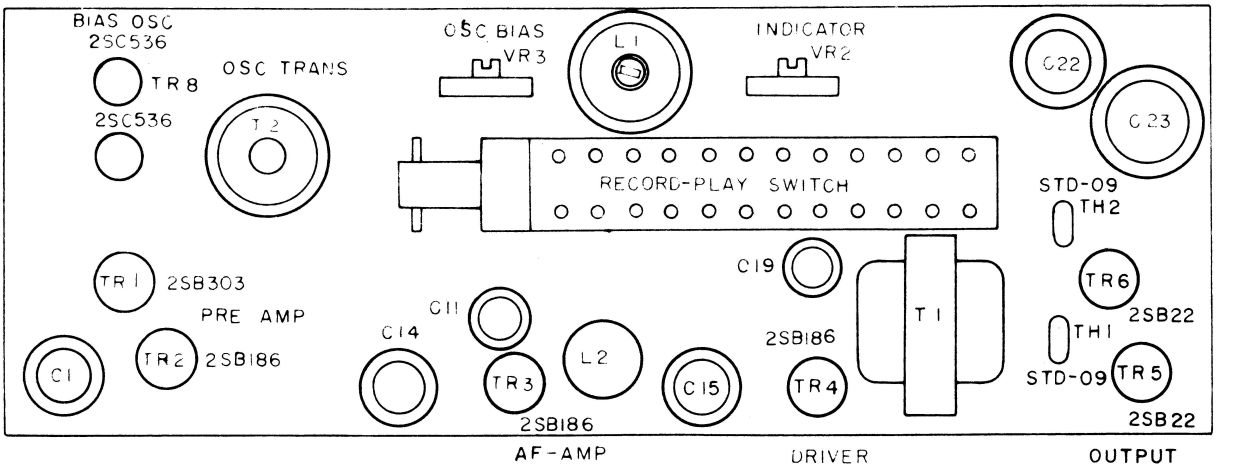

SCHEMATIC DIAGRAM

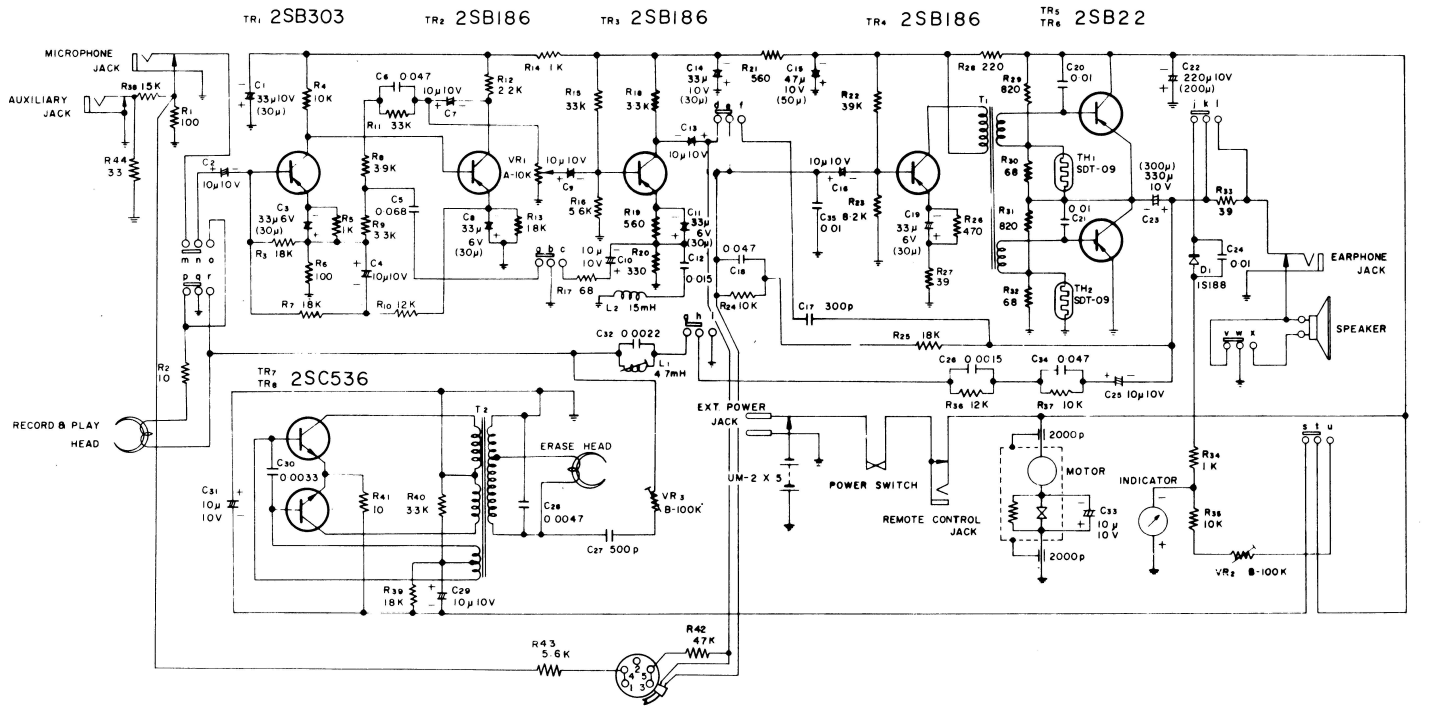

EXPLODED VIEW

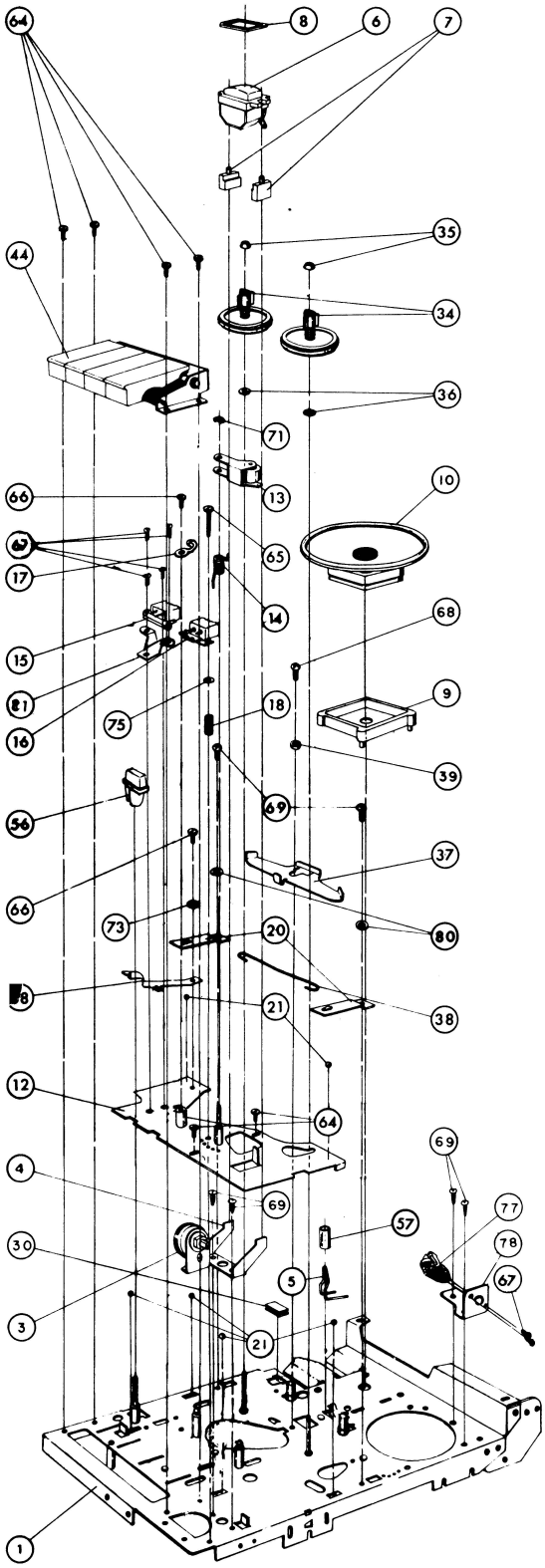

TOP VIEW

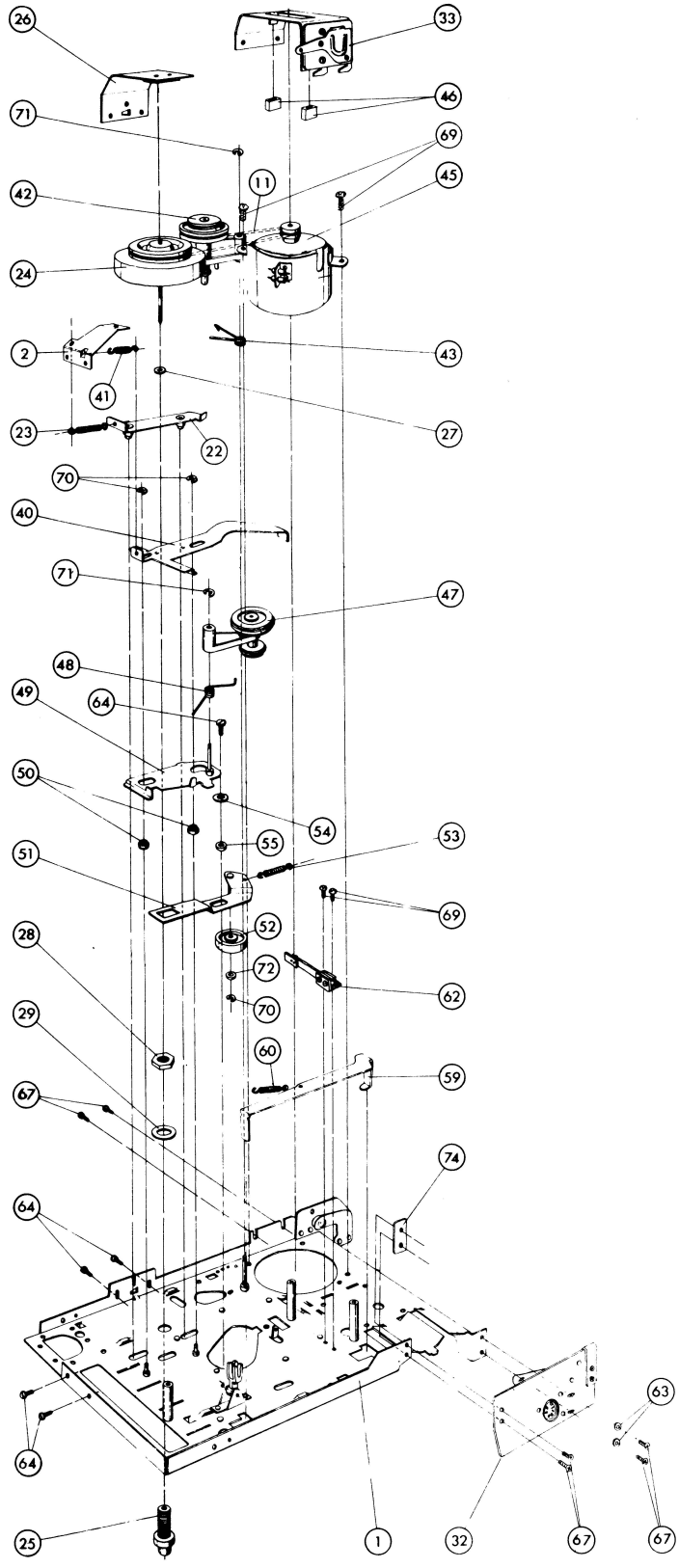

BOTTOM VIEW

PARTS LIST

KEY NO.	PARTS NO.	DESCRIPTION	Q'ty
70		C CLAMP 1.5mm	3
71		C CLAMP 2mm	3
72		WASHER MYLAR Rewind Roller 2mm×4mm	1
73		SPRING WASHER 2mm	1
74	141 2 4119 001 00	NUT BATTERY HOLDER	1
75		WASHER RECORD HEAD 2.3mm×4.3mm	1
76			
77			
78	141 2 3679 010 01	BRACKET POWER SOCKET	1
79			
80			
81	141 2 3769 007 00	SPACER HEAD	1

PARTS NO.	DESCRIPTION	Q'ty
Cabinet and Accesories		
141 0 1119 001 00	CABINET ASSY	1
141 0 1259 001 00	CABINET ASSY BOTTOM	1
141 0 1339 001 00	BATTERY COVER ASSY	1
141 0 1249 001 00	CASSETTE LID ASSY	1
141 0 1639 001 00	KNOB ASSY VOL	1
141 2 4219 006 00	SCREW CABI FIX	2
141 2 3229 002 00	SHIELD LEAF	1
141 2 1919 006 00	STAND MICROPHONE	1
141 2 1819 010 00	CASE	1
141 2 1769 008 00	SHOULDER STRAP	1
4 1539 700 70	MICROPHONE	1
4 1529 700 11	EARPHONE	1
4 2369 701 00	RECORD CORD	1
Electrical Parts		
4 2549 700 10	DRIVER TRANS	1
4 2589 700 20	OSC COIL	1
4 2729 700 10	PEAKING COIL	1
4 2599 700 20	BIAS TRAP	1
4 2319 700 20	SWITCH SLIDE	1
4 2359 700 50	JACK 4P	1
4 2229 729 20	POTENTIOMETER B-100K	2
4 2269 730 40	PRINTED CIRCUIT BOARD ASSY	1
Packing		
141 6 1416 006 00	INDIVIDUAL CARTON	1
141 6 2519 002 00	POLY COVER CABI	1
141 6 1449 001 00	CASE STYROFOAM TOP	1
141 6 1449 002 00	CASE STYROFOAM BOTTOM	1
Semiconductors		
TR-1	2SB303	1
TR-2, 3, 4	2SB186	3
TR-5, 6,	2SB22	2
TR-7, 8	2SC536	2
D-1	1S188	1
TH-1, 2	SDT-09	2

SYMBOL NO.	DESCRIPTION		Q'ty
Capacitors			
C17	Mylar 330 PF	50V	1
C27	Mylar 470 PF	50V	1
C34	Mylar 100 PF	50V	1
C26	Mylar 0.0015 μF	50V	1
C32	Mylar 0.0022 μF	50V	1
C30	Mylar 0.0033 μF	50V	1
C28	Mylar 0.0047 μF	50V	1
C20, C21, C24	Mylar 0.01 μF	50V	3
C12	Mylar 0.013 μF	50V	1
C6, C18, C36	Mylar 0.047 μF	50V	3
C5	Mylar 0.027 μF	50V	1
C2, 4, 7, 9, 10, 13, 16, 25, 29, 31	Electrolytic 10 μF	10WV	10
C3, 8, 11, 19	Electrolytic 33 μF	6WV	4
C14, 15	Electrolytic 47 μF	10WV	2
C1	Electrolytic 100 μF	6WV	1
C22	Electrolytic 220 μF	10WV	1
C23	Electrolytic 330 μF	10WV	1
Resistors			
R2, 41	10 ohm	¼	2
R27, 33	39 ohm	¼	2
R17, 30, 32	68 ohm	¼	3
R1, 6	100 ohm	¼	2
R28	220 ohm	¼	1
R30	330 ohm	¼	1
R26	470 ohm	¼	1
R19, 21	560 ohm	¼	2
R29, 31	820 ohm	¼	2
R5, 14, 34	1K ohm	¼	3
R13	1.8K ohm	¼	1
R12	2.2K ohm	¼	1
R9, 18, 40	3.3K ohm	¼	3
R8	3.9K ohm	¼	1
R16, 38	5.6K ohm	¼	2
R23	8.2K ohm	¼	1
R4, 24, 35, 42	10K ohm	¼	4
R10, 36	12K ohm	¼	2
R3, 7, 25, 39	18K ohm	¼	4
R11, 15	33K ohm	¼	2
R22	39K ohm	¼	1
R37	47K ohm	¼	
R43	39K ohm	¼	
R44	33 ohm	¼	1