SANYO

Compact Cassette Corder

MODEL M-48

SERVICE MANUAL

SANYO ELECTRIC CO., LTD.

INTERNATIONAL DIVISION : SANYO ELECTRIC TRADING CO., LTD.
OSAKA, JAPAN

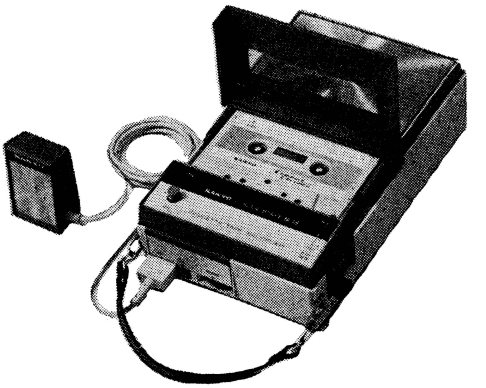

SPECIFICATIONS

Transistors ····· 2SB303×1 2SB186×2
2SB22×3
Thermistors ····· SDT09×1
Recording system ····· Double track, AC bias (37 KHz)
200 to 400 μA
Erasing system ····· DC erase
Tape speed ····· $1\frac{7}{8}''$ (4.75cm)/sec.
Recording time ····· 30 minutes with single track
60 minutes with double track
Rewinding time ····· less than 2 minutes
Power output ····· maximum power output
more than 300 mW
at 10% distortion more than 200 mW

Speaker ····· $2\frac{3}{4}''$(7 cm) impedance 8 ohm
Recording tape ····· 300 feet (90m)·····length
Wow and flutter ····· better than 0.6% RMS
Signal to Noise ratio ····· better than -35 db
Frequency response ····· 150 Hz to 5,000 Hz within 6 db band
Operating temperature ····· 0°C~40°C
Batteries ····· UM-2×4 pcs. (C size cell×4)
Terminals ····· Microphone···impedance 1.2K ohm
sensitivity -79 db
Earphone·····impedance 8 ohm
Dimensions ····· $8''$(L)×$4\frac{13}{16}''$(W)×$2\frac{3}{8}$(H)
201(L)×123(W)×61(H) mm
Net weight ····· 2.9 lbs. (1.3 Kg)

ADJUSTMENTS

(A) Adjusting Recording Bias

The following adjustments should be made after changing a recording/playback head, an erasing head or the volume control variable resistor (VR-2).

1. Supply DC 6V to the unit and set it for recording condition.
2. Connect both terminals of a vacuum tube volt meter (VTVM) with R2 (10 ohm) resistor in parallel as shown below. (See fig. 1, 2)

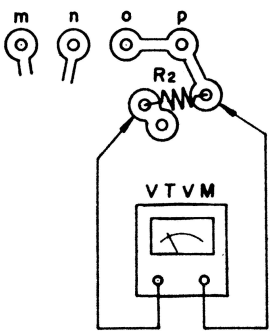

Fig. 1

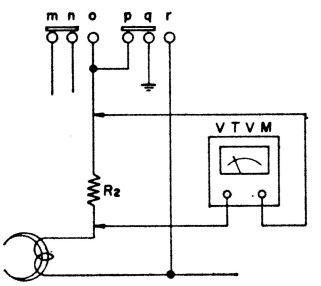

Fig. 2

3. Then insert the cassette and set the volume knob to center (II mark).
4. Connect an audio generator to the microphone terminal and record two electric signals (150 Hz and 5,000 Hz) at 75 db input.
5. Connect an 8 ohm load resistor with the earphone terminal. Then play-back the signal recorded. Turn the volume knob VR 2 (B-100 kohm) clockwise when the play-back signal of 150 Hz is stronger than that of 5,000 Hz. When the former signal output power is weaker than the latter, turn it counter-clockwise. Repeat above adjustment so that the signal out-put power at 5,000 Hz is same to at 150 Hz.
6. Follow the steps from 1 to 5 when changing an erasing head or an RP head. When changing the VR-2, take the steps from 3 to 5.

(B) Recording Level Indicator

Turn the variable resistor VR3 (B-200Ω) and fix it at the place where the recording level indicator lights up.

CIRCUIT BORD DIAGRAM

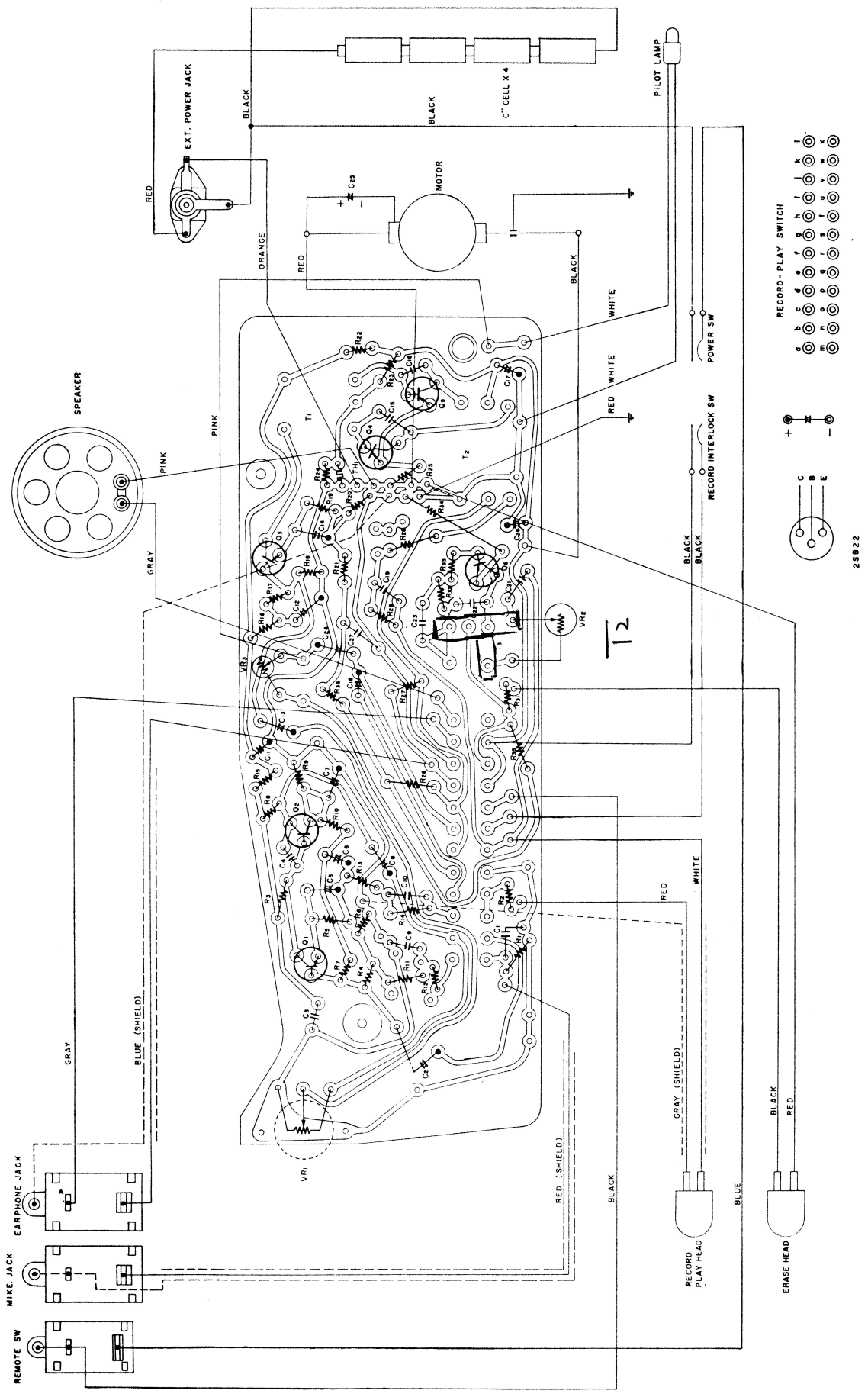

Printed in Japan

(C) Adjusting the Mechanism

1. Position of Pinch Roller

The space between the pinch roller stopper and pinch roller arm must be 0.7–1.2mm when the PLAY button is pressed down. If not, adjust the angle of the pinch roller stopper by bending it. (See fig. 3)

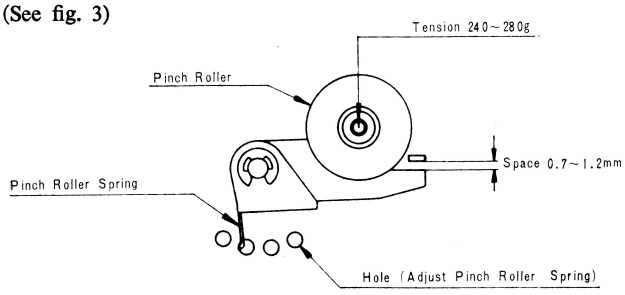

Fig. 3

2. Pressing Force of Pinch Roller

When measuring the pressure of the pinch roller as shown in figure 3. the pressure of the pinch roller should be between 240 and 280 grams. If not, adjustment is possible by resetting the pinch roller spring into another hole.

3. Adjustment of the Flywheel Support Plate

When the space between the flywheel hub and the receptacle on the support plate is either too narrow or too wide, adjust it to 0.15~0.3 mm by turning the screws on the side of the plate (See fig. 4)

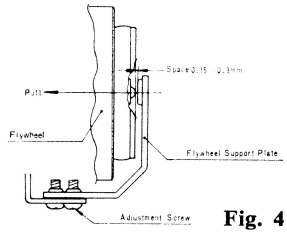

Fig. 4

4. Adjustment of the Take-up Torque

This adjustment should be done only after edging for at least 30 minutes. Before adjusting, insert a Cassette and press the PLAY button. When the adjustment is completed, the take-up torque should be 30–55 gr. and the space between the nylon washer (36) and the upper part of the reel plate (31) should be 0.2–0.4 mm. Since these two measurements are governed by the same spring, they must be done simultaneously.

First adjust the take-up torque adjustment screw, which pushes up the spring under the reel plate, for the proper torque. Then adjust the take-up torque off screw, which depresses the other end of the spring, until the proper washer-reel plete spacing is achieved. Then adjust once again for torque, and so forth. This adjustment will usually have to be ropeated several times for the proper balance. When the adjustments are completed, secure the nuts with glue.

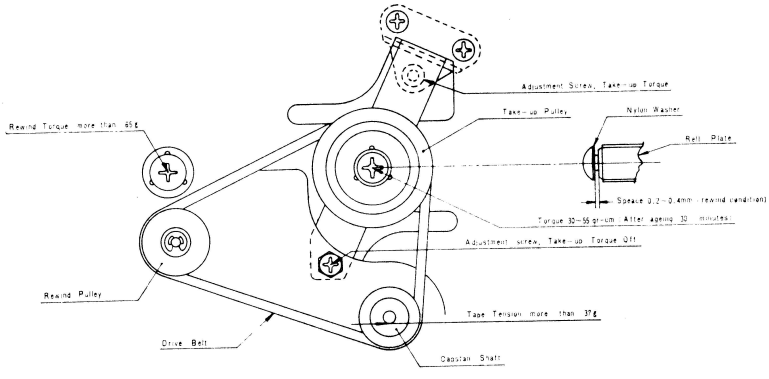

Fig. 5

PARTS LIST

KEY No.	PARTS NO.	DESCRIPTION	Q'ty
1	KR3-AS228	Assembly, Chassis	1
2	KR4-11284	Bracket, level indicator lamp	1
3	KR4-11285	Bracket, mountin back cover	1
4	KR4-11288	Bracket, cassette holding	1
5	KR4-16076	Spring, cassette holding	1
6	KR-E3031-2	Assembly,external power jack and bracket	1
7	KR4-26154	Cover, function selector	1
8	KR4-36089	Cushion, speaker	1
9	KR4-36088	Cushion, level indicator lamp	1
10	KR4-36090	Drive belt, motor	1
11	KR4-36091	Drive belt, reel	1
12	KR-E4009	Lamp, level indicator	1
13	KR3-AS230	Assembly, slide base	1
14	KR4-AS233	Assembly, pinch roller and arm	1
15	KR-11168	C clamp, 2ϕ pinch roller arm	1
16	KR4-16079	Spring, pinch roller and arm	1
17	KR4-16081	Spring, slide base link	1
18	KR-H1017	Assembly, rec/play head with holder	1
19	KR-H2008	Assembly, erase head with holder	1
20	KR4-16075	Spring, record/play head	1
21	KR4-AS238	Assembly, capstan shaft	1
22	KR3-28074	Flywheel	1
23	KR3-11278-2	Assembly, flywheel supporter	1
24	KR4-AS232	Assembly, rewind pulley and arm	1
25	KR-15100	Screw, 2.6 mm×6 mm self tapping	11
26	KR4-11186	Washer, rewind pulley	1
27	KR4-16078	Spring, rewind pulley	1

KEY NO.	PARTS NO.	DESCRIPTION	Q'ty
28	KR4-25131	Spacer, rewind pulley arm	1
29	KR4-23040	Leaf spring, take-up reel	1
30	KR4-11290	Bracket, leaf spring mounting	1
31	KR4-AS258	Assembly, reel plate	1
32	KR4-AS259	Assembly, take up pulley	1
33	KR4-14048	Spindle, take-up reel plate	1
34	KR4-25130	Bushing, take-up spindle	1
35	KR4-24053	Washer, 3.6ϕ×8ϕ; reel spindle	2
36	KR4-31327	Nylon washer, 3.6ϕ×6.3ϕ; reel spindle	2
37	KR4-31325	Reel plate, supply	1
38	KR4-16077	Spring, supply reel	1
39	KR4-14049	Spindle, supply reel	1
40	KR3-AS235	Assembly, function selector	1
41	KR4-AS236	Assembly, function latch plate	1
42	KR4-16080	Spring, latch plate	1
43	KR4-31434	Knob, function selector	1
44	KR4-31321	Lever, Rec/Play switch	1
45	KR4-23039	Leaf spring, Rec/Play switch	1
46	KR4-11291	Washer, Rec/Play leaf spring	1
47	KR4-11282	Lever, record interlock	1
48	KR4-31312	Button, record	1
49	KR-E1034	Switch, record interlock	1
50	KR4-33034	Phenolic washer, linen base, Batt. terminal	3
51	KR4-23043	Terminal, battery	2
52	KR4-31323	Polycarbonate spacer, Batt. terminal	1
53	KR4-11283	Steel washer, battery terminal	2

MAIN PARTS LOCATION

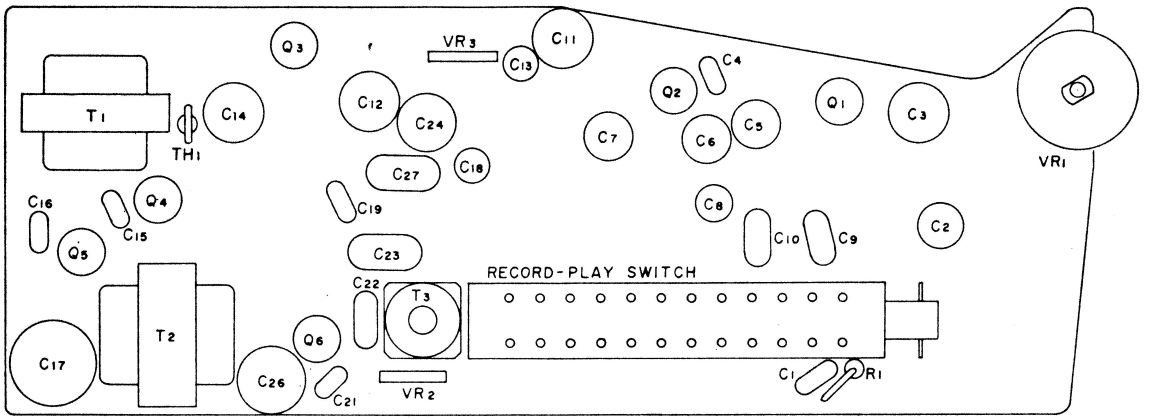

T1 KR-N1015	INPUT TRANSFOMER	Q1 2SB303	AUDIO AMP	VR1 A-10 ohm	VOLUME CONTROL
T2 KR-N1016	OUTPUT TRANSFOMER	Q2 2SB186	AUDIO AMP	VR2 B-100K ohm	RECORDING BIAS OSCILLATOR
T3 KR-N1017	OSCILLATOR COIL	Q3 2SB186	AUDIO AMP	VR3 B-200 ohm	RECORDING LEVEL INDICATOR
		Q4 2SB22	POWER AMP		
		Q5 2SB22	POWER AMP		
		Q6 2SB22	OSCILLATOR		

SCHEMATIC DIAGRAM

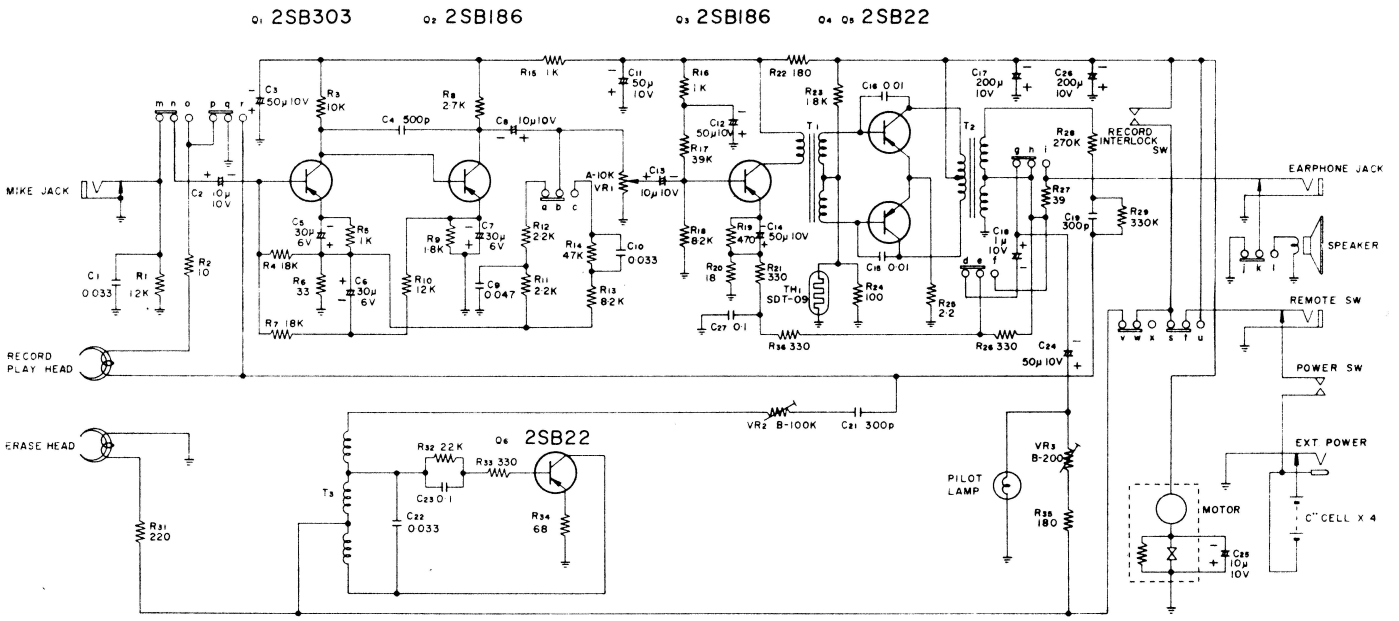

EXPLODED VIEW

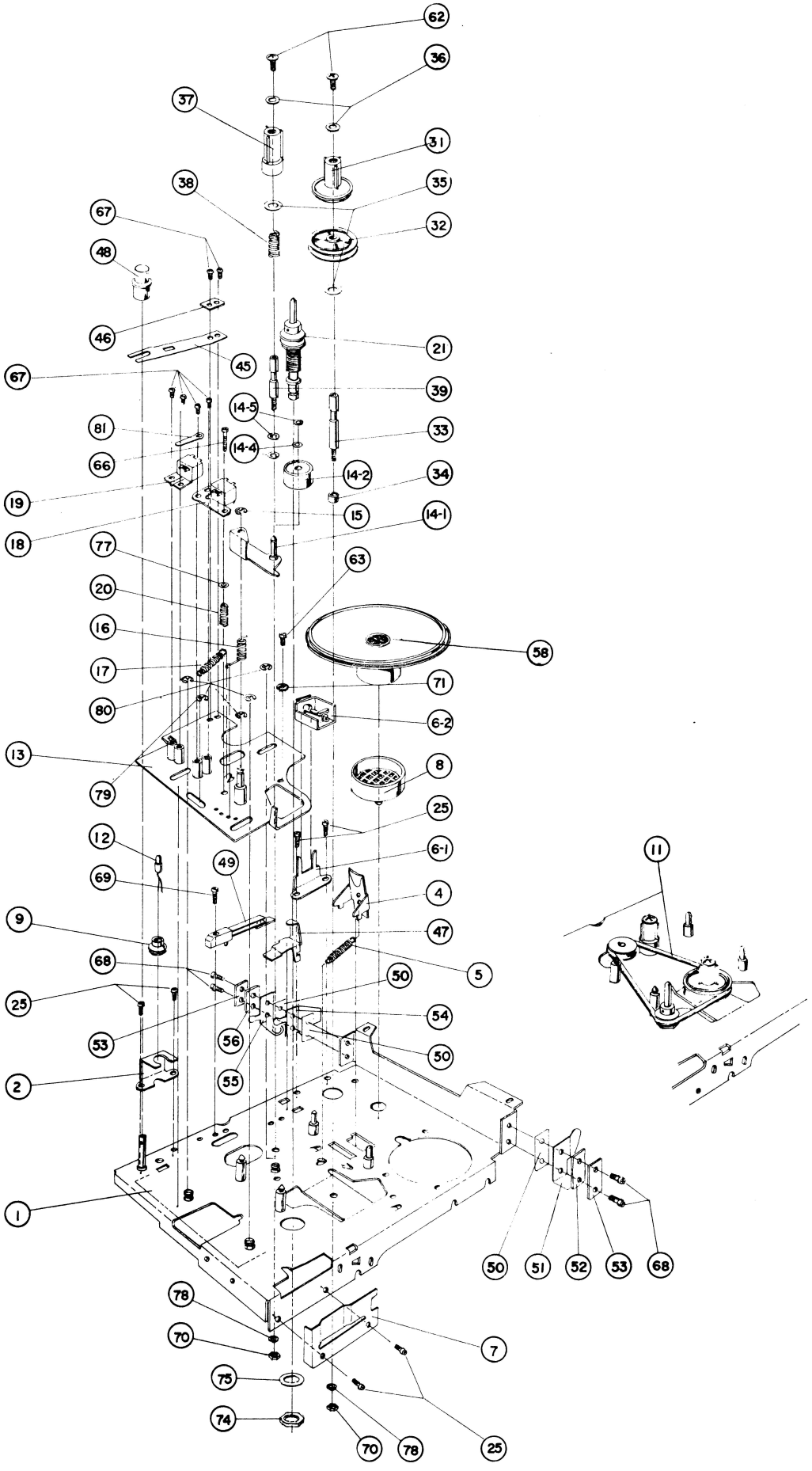

KEY NO.	PARTS NO.	DESCRIPTION	Q'ty
54	KR4-23041	Terminal A, battery	1
55	KR4-23042	Terminal B, battery	1
56	KR4-31322	Polycarbonate spacer, terminal A and B	1
57	KR-E1035	Switch, power	1
58	KR-V1011	Speaker	1
59	KR-M1008	Assembly, Motor	1
60	KR-E3032	3-P jack	1
61	KR-31430	Knob, volume control	1
62	KR-24039	Screw, 2.6mm×4mm, Truss head, Phil.	2
63	KR-15102	Screw, 2.6mm×8mm, Pan-head, Phil.	1
64	KR-15103	Screw, 2.6 mm×6mm, Pan-head, Phil.	5
65	KR-15104	Screw, 2.6 mm×4mm, Pan-head, Phil.	2
66	KR-15105	Screw, 2mm×14mm, Pan-head, Phil.	1
67	KR-15106	Screw, 2mm×4mm, Pan-head. Phil.	6
68	KR-15107	Self tapping screw, 2.6mm×8mm Pan-head, Phil.	4
69	KR-15108	Self tapping screw, 2.6mm×10mm Pan-head, Phil.	1
70	KR-24054	Hexagon nut, 2.3ϕ	2
71	KR-24055	Hexagon nut, 2.6ϕ	1
72	KR4-25122	Screw, Rec/Play switch lever	1
73	KR4-25133	Hexagon nut, 6ϕ; flywheel	1
74	KR4-25134	Hexagon nut, 9ϕ; capstan shaft holder	1
75	KR4-11295	Washer, 9.2ϕ×15ϕ; Capstan shaft	1
76	KR4-11297	Washer, 6.2ϕ×12ϕ; flywheel	1
77	KR-11325	Washer, rec/play head 2ϕ	1
78	KR-14054	Spring washer, 2.3ϕ; reel spindle	2
79	KR-14055	C clamp, 2.5ϕ	2
80	KR-11218	C clamp, 3ϕ	4
81	KR4-11194	Wire clamp	1

PARTS NO.	DESCRIPTION	Q'ty
Cabinet		
KR1-31425-9	Assembly, cabinet front	1
KR4-11329	Hanger, hand strap	2
KR-15112	Screw, truss 2.6mm×8mm to fix hand strap hanger to cab. front	2
KR-15109	Screw, oval head 2.6mm×5mm to fix function knob to chassis	1
KR-15113	Hexagon nut 2.6ϕ, mounting hanger	2
KR1-31426-3	Assembly, cabinet back	1
KR2-31427	Lid, cassette compartment	1
KR2-31429	Lid, battery compartment	1
KR-15110	Screw, 3mm×12 mm, bind head, Phil. mounting cabinet front to chassis	2
KR-15093	Screw, 3mm×8mm, bind head, Phil.	2
KR-11163	Screw, 3mm×6mm, pan head, Phil. mounting PCB to post of PCB	2
KR-15114	Screw, 3mm×8mm Pan head, Phil; mounting chassis to cabinet front	2
KR-39055	Hand strap	1
KR-Y1042	Microphone, dynamic, imp. 200 ohm	1
KR-32053	Microphone pouch	1
KR-34274	Instruction booklet	1
KR2-31432	Polystyrene box, upper, packing	1
KR2-31433	Polystyrene box, bottom, packing	1
KR4-34193	Individual carton box. packing	1

SYMBOL NO.	PARTS NO.	DESCRIPTION	Q,ty
Capacitors			
C2, 8, 13, 25	KR-C9002	Electrolytic cond. 10μF/10wv	4
C5, 6, 7	KR-C9003	Electrolytic cond. 30μF/6wv	3
C3, 11, 12, 14, 24	KR-C9004	Electrolytic cond. 50μF/10wv	5
C-17	KR-C9006	Electrolytic cond. 200μF/10wv	1
C-21	KR-CM0003M	Mylar cond. 300pF	1
C4, 19, 20	KR-CM0005M	Mylar cond. 500pF	3
C-15, 16	KR-CM01M	Mylar cond. 0.01μF	2
C-1, 10, 22	KR-CM033	Mylar cond. 0.033μF	3
C-9	KR-CM047M	Mylar cond. 0.047μF	1
C-23	KR-CM1M	Mylar cond. 0.1μF	1
C-18	KR-CM10	Alsicon 1.0μF	1
Resistors			
R-25	KR-R2.2K	2.2 ohm, 1/4w, 10%	1
R-2	KR-R10K	10 ohm 〃 〃	1
R-18	KR-R18K	18 ohm 〃 〃	1
R-27	KR-R39K	39 ohm 〃 〃	1
R-6	KR-R47K	47 ohm 〃 〃	1
R-34	KR-R68K	68 ohm 〃 〃	1
R-24	KR-R100K	100 ohm 〃 〃	1
R-26, 22, 35	KR-R180K	180 ohm 〃 〃	3
R-31	KR-R220K	220 ohm 〃 〃	2
R-33	KR-R330K	330 ohm 〃 〃	1
R-19	KR-R470K	470 ohm 〃 〃	1
R-21	KR-R560K	560 ohm 〃 〃	1
R-5, 15, 16	KR-R1KK	1 kohm 〃 〃	3
R-1	KR-R1.2KK	1.2 kohm 〃 〃	1
R-9, 23	KR-R1.8KK	1.8 kohm 〃 〃	2
R-11, 12	KR-R2.2KK	2.2 kohm 〃 〃	2
R-8	KR-R2.7KK	2.7 kohm 〃 〃	1
R-18	KR-R8.2KK	8.2 kohm 〃 〃	1
R-3	KR-R10KK	10 kohm 〃 〃	1
R-10, 13	KR-R12KK	12 kohm 〃 〃	2
R-4, 7	KR-R18KK	18 kohm 〃 〃	2
R-32	KR-R22KK	22 kohm 〃 〃	1
R-17	KR-R39KK	39 kohm 〃 〃	1
R-14	KR-R47KK	47 kohm 〃 〃	1
R-28	KR-120KK	120 kohm 〃 〃	1
R-29, 30	KR-150KK	150 kohm 〃 〃	2
Variable Resistors			
VR-1	KR-G1030	A-10 kohm, volume control	1
VR-2	KR-G1018	B-100 kohm, recording bias oscillator	1
VR-3	KR-G1031	B-200 ohm, recording level indicator	1
Transformers and Coils			
T-1	KR-N1015	Input transformer	1
T-2	KR-N1016	Output transformer	1
T-3	KR-N1014	Oscillator coil	1
Transistors and Thermister			
Q-1	KR-Q1010	2SB303, 1ts audio amplifier	1
Q-2, 3	KR-Q1011	2SB186' 2nd and 3rd amplifier	2
Q-4, 5, 6	KR-Q1012	2SB22, power stage	2
		Bias oscillator	1
TH-1	KR-Q4005	SDT-09	1
Switches			
S-1 . . . 8	KR-E1028	Slide switch, record/play	1
Miscellaneous			
PCB	KR3-33045	Printed circuit board without components.	1
PCB-A	KRA-33045	Printed circuit board with components.	1

EXPLODED VIEW

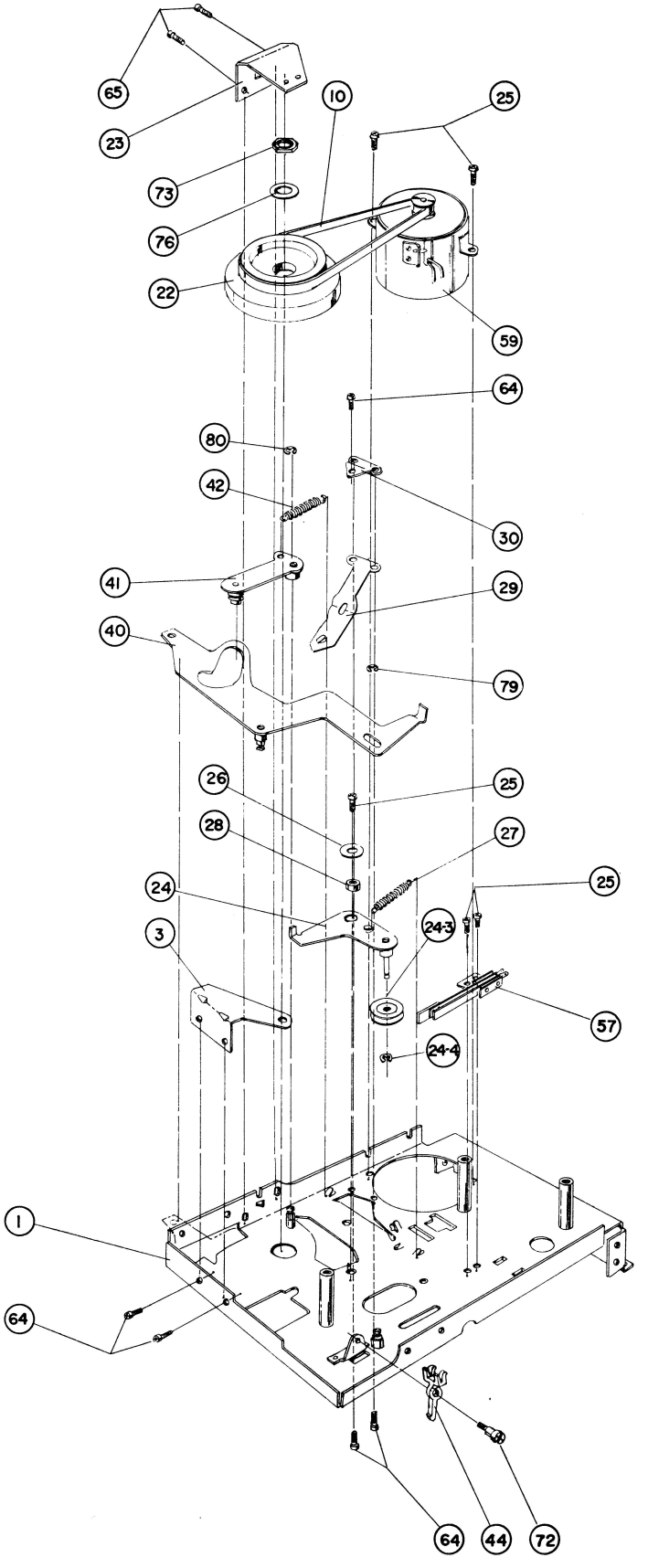

BOTTOM VIEW