eurovox

Service Manual

MODEL KA-2130

SPECIFICATIONS

Maximum output power at 14.4V DC:

STEREO MODE ..... 2 or 4 Ohm ..... 65 Watts per channel

MONO MODE ..... 4 or 8 Ohm ..... 130 Watts

Output power at 1% THD 4 Ohm ..... 60 Watts per channel

Frequency response ..... 18—25000 Hz

Signal/Noise ratio ..... 70 dB

Total Harmonic Distortion, 40W ..... Less than 0.1%

Channel separation ..... 50 dB

Low Level Input ..... 100mV—1V Continuously adjustable @ 10K Ohms (RCA Jacks)

High Level Input ..... 2.5V @ 100 Ohms

Fuse ..... Power Line 15A

Slew Rate ..... 20 Volts/Microsecond

Dimensions ..... 70mm × 170mm × 230mm (H × W × D)

WIRING DIAGRAM

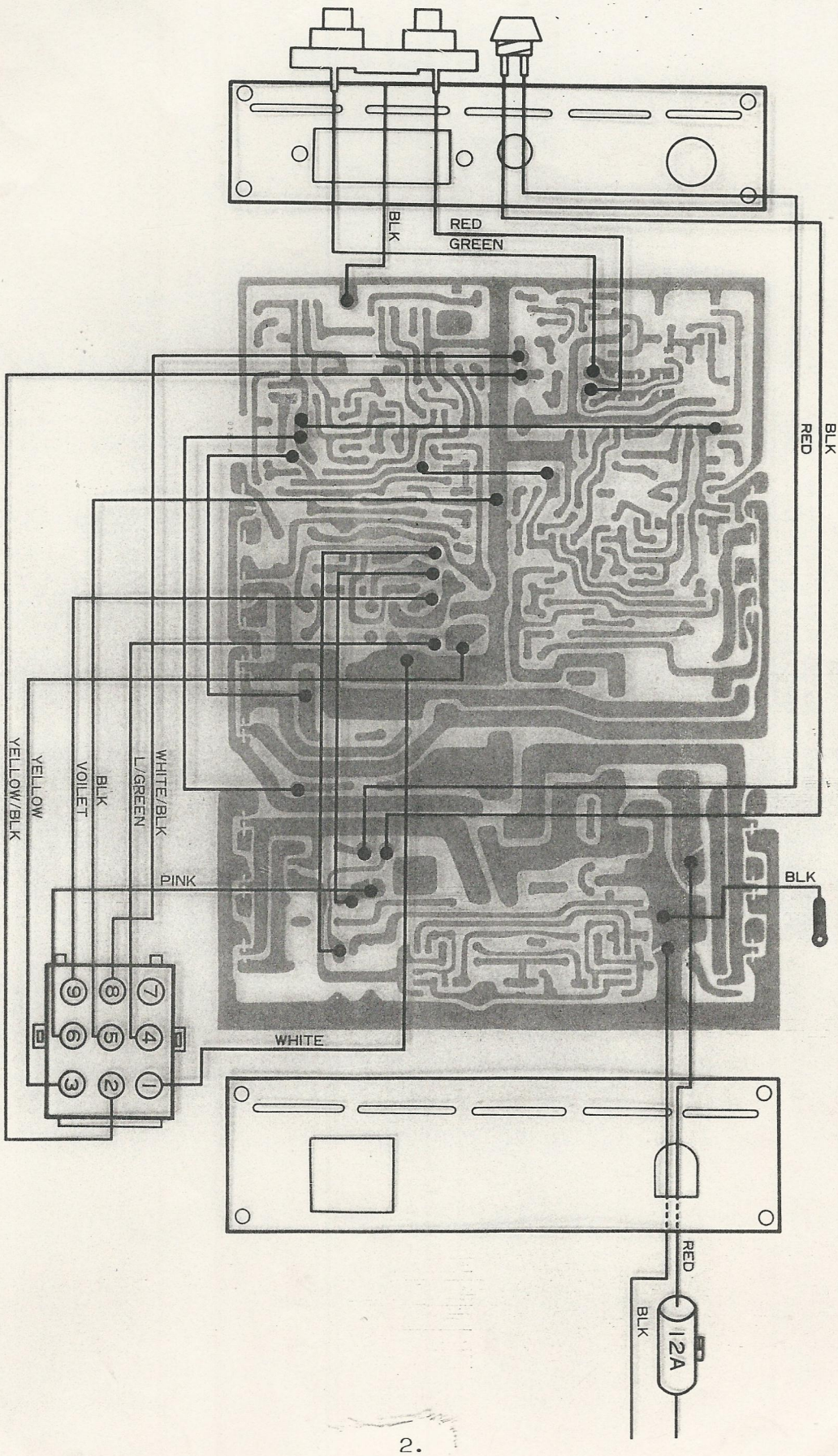

PRINTED CIRCUIT BOARD

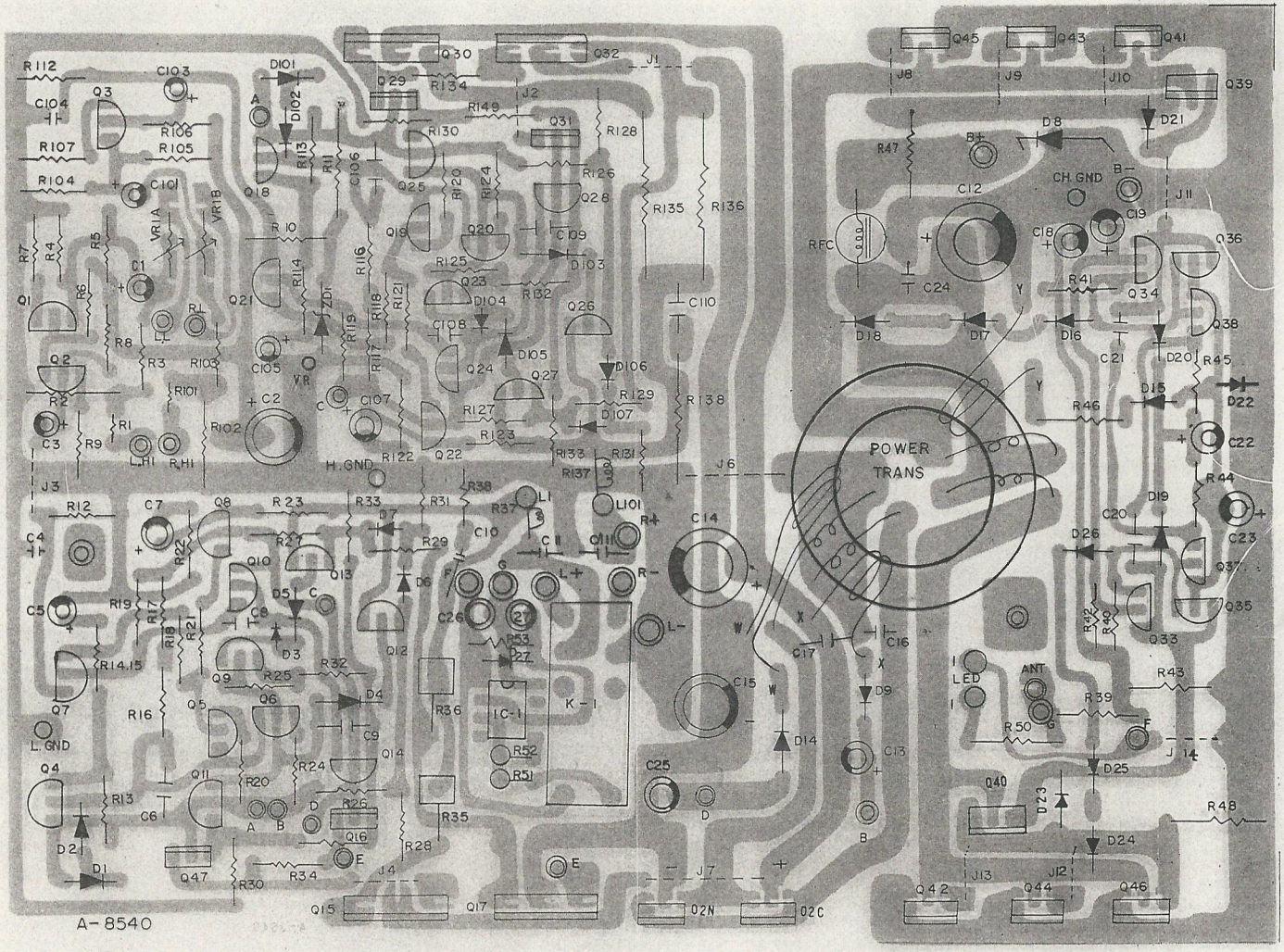

EXPLODED VIEW PARTS LIST

REF. NO.	DESCRIPTION	Q'TY
1	Bottom Cover	1
2	Front Cover	1
3	Rear Cover	1
4	Side Cover	1
5	Heat Sink (Right)	1
6	Heat Sink (Left)	1
7	Name Plate	1
8	R.C.A Phone Jack	1
9	Ground Terminal	1
10	Fuse Holder	1
11	Rubber Ring	4
12	Volume Knob	1
13	Cord Stopper	1
14	Molex Plug Assembly AH * 014	1
15	Molex Socket Assembly AH * 015	1
16	T.R M.T.G. Bracket (40x12x2t)	2
17	T.R M.T.G. Bracket (36x12x2t)	2
18	T.R M.T.G. Bracket (25x12x2t)	1
19	Tapping Screw (B.H) T3x6 BLK	14
20	Maching Screw (P.H) M3x12 BLK	2
21	Maching Nut Screw M3x14	6
22	Maching Screw (F.H) M3x12 ZN Plating	7
23	Spring Washer	6
24	Nut 3ø	6
25	Tapping Screw (T.H) T4x12 BLK	4
26	Plate Washer 4ø	4

EXPLODED VIEW PARTS LIST

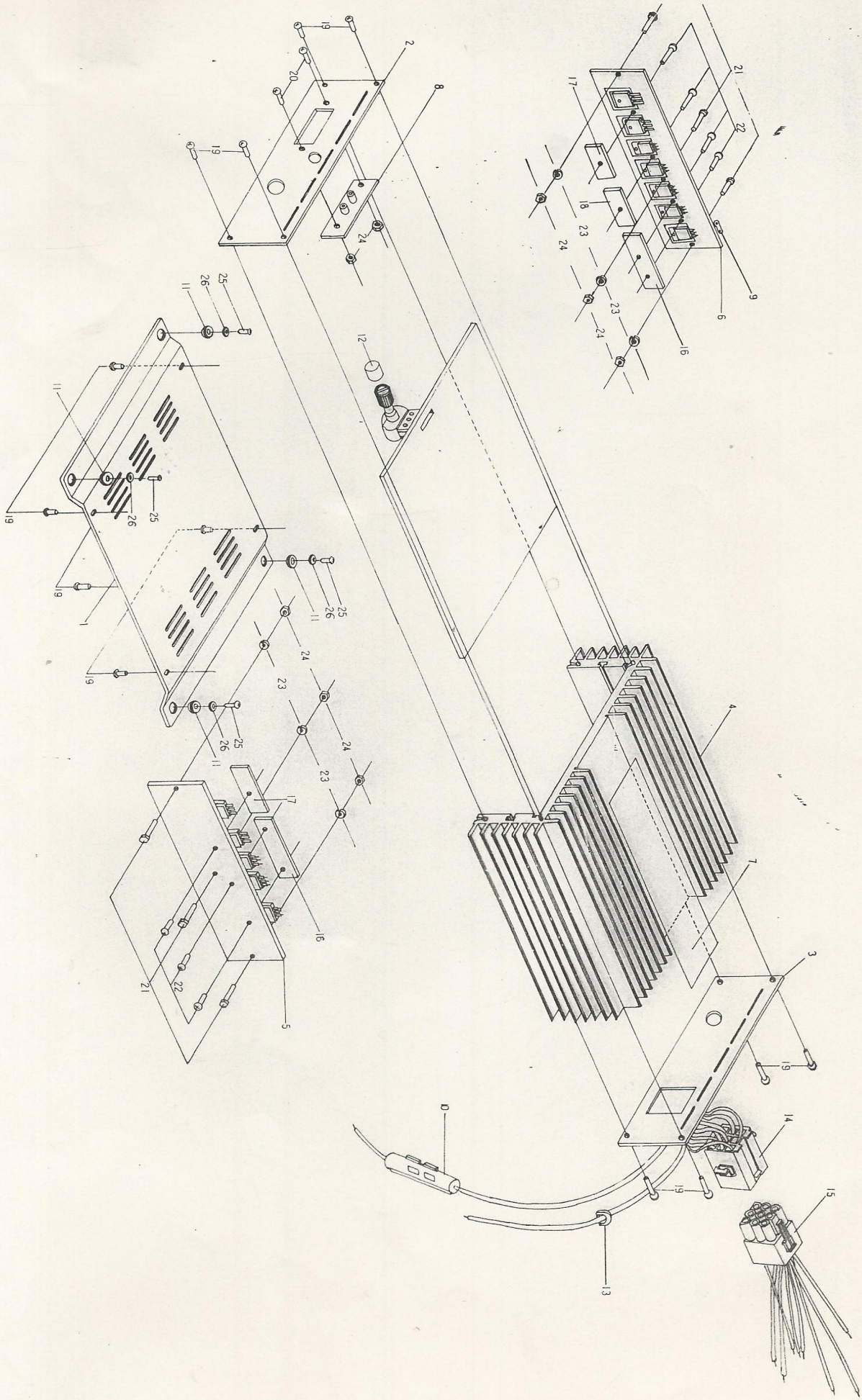

ELECTRICAL PARTS LIST

REF. NO.	DESCRIPTIONS	PART NO.
	I.C	
IC.1	NE555	ETI*NE-555
	TRANSISTOR	
Q47,29.	2SD600E	ETTD*2SD-600E
Q16,31.	2SB631E "	ETTB*2SB-631B
Q15,30.	2SD 1046E	ETTD*2SD-1046E
Q17,32.	2SB 817E	ETTB*2SB-817E
Q1,3.	2SC 1815 O	ETTC*2SC-1815O
Q2,9-12,23-26,33,34,37,38.	2SC 1815 Y	ETTC*2SC-1815Y
Q7,8,21,22.	2SA 1015 O	ETTA*2SA-1015O
Q5,6,13,14,19,20,27,28.	2SA 1015 Y	ETTA*2SA-1015Y
Q35,36.	2SA 965 Y	ETTA*2SA-965Y
Q39,40.	2SD1061	ETTD*2SD-1061
Q41-46.	2SD1062	ETTD*2SD-1062
Relay	HR - CR323	ESR*001
D8.	GSA30B (SILICON DIODE)	ETD*GSA-30B
D9,14,51,21,23.	DFB05C (")	ETD*DFB-05B
D12,13.	ESAC-25-02N (FAST RECOVERY DIODE)	ETD*ESAC-25-02N
D10,11.	ESAC-25-02C (")	ETD*ESAC-25-02C
D1-7,101-107,16-20,22,	1S1555 (SWITCHING DIODE)	ETD*1S-1555
ZD1. DZB20C (1W 20V)	DZB20C (1W 20V)	ETD*DZB-20C
RFC-1.	RFC BAR TYPE 916uH	ELS*003
L1,101.	RFC (5uH)	ELS*002
	TOROID MAGNET CORE	ELS*004
T1.	IR 8017	
	VARIABLE RESISTOR	
VR1A, VR1B.	K162B00 50KBx2	ECRV*003
	CARBON FILM RESISTOR	
R24,124.	130 ohm ¼W	
R34,134.	220 " "	
R22,122.	390 " "	
R7,107.	470 " "	
R28,128,29,129,49,149.	1K " "	
R32,132,42.	1.5K " "	
R18,118,21,121.	2.4K " "	
R6,106,8,9.	2.7K " "	
R20,120.	3.3K " "	
R25,125,44,45.	3.9K " "	
R17,117,16,116,52,19,119, 23,123,31,131.	10K " "	
R3,103,4,104.	12K " "	
R40,41.	33K " "	
R51.	22K " "	
R30,130,33,133.	100K " "	
R26,126,27,127.	180K " "	
R5,105.	68K " "	
R12,112.	18K " "	
R53.	220K " "	

REF. NO.	DESCRIPTIONS	
R46.	2 ohm	½W
R2,102,39.	10 "	"
R10,47,48.	100 "	"
R50.	1K "	"
R43.	2.2K "	"
	METAL OXIDE RESISTOR	
R11.	470 ohm	1W
R38,138,37,137.	10 "	2W
R1,101.	100 "	2W
	CEMENT RESISTOR	
R35,135,36,136.	0.2 ohm	3W
	ELECTROLYTIC CAPACITOR	
C1,101.	Bi-Polar	10uF/16V
C18,19.	(5x11)	10uF/25V
C32.	(5x11)	47uF/10V
C7,107,13,25.	(8x11.5)	100uF/16V
C23.	(8x11.5)	220uF/10V
C12.	(16x31.5)	1000uF/50V
C2.	(16x25)	1000uF/25V
C14,15.	(18x35.5)	2200uF/35V
C3,103.	(5x11)	2.2uF/16V
C26,27.		10uF/16V
	CERAMIC CAPACITOR	
C8,108.	5pF 50V	
C16,17.	1000pF 50V	
C24.	0.1uF 50V	
	MYLAR CAPACITOR	
C10,11,110,111.	0.1uF 50V	
C20,21.	0.0047uF 50V	
	STYROL CAPACITOR	
C4,104.	680pF	
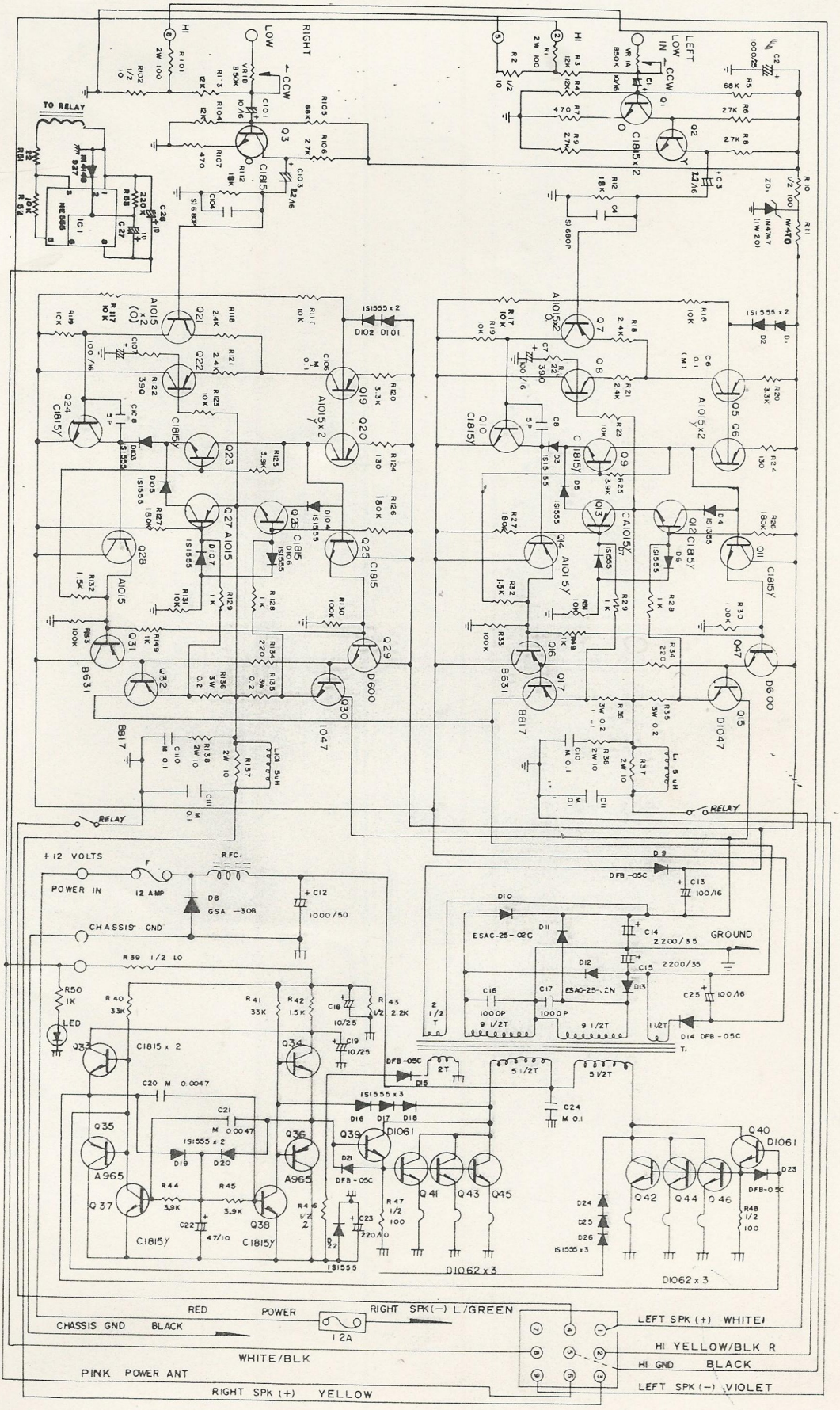
SCHEMATIC DIAGRAM