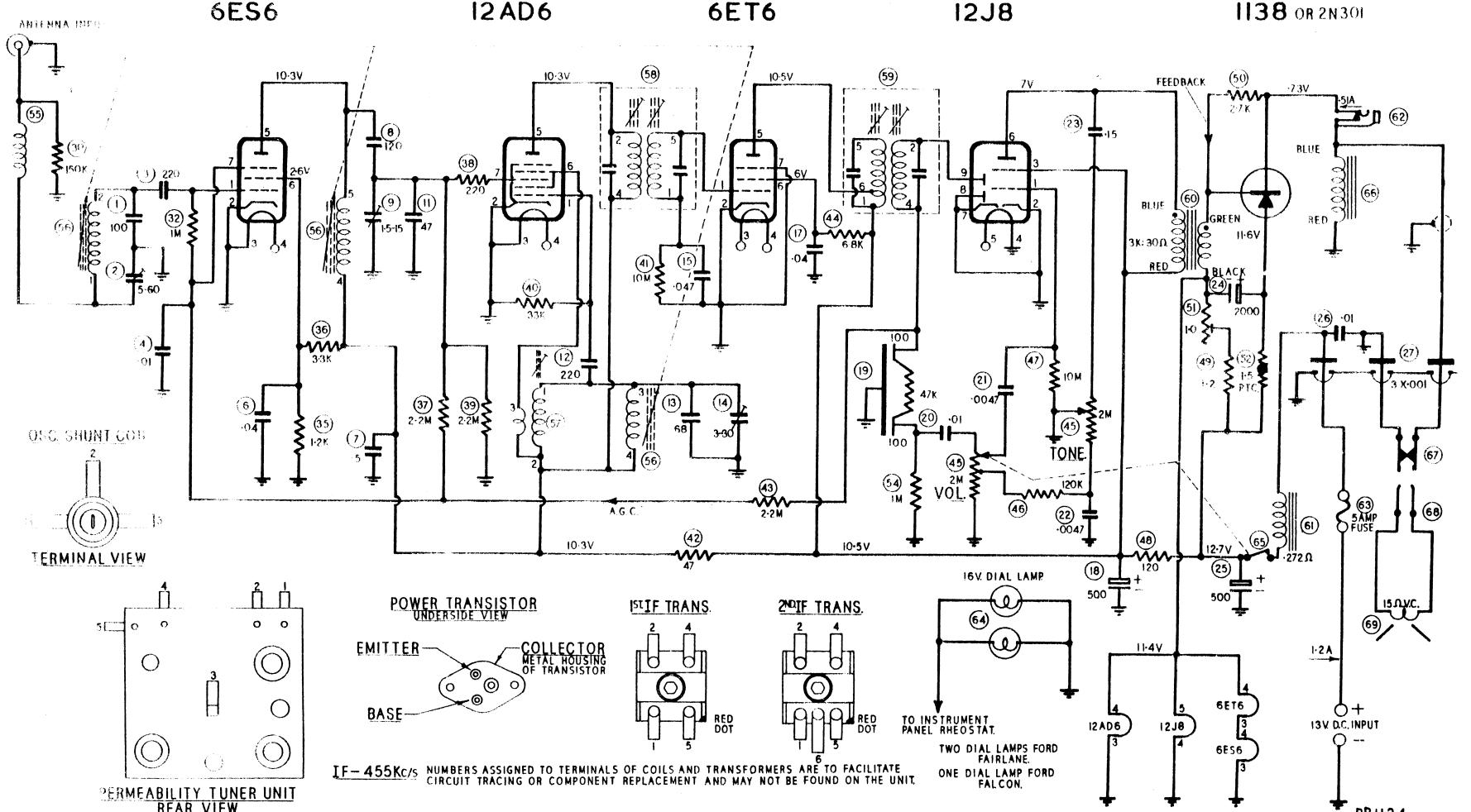


IF-455Kc/s NUMBERS ASSIGNED TO TERMINALS OF COILS AND TRANSFORMERS ARE TO FACILITATE CIRCUIT TRACING OR COMPONENT REPLACEMENT AND MAY NOT BE FOUND ON THE UNIT.

ALL VOLTAGES MEASURED BETWEEN POINTS INDICATED AND CHASSIS WITH A D.C. VACUUM TUBE VOLTMETER. NO INPUT SIGNAL.

# MODEL-JXQ MANUAL TUNING
## NEGATIVE TO CHASSIS

IMPORTANT: REFER TO SERVICE BULLETIN JXQ-1 FOR INSTRUCTIONS BEFORE ADJUSTING COLLECTOR CURRENT OF 1138 OR 2N301.