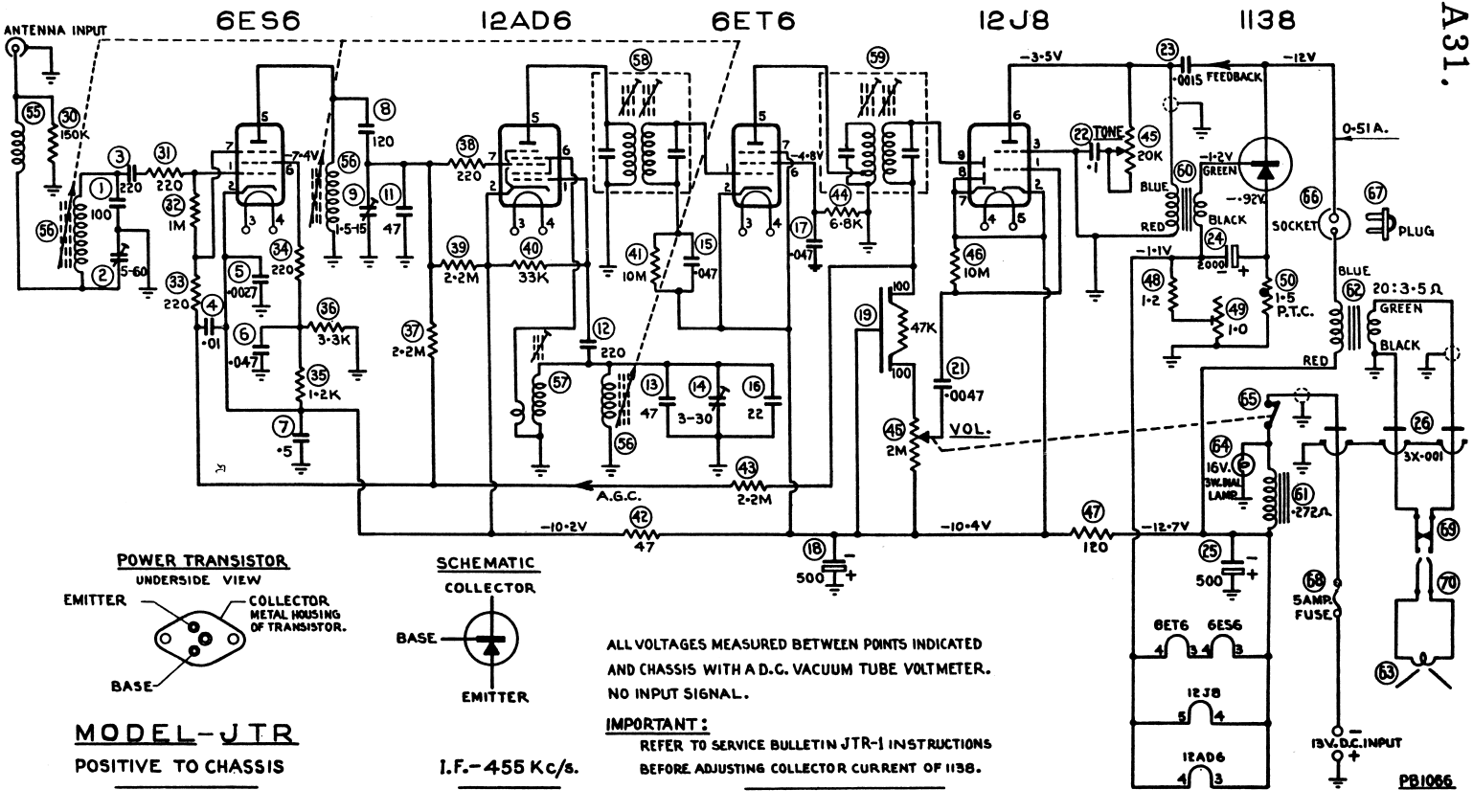

POWER TRANSISTOR

UNDERSIDE VIEW

EMITTER

COLLECTOR METAL HOUSING OF TRANSISTOR.

BASE

SCHEMATIC

COLLECTOR

BASE

EMITTER

ALL VOLTAGES MEASURED BETWEEN POINTS INDICATED AND CHASSIS WITH A D.C. VACUUM TUBE VOLTMETER. NO INPUT SIGNAL.

IMPORTANT:

REFER TO SERVICE BULLETIN JTR-1 INSTRUCTIONS BEFORE ADJUSTING COLLECTOR CURRENT OF 1138.

MODEL-JTR

POSITIVE TO CHASSIS

I.F.-455 Kc/s.