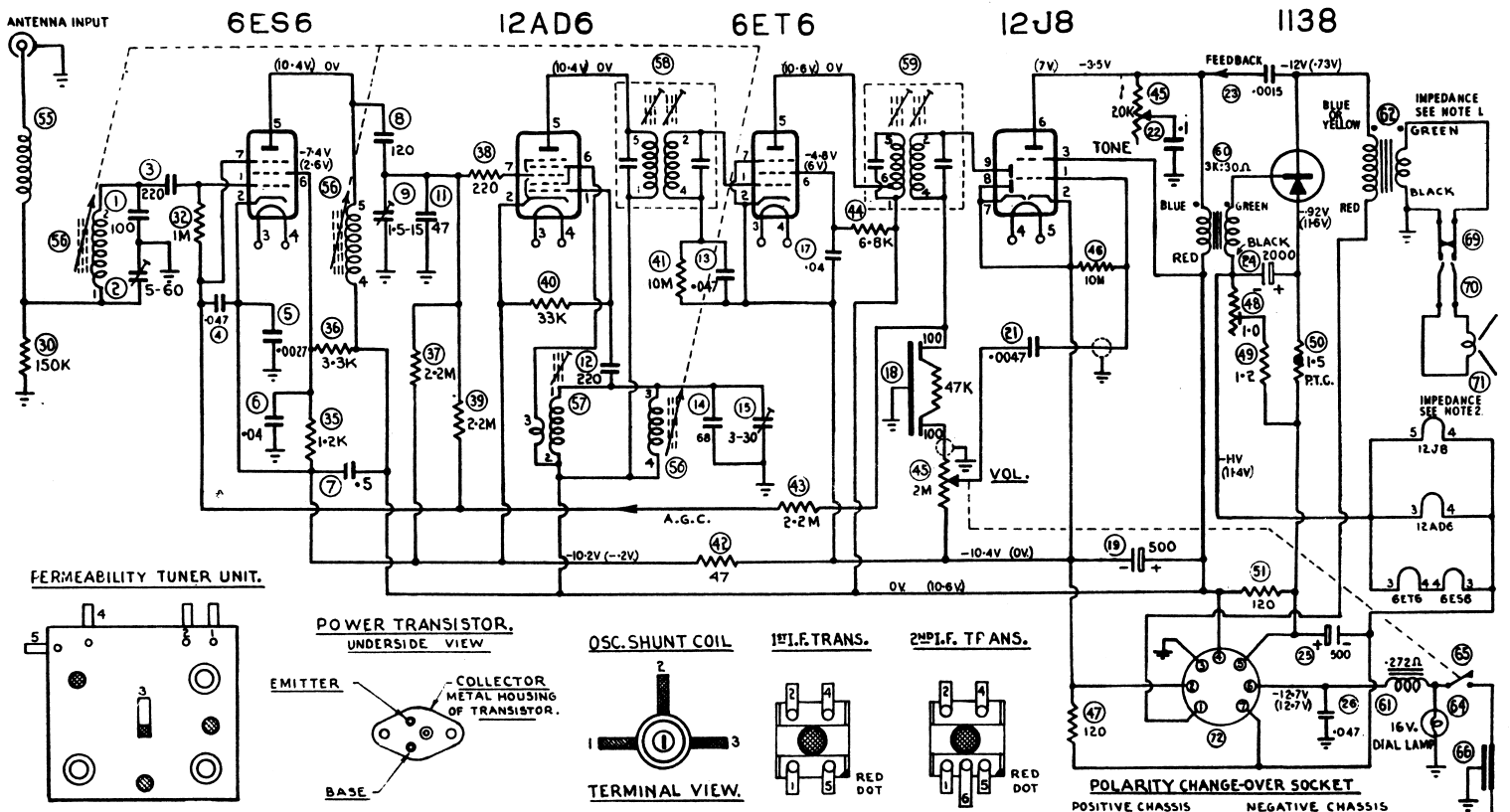
ANTENNA INPUT
6ES6
12AD6
6ET6
12J8
1138
FEEDBACK
TONE
VOL.
A.G.C.
IMPEDANCE SEE NOTE 1
IMPEDANCE SEE NOTE 2
12J8
12AD6
6ET6
6ES6
16V. DIAL LAMP
5AMP FUSE
13V.D.C. INPUT
FERMEABILITY TUNER UNIT.
POWER TRANSISTOR.
UNDERSIDE VIEW
EMITTER
COLLECTOR METAL HOUSING OF TRANSISTOR.
BASE
OSC. SHUNT COIL
TERMINAL VIEW.
1ST I.F. TRANS.
2ND I.F. TRANS.
RED DOT
POLARITY CHANGE-OVER SOCKET
POSITIVE CHASSIS
NEGATIVE CHASSIS
PIN VIEW
POLARITY CHANGE-OVER PLUGS
I.F.—455 Kc/s.
NUMBERS ASSIGNED TO TERMINALS OF COILS AND TRANSFORMERS ARE TO FACILITATE CIRCUIT TRACING OR COMPONENT REPLACEMENT AND MAY NOT BE FOUND ON THE UNIT.
VOLTAGE READINGS IN BRACKETS REFER TO NEGATIVE CHASSIS CONDITIONS.
ALL VOLTAGES MEASURED BETWEEN POINTS INDICATED AND CHASSIS WITH A D.C. VACUUM TUBE VOLTMETER.
NO INPUT SIGNAL.
MODEL—JSW MANUAL TUNING
POSITIVE OR NEGATIVE TO CHASSIS
WARNING: CORRECT POLARITY PLUG MUST BE INSERTED INTO POLARITY SOCKET BEFORE RECEIVER IS CONNECTED TO BATTERY.
IMPORTANT:—REFER TO SERVICE BULLETIN JSW-1 FOR INSTRUCTIONS BEFORE ADJUSTING COLLECTOR CURRENT OF 1138.
PB1109
NOTE 1. TRANSFORMER IMPED, FIRST PRODUCTION, 20:3·5 OHMS. LATER PRODUCTION, 20:15 OHMS NOTE 2. SPEAKER VOICE COIL IMPED, FIRST PRODUCTION, 3·5 OHMS, LATER PRODUCTION, 15 OHMS.
ISSUE 2. CIRCUIT NO. 4 WAS CONNECTED TO CHASSIS. CIRCUIT NO. 37 WAS CONNECTED TO POSITIVE LINE. CIRCUIT NO. 26 ADDED

A30