AIR CHIEF

CAR RADIO SERVICE DATA
MODELS JP20B JM20B

PUSHBUTTON & MANUAL 11 TRANSISTOR
12 VOLT NEGATIVE TO CHASSIS

DESIGNED FOR HOLDEN TORANA LH

CONNECT POWER LEAD OF RECEIVER TO POSITIVE BATTERY TERMINAL ONLY. RECEIVER WILL BE DAMAGED IF CONNECTED TO INCORRECT POLARITY.

CAR RADIO DIVISION, PHILIPS CONSUMER PRODUCTS
1092 CENTRE ROAD, CLAYTON, VIC., 3168. Ph.544-2444

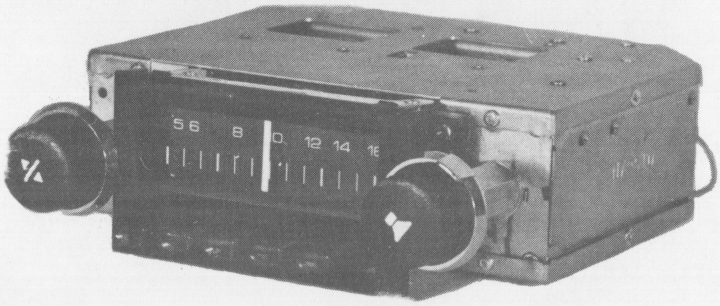

AIR CHIEF

CAR RADIO SERVICE DATA
MODELS JP20B JM20B

PUSHBUTTON & MANUAL 11 TRANSISTOR
12 VOLT NEGATIVE TO CHASSIS

DESIGNED FOR HOLDEN TORANA LH

CONNECT POWER LEAD OF RECEIVER TO POSITIVE BATTERY TERMINAL ONLY. RECEIVER WILL BE DAMAGED IF CONNECTED TO INCORRECT POLARITY.

CAR RADIO DIVISION, **PHILIPS CONSUMER PRODUCTS**
1092 CENTRE ROAD, CLAYTON, VIC., 3168. Ph.544-2444

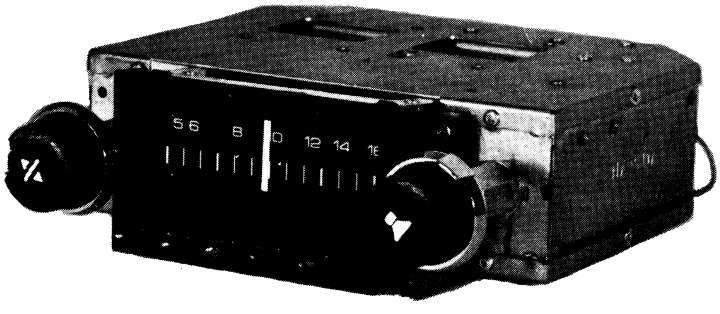

COMPONENT LAYOUT - JP20B & JM20B

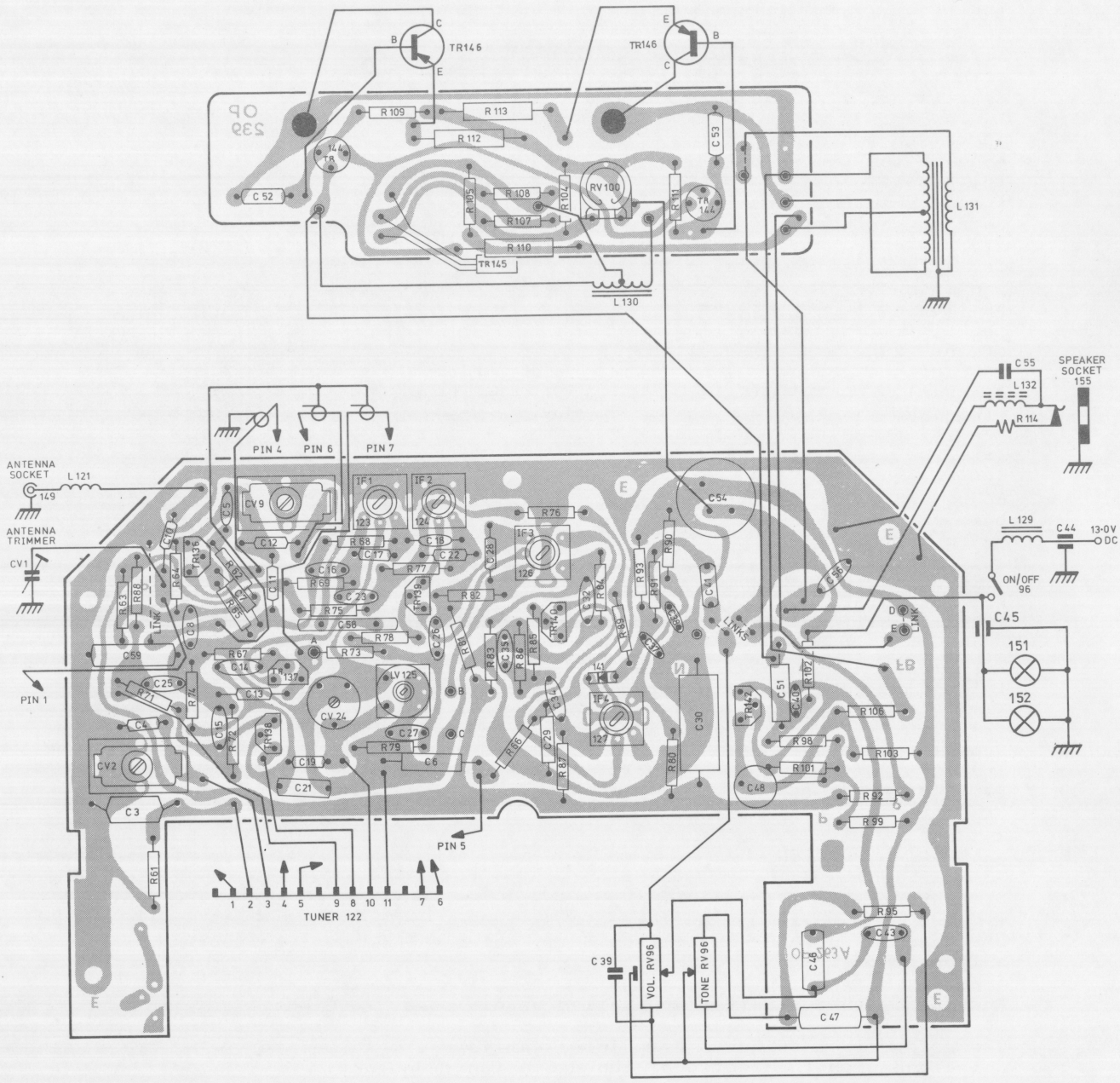

TOP SIDE

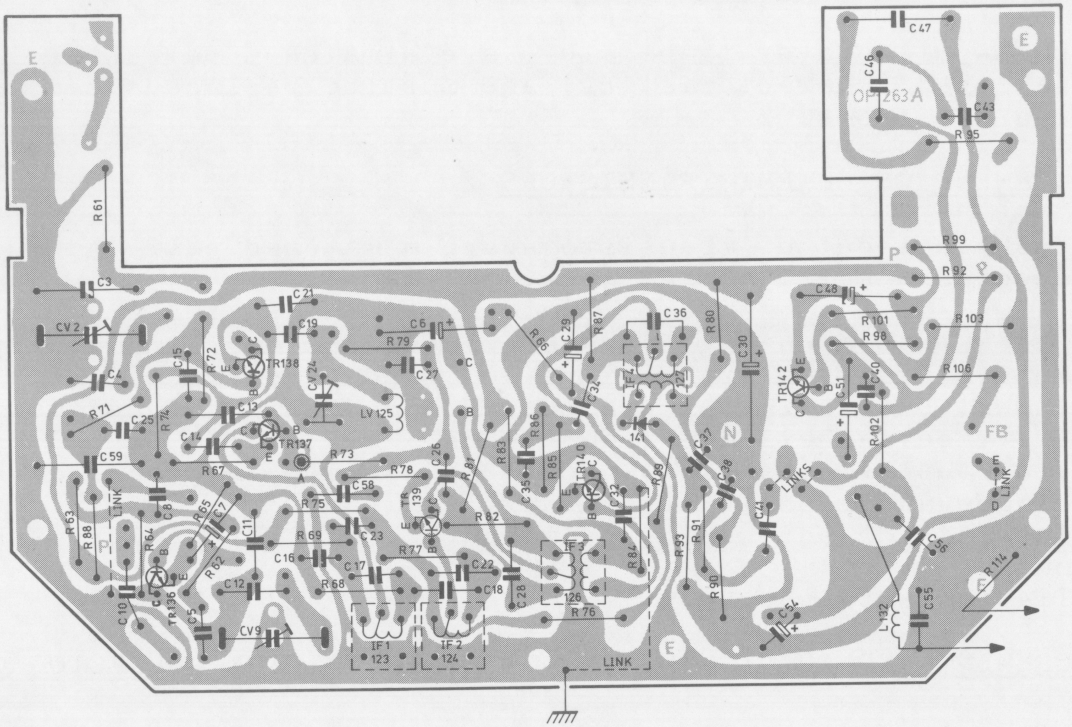
C47
C46
OP 263A
C43
R95
R61
R99
R92
C3
C48
C21
CV2
C19
C6
R79
R96
C29
R87
C36
R80
C30
R101
R98
R103
C4
C15
R72
TR138
C27
CV24
C32
TF7
TR142
C51
C40
R106
R71
C25
R74
C13
LV125
R86
R102
C14
TR137
R73
C59
R67
R78
C26
R89
R83
R95
TR140
C27
C38
R88
R99
FB
LINK
C58
TR139
C35
C32
C54
R63
R88
LINK
R65
C7
C8
R75
R82
C23
R91
C4
LINKS
C50
R64
C11
R69
R77
R84
R93
R114
C10
TR136
R62
C16
C22
TF4
C12
C17
C18
R90
C54
C55
L132
C5
R68
C28
R76
CV9
IF1
123
IF2
124
LINK
R110
R107
RV100
TR144
C52
TR145
R105
R108
R104
R111
C53
TR144
TR146
R112
TR146
R109
R113
OP
239

UNDERSIDE

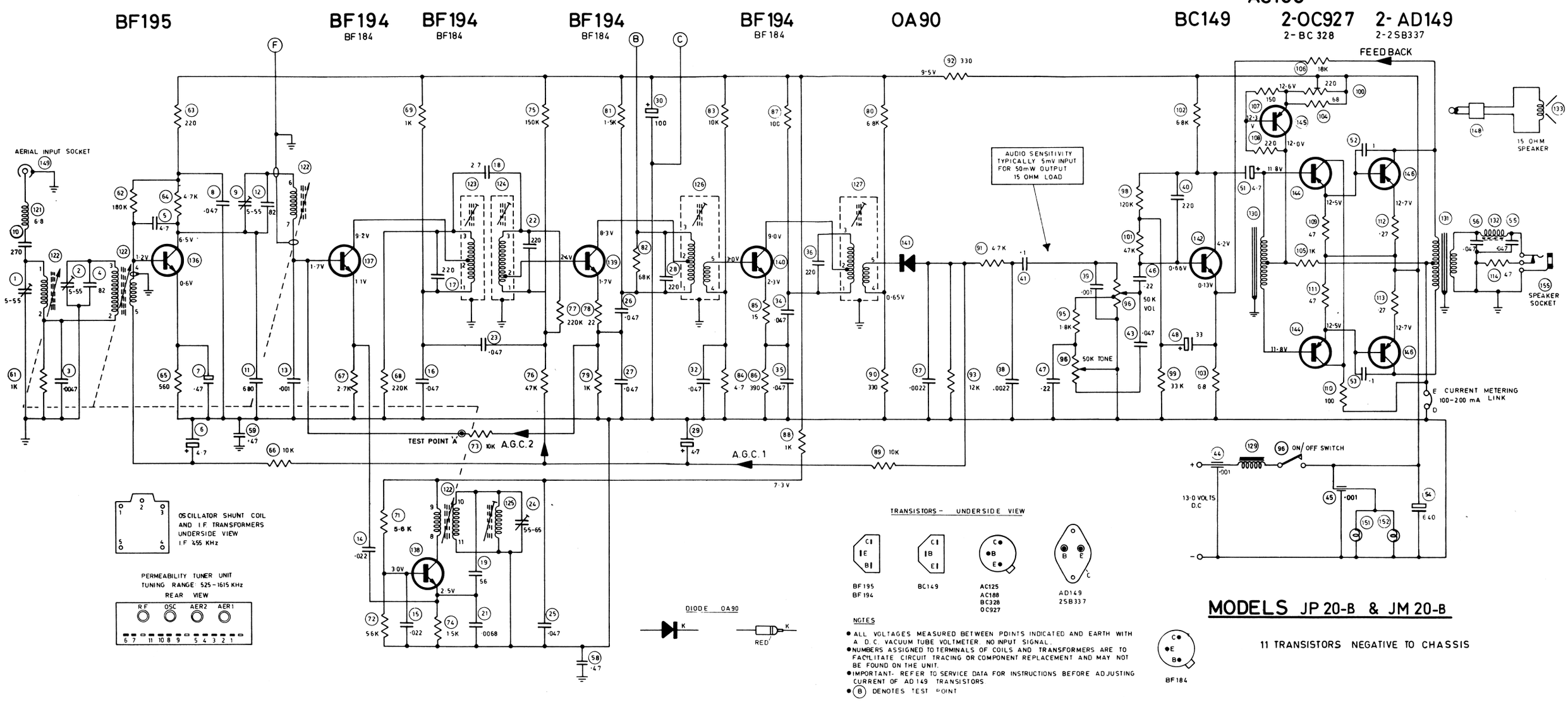

MODELS JP 20-B & JM 20-B

11 TRANSISTORS NEGATIVE TO CHASSIS

TUNING RANGE: 525 - 1630 kHz
INTERMEDIATE FREQUENCY: 455 kHz
SUPPLY VOLTAGE: 13 V DC
CURRENT CONSUMPTION: 300 mA (TYPICAL)
POWER OUTPUT: 8 W
SPEAKER IMPEDANCE: 15 ohms

REPLACEMENT OF DRIVER TRANSISTORS

The push-pull driver transistors are a matched pair (selected for similarity of characteristics) and must be replaced as a pair, not as separate items.

REPLACEMENT OF OUTPUT TRANSISTORS

The push-pull output transistors are a matched pair and must be replaced as a pair, not as separate items.

- Check that mounting faces are free from dust or metal particles.
- Remove existing transistors and wipe heat sink clean.
- Insert bushes in screw holes from underside of heat sink.
- Fit mica washers and transistors.
- From top of heat sink insert 3/8" screws in holes nearest lid hinges and loosely attach nut.
- Insert 5/8" screws in remaining holes. Fit spacer washers and nuts.
- Tighten nuts securely.

MEASUREMENT AND ADJUSTMENT OF OUTPUT TRANSISTOR COLLECTOR CURRENT

Equipment :
Current meter - 0 to 1 amp d.c.
Supply source - 13.0 V d.c.

Conditions :

Connect supply leads, negative to chassis. Connect 15 Ohm speaker to receiver output socket. Remove link D-E from circuit board. Connect current meter to pins (D negative, E positive). No signal is applied to antenna socket.

- Switch receiver on and set volume controls to minimum.
- Allow two minutes for set to stabilize.
- Adjust bias potentiometer (circuit number 100) to obtain a reading of 150 mA.

Note : No further adjustment should be necessary unless audio frequency stage components are changed.

Full broadcast alignment must be carried out when iron cores or tuning unit coil assembly have been replaced or if station logging is outside limits.

1. Connect i.f. attenuator to test pins B and C (resistor to pin C).

2. Turn permeability tuner to high frequency end of travel. Set all iron cores so no less than 4 mm. of shaft protrudes through the front panel of the receiver.

3. Attach frequency generator to antenna lead-in socket (in series with 100 pF dummy antenna). Set generator to 1625 kHz. Adjust oscillator, r.f. and both antenna trimmers for maximum output.

4. There are two slots in the side of the tuning unit at the opposite end to the tuning spindle; place the notched end of the gauge in slot near rear of tuner. The 1 cm gauge section is positioned against the projection at the front end of the slot. The spring fingers of the gauge are to be at the rear of the tongue. (see diagram). DO NOT STRAIN OR TILT CORE CARRIAGE. With generator and dummy antenna attached as in step three, set generator to 1000 kHz. Adjust oscillator, r.f. and both antenna iron cores for maximum output.

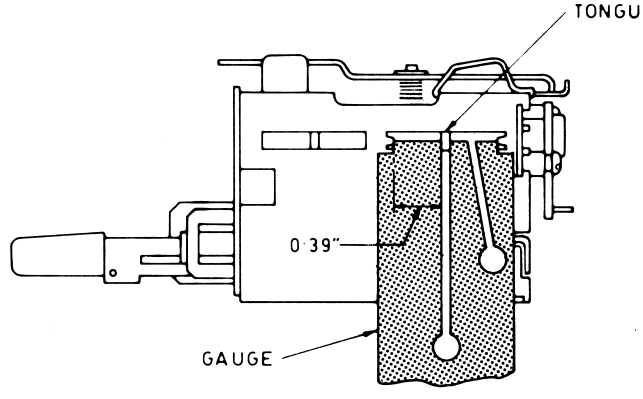

5. With generator and dummy antenna attached as in step three, set generator to 600 kHz. Rock tuning control through signal. Adjust oscillator shunt coil for maximum output.

6. Turn tuner control to low frequency end of travel. (iron cores full in). Tune signal generator to receiver. Low frequency limit to be between 510 and 525 kHz.

7. Repeat operation four.

8. Align dial pointer.

SETTING OF DIAL POINTER

1. Disconnect i.f. attenuator.

2. Disconnect generator cable from dummy antenna. Connect suitable antenna.

3. Accurately tune receiver to station on dial near 1000 kHz.

4. Use screwdriver to bend the pointer carriage arm so pointer coincides with the centre of tuned station frequency.

5. Check dial logging and readjust if necessary.

ANTENNA TRIMMER ADJUSTMENT

The antenna trimmer must be readjusted at conclusion of installation. Fully extend antenna. Retract inner sections until antenna is approximately half extended height. Tune receiver to weak station near 1000 kHz (centre of dial). Adjust knob at rear left corner of receiver for maximum output.

Note : If fully retractable antenna is used, pull large outer rod up against stop in antenna base.

ALIGNMENT PROCEDURE

EQUIPMENT

Signal generator:	Modulated 400 Hz.
Output meter:	15 Ohm impedance.
Generator series capacitor:	0.1 MF (for i.f. alignment).
I.F. attenuator:	Clip-on type, part no. 4121-014-01.
Dummy antenna:	100pF, PART No. 4121-041-01.
Alignment tools:	Flat metal blade for IFT and osc. shunt coil adjustment, part no. 4121-001-01.
	Tuning unit iron core adjustor, part no. 4121-008-01.
	Alignment gauge for adjusting tuner 1000 kHz position, part no. 4121-022-02.

CONDITIONS

Receiver	Top lid open.
Volume control:	Fully clockwise.
Tone control:	Fully clockwise.
Output meter:	Connected to receiver output socket (speaker disconnected)
Fader control:	Set fully to appropriate output.
Output level:	50mW.
Supply voltage:	Maintained at 13.0 V d.c.
Polarity:	Negative to receiver chassis, positive to receiver power lead.
Signal generator output:	Kept to minimum necessary.

I.F. TRANSFORMER ALIGNMENT

Tune receiver to high frequency end of band. Insert 0.1 MF capacitor in series with generator.

Set generator to 455 kHz and attach to base of mixer stage (raised end of 10k resistor, circuit no. 73) and return lead to negative line (pin C).

1. Adjust iron core of i.f. transformer no. 4 for maximum output. Use same generator connections and settings for all steps.
2. Adjust iron core of i.f. transformer no. 3 for maximum output.
3. Adjust iron core of i.f. transformer no. 2 for maximum output.
4. Adjust iron core of i.f. transformer no. 1 for maximum output.
5. Repeat steps 3 and 4 until maximum output is obtained.

BROADCAST ALIGNMENT

When receiver logging is satisfactory the signal circuits may be aligned as detailed :

1. Connect i.f. attenuator to test pins B and C (resistor to pin C).
2. Set generator to 1000 kHz.
3. Insert dummy antenna in antenna input socket and connect generator in series with input of dummy antenna.
4. Tune receiver to generator frequency and adjust r.f. and both antenna trimmers for maximum output.

TRANSISTORS

CIRCUIT REF. NO.	DESCRIPTION.	PART NUMBER.
136	TRANSISTOR - BF195	9330 229 70742
137	TRANSISTOR - BF194	9330 229 60742
138	TRANSISTOR - BF194	9330 229 60742
139	TRANSISTOR - BF194	9330 229 60742
140	TRANSISTOR - BF194	9330 229 60742
141	DIODE - OA90	9330 000 40742
142	TRANSISTOR - BC149	9330 358 20742
144	TRANSISTOR - 2-OC927 (MATCHED PAIR)	9331 795 00742
145	TRANSISTOR - AC188 (TEMP. COMPENSATION)	9330 228 20192
146	TRANSISTOR - 2-AD149 (MATCHED PAIR)	9330 008 60742

MISCELLANEOUS

DESCRIPTION.	PART NUMBER.
PERMEABILITY TUNER, PUSH BUTTON	3102 308 50531
PERMEABILITY TUNER, MANUAL	3102 308 50401
DIAL POINTER	3102 301 49501
DIAL LAMPS (1·2 W 12V)	4068-020-01
DIAL BACKGROUND ASSY.	3102 307 86091
LIGHT FILTER	3102 304 28022
DIAL	3102 305 00441
ESCUTCHEON MANUAL	3102 307 98271
ESCUCHEON, PUSH BUTTON	3102 307 98261
KNOB ASSY. FRONT TUNING	3102 307 52331
KNOB ASSY. REAR	3102 307 52341
KNOB ASSY. FRONT VOLUME	3102 307 52351
KNOB ASSY. REAR WING	3102 307 52361
LEAD ASSY.	3102 308 56101
NEOPRENE WASHER	7261-258-01
ANTENNA TRIMMER KNOB	7124-285-03
UPPER LID	7132-084-01
LOWER LID	7132-034-04

INDUCTORS

CIRCUIT REF. NO.	DESCRIPTION	PART NUMBER.
121	CHOKE - 6·8μF	4048-032-01
123	NO. 1 I.F. TRANSFORMER YELLOW/BLACK	3102 308 30281
124	NO. 2 I.F. TRANSFORMER YELLOW/GREEN	3102 308 30291
125	OSCILLATOR SHUNT COIL	4036-044-02
126	NO. 3 I.F. TRANSFORMER YELLOW/BLUE	3102 308 30301
127	NO. 4 I.F. TRANSFORMER YELLOW/VIOLET	3102 308 30311
129	CHOKE-IRON CORED	3102 108 21590
130	DRIVER TRANSFORMER	3102 108 33170
131	SPEAKER TRANSFORMER	3102 108 33190
132	CHOKE-SPEAKER FILTER	4048-043-02
133	SPEAKER-15Ω,7" x 5"	4056-012-15

RESISTORS

ALL RESISTORS ARE 10%, 0·5 WATT, CARBON COMPOSITION TYPE (VALUES MARKED ON THE CIRCUIT DIAGRAM) EXCEPT THOSE LISTED ON FOLLOWING CHART.

CIRCUIT REF. NO.	DESCRIPTION	VALUE Ω	TOL. %	RATING WATTS	PART NUMBER
96	POTENTIOMETER DUAL (VOLUME AND TONE) S/P PUSH/PUSH SWITCH WITH 20K TAP.	50K			4030-030-16
100	POTENTIOMETER PRESET	220			2322 410 03302
110	CARBON	100	10	1	2102 101 08101
112	WIRE WOUND	0·27	10	0·5	4024-007-02
113	WIRE WOUND	0·27	10	0·5	4024-007-02
114	CARBON	47	10	1	2102 101 08479

CIRCUIT REF. NO.	CODE NO.	VALUE	TOL. ± %	VDCW	PART NUMBER.
1	1	5-55pF			2002 802 00006
2	1	5-55pF			2002 802 00005
3	2	0·0047μF	10	50	2002 303 10472
4	2	82pF	10	100	2002 303 07829
5	3	4·7pF	0·5pF	630	2002 555 27478
6	4	4·7μF	+100-10	25	2020 003 47478
7	6	0·47μF	+50-20	35	4005-056-05
8	5	0·047μF	10	100	2002 351 01473
9	1	5-55pF			2002 802 00005
10	2	270pF	10	100	2002 303 07271
11	2	680pF	10	100	2002 303 07681
12	2	82pF	10	100	2020 303 14829
13	2	0·001μF	10	50	2002 303 10102
14	3	0·022μF	+80-20	63	2002 551 95223
15	3	0·022μF	+80-20	63	2002 551 95223
16	5	0·047μF	10	100	2002 351 01473
17	2	220pF	5	100	2002 303 04221
18	3	2·7pF	0·25pF	50	2020 550 88278
19	2	56pF	10	100	2002 303 07569
21	5	0·0068μF	10	160	2002 352 12682
22	2	220pF	5	100	2002 303 04221
23	5	0·047μF	10	100	2002 351 01473
24	1	5·5-65pF			2222 808 01001
25	5	0·047μF	10	100	2002 351 01473
26	5	0·047μF	10	100	2002 351 01473
27	5	0·047μF	10	100	2002 351 01473
28	2	220pF	5	100	2002 303 04221
29	4	4·7μF	+50-10	63	2222 015 18478
30	4	100μF	+100-10	16	2020 003 46101
32	5	0·047μF	10	100	2002 351 01473
34	5	0·047μF	10	100	2002 351 01473
35	5	0·047μF	10	100	2002 351 01473
36	2	220pF	5	100	2002 303 04221
37	5	0·0022μF	10	100	4009-002-20
38	5	0·0022μF	10	100	4009-002-20
39	3	0·001μF		500	2002 555 18102
40	3	220pF	20	630	2002 555 19221
41	5	0·1μF	10	100	2002 351 01104
43	5	0·047μF	10	100	2002 351 01473
44	7	0·001μF	+50-20		2002 700 90006
45	7	0·001μF	+50-20		2002 700 90006
46	5	0·22μF	10	250	2222 342 45224
47	5	0·22μF	10	100	4009-007-31
48	4	33μF	+50-10	16	2020 002 43339
51	4	4·7μF	+100-10	25	2020 003 47478
52	5	0·1μF	10	100	2002 351 01104
53	5	0·1μF	10	100	2002 351 01104
54	4	640μF	+50-10	16	2020 002 43641
55	3	0·047μF	+80-20	25	2020 551 90031
56	3	0·047μF	+80-20	25	2020 551 90031
58	3	0·47μF	+80-20	25	2002 557 01474
59	5	0·47μF	10	200	4009-003-29

CODE LEGEND:

1. TRIMMER
2. POLYSTYRENE
3. CERAMIC DISC
4. ELECTROLYTIC
5. POLYESTER
6. TANTALUM
7. CERAMIC FEED THRU