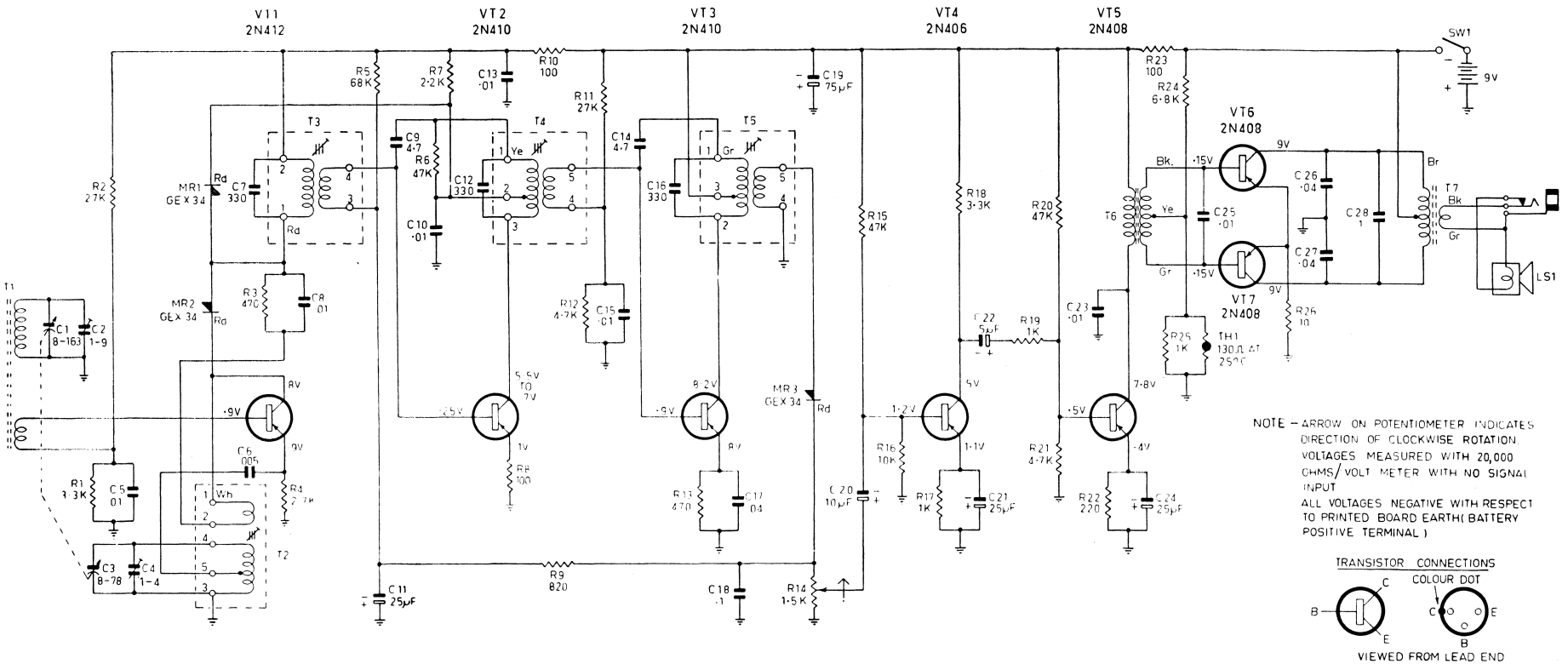

CIRCUIT DIAGRAM