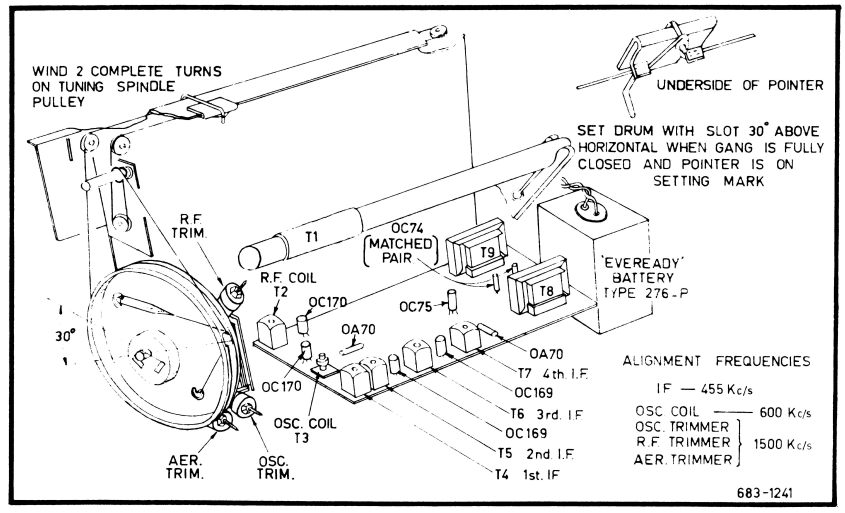

TRANSISTOR LOCATION AND DIAL CORD DIAGRAM

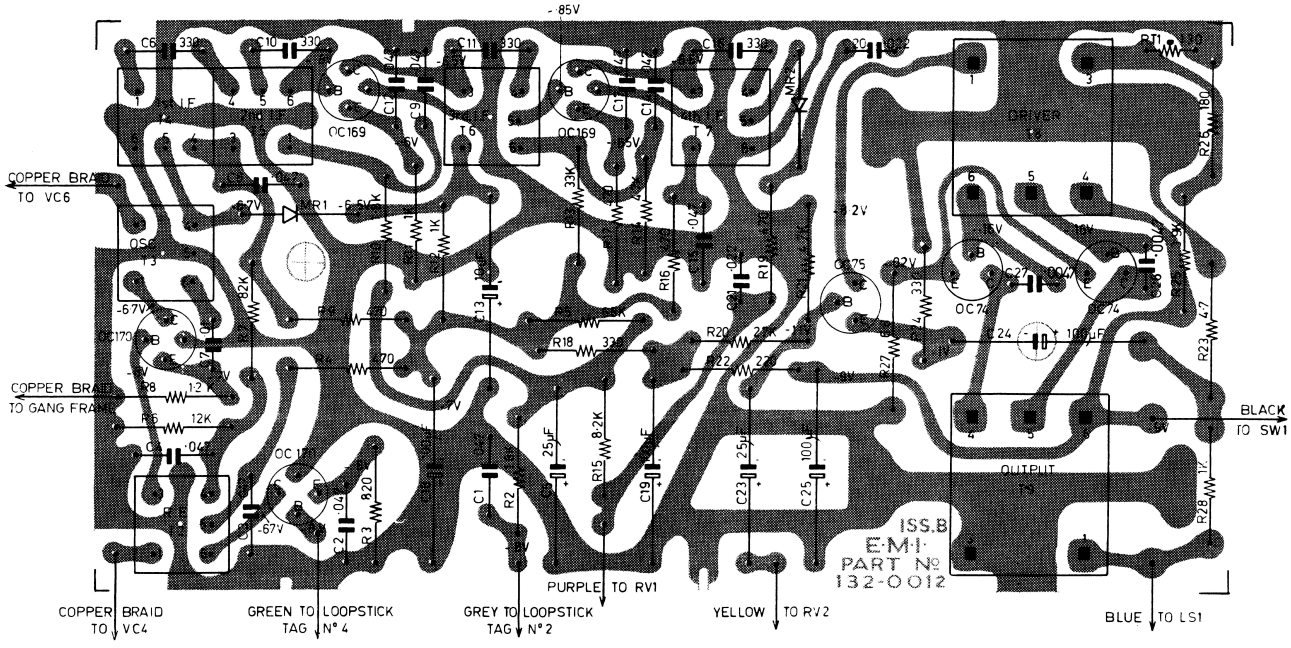

COMPONENT LAYOUT — J4