# S32-1 Sony ICR-100/BC-100

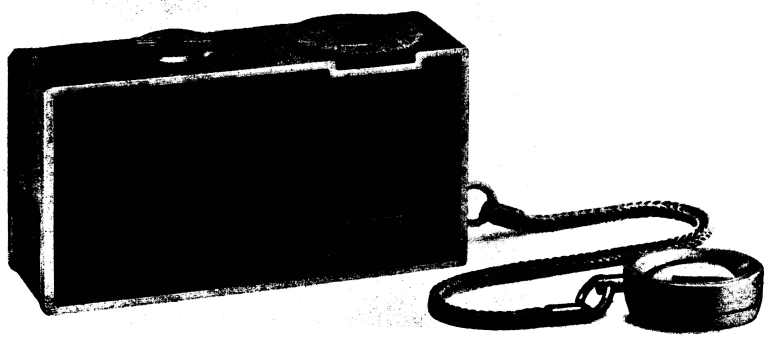

## Specifications

**(ICR-100)**

**Circuit:** 1 IC, 3 Transistor Superheterodyne
**Frequency Coverage:** 530~1,605 kc (566~187 m)
**Intermediate Frequency:** 455 kc
**Antenna System:** Built-in Ferrite Bar Antenna
**Maximum Sensitivity:** 560μV/m (at 10 mW output)
**Selectivity:** 20 dB at 10 kc off resonance, at 1,400 kc.
**Output Power:** 50 mW (undistorted)
70 mW (maximum)
**Current Drain:** 9 mA at zero signal, 40 mA at 50 mW output
**Power Source:** Nickel Cadmium Battery 2.5V in total.
Rechargeable by using SONY Charger BC-100 or House Current.
**Speaker:** 40×28 mm PM dynamic 8Ω
**Dimensions:** 1-7/32 (H)×2-9/32 (W)×23/32″ (D)
(31×58×18 mm)
**Weight:** 3.2 ozs. (90 gs.)

**(BC-100)**

**Input:** AC 100~125 V 50/60 c/s
**Output:** DC 5 mA Maximum
**Dimensions:** 2 (H)×3-11/16 (W)×1-1/8″ (D)
(50×94×28 mm)
**Weight:** 75 gs.

## Frequency Coverage and Tracking Adjustment

| Adj. Item | SSG (Standard) Signal Generator) Coupling | SSG Freq. | Receiver Dial Setting | Connect VTVM | Adjust | Remarks |
|---|---|---|---|---|---|---|
| Frequency Coverage | Loop Antenna | 520 Kc (1000 c/s 30% AM Mod) | Fully Left | Across 8Ω Load Resistor | OSC Coil ($L_2$) | Adjust for maximum deflection. Volume Control: MAX Power Supply: DC. 2.5V |
| | | 1,680 Kc ( 〃 ) | Fully Right | | OSC Trimmer ($C_{2-2}$) | |
| Tracking | —ditto— | 620 Kc ( 〃 ) | Tune to 620Kc signal | —ditto— | ANT Coil ($L_1$) | —ditto— |
| | | 1,400 Kc ( 〃 ) | Tune to 1,400Kc signal | | ANT Trimmer ($C_{2-1}$) | |

## Removal of Neon Lamp and Resistors (BC-100)

(1) Remove the Cover marked with △ shown in Fig. 3.
(2) Unsolder the Neon Lamp, Diode and Resistors.

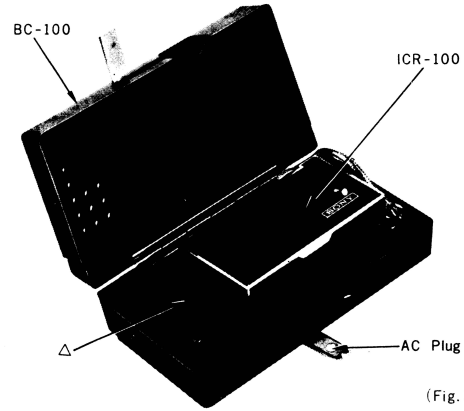


(Fig. 3)

## BC-100 Circuit Schematic

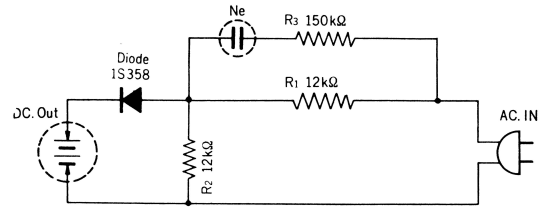


## ICR-100 Block Diagram

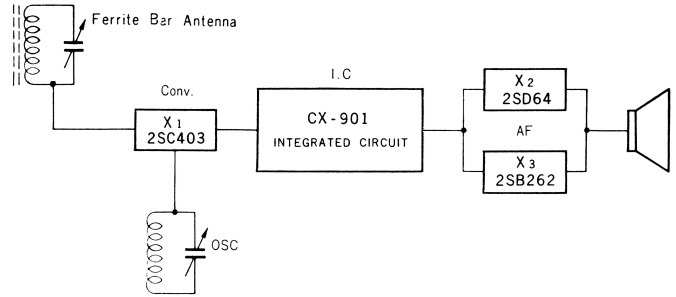

## Mounting Diagram

— Printed Side —

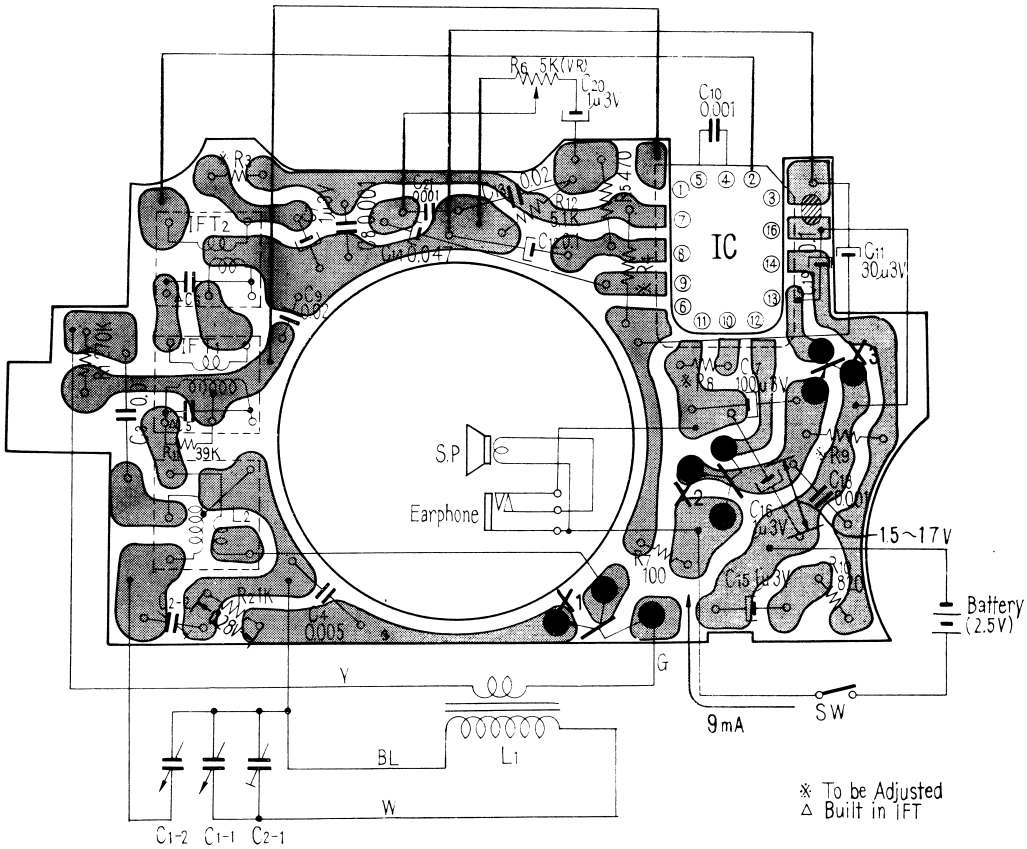


— Parts Side —

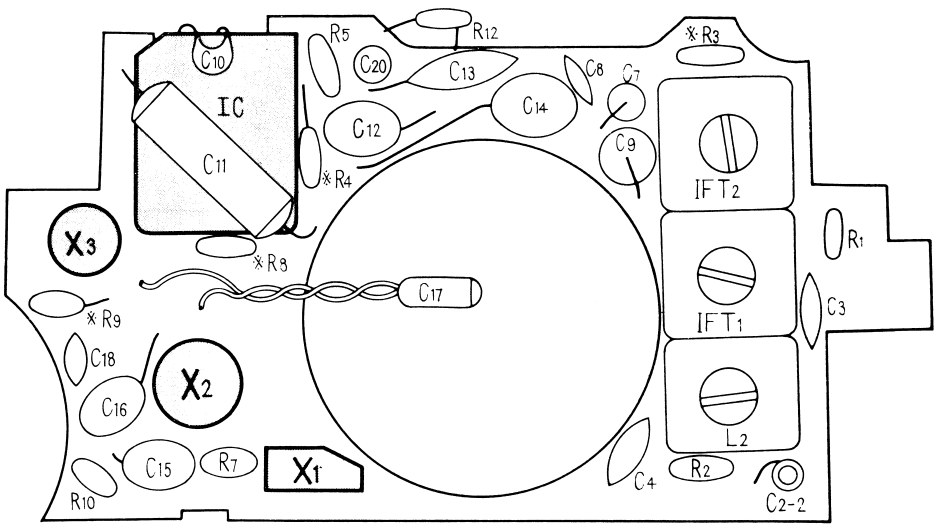


R11, C19 Mounted on the Printed side

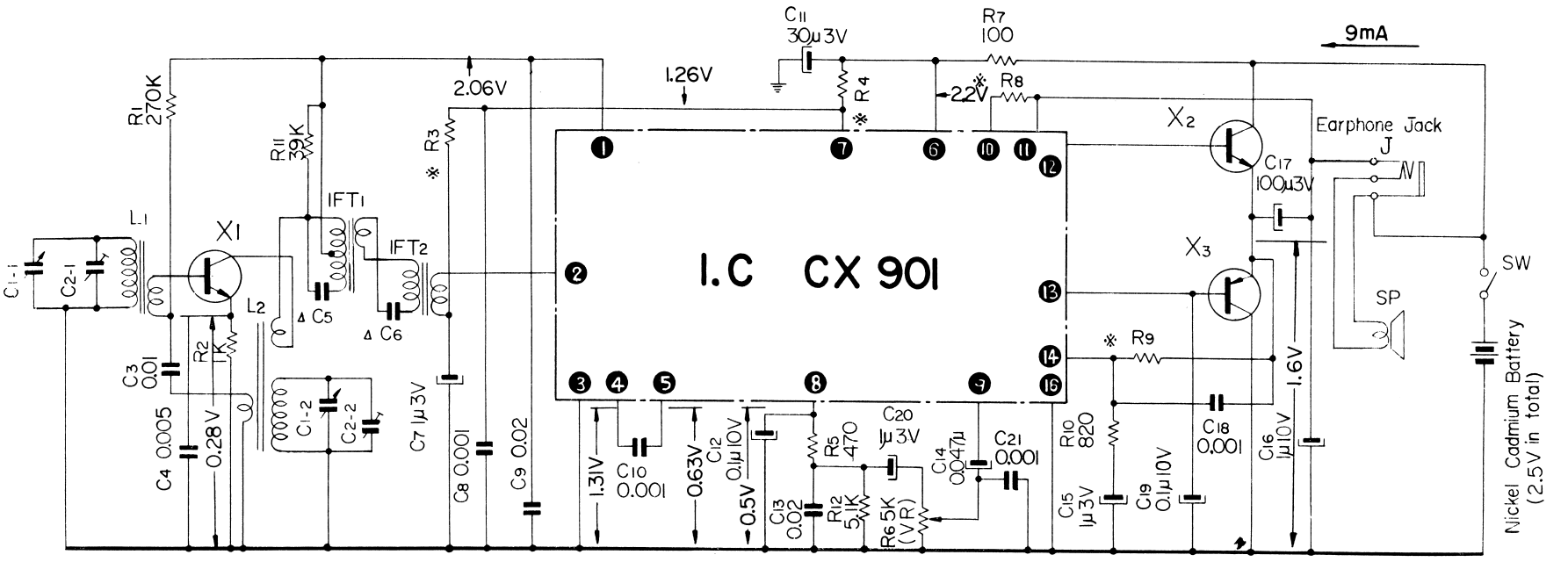


X1 2SC403 ※ To be Adjusted

△ Built in IFT

X2 2SD64 X3 2SB262

## Color Code of IC

| IC Mark | Resistor No. | Brown | Red | Orange | Yellow | Green | Blue | Purple | Gray | White | Black | Gold | Silver |
|---|---|---|---|---|---|---|---|---|---|---|---|---|---|
| ① | $R_4$ (kΩ) | 6.2 | 6.8 | 7.5 | 8.2 | 9.1 | 10 | 11 | 12 | 13 | 15 | | |
| ② | $R_8$ (kΩ) | 4.7 | 5.6 | 6.8 | 8.2 | 10 | 12 | 15 | 18 | 22 | 27 | 33 | 39 |
| ③ | $R_9$ (kΩ) | 91 | 100 | 110 | 120 | 130 | 150 | 160 | 180 | 200 | 220 | 240 | 270 |

IC
-Pin Side-

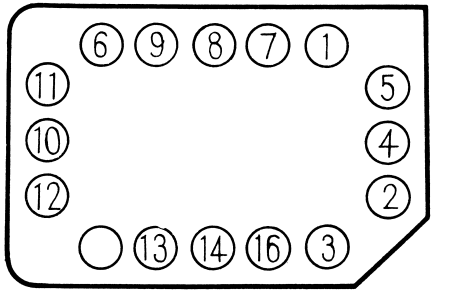


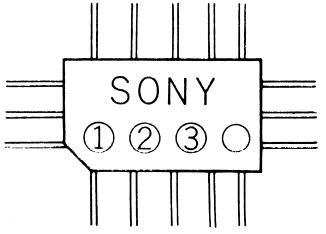


As for $R_4$, $R_8$ and $R_9$ of Adjustable Resistors, select the ones with the following values according to the respective color codes on the IC.