TOSHIBA TRANSISTOR RADIO
SERVICE DATA
MODEL IC-700

FILE NO. 060

SPECIFICATIONS

TUNING RANGE:		MW 530-1600kHz
		SW 3.8-12MHz
		FM 87.5-108MHz
INTERMEDIATE FREQUENCY:		MW,SW 455kHz
		FM 10.7MHz
POWER SOURCE:		AC 115/230V 50 or 60Hz
		DC 6V UM-3 ("AA")×4
POWER OUTPUT:		500mW (Max.)
SPEAKER:		77m/m PMD 8 ohms
ANTENNA:		MW Ferrite-rod Antenna
		FM,SW Telescopic Antenna
TRANSISTORS & DIODES:		
TR1	2SK19	FM RF Amplifier
TR2	2SC784	FM Mixer
TR3	2SC785	FM Oscillator
TR4	2SC380	AM Mixer
TR5	2SC380	AM Oscillator
TR6	2SC372	AF Amplifier
TR7,8	2SC364	Power Amplifier
IC1	TA7046P	Integrated Circuits
D1,11	1S73	FM Limiter
D2	1S86	AFC
D3,4	1N60	AM Limiter
D5,6	1N60	FM Ratio Detector
D7,8,9,10	1S1941	Rectifier
DIMENSIONS:		190(W)×110(H)×57(D) m/m
WEIGHT:		1Kg

DIAL CORD STRINGING

1. Set the tuning capacitor to the minimum capacitance (Fully clokwise).
2. Wind the dial cord in the numerical sequence indicated in figure 3.

FIGURE 3

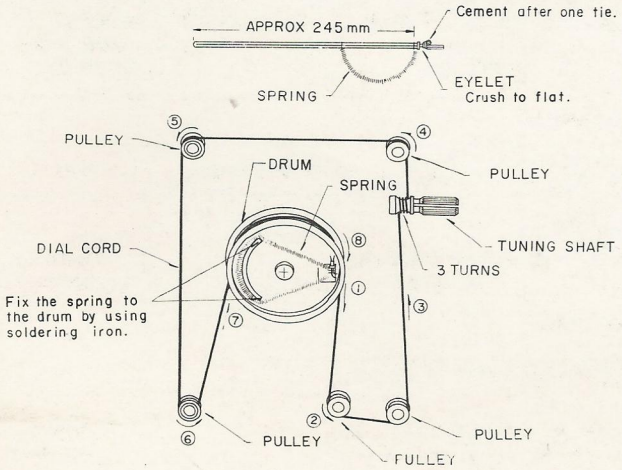

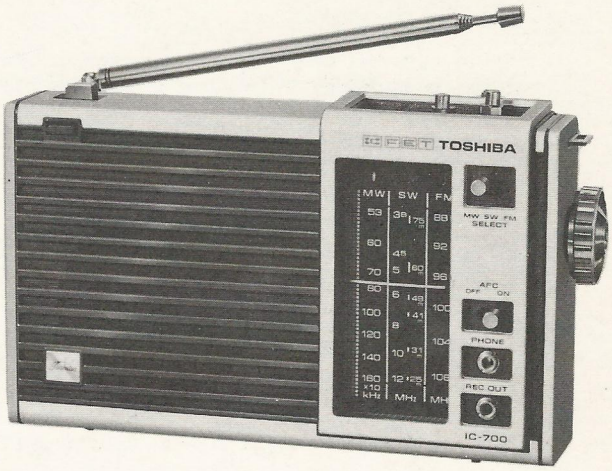

CAHSSIS REMOVAL

1. Remove the VOLUME, TONE and tuning knobs.
2. Remove two screws marked (★) shown in figure 1, and open the cabinet back.
3. Remove five screws and three studs marked (※) in figure 2, and remove the chassis from the cabinet.

FIGURE 1

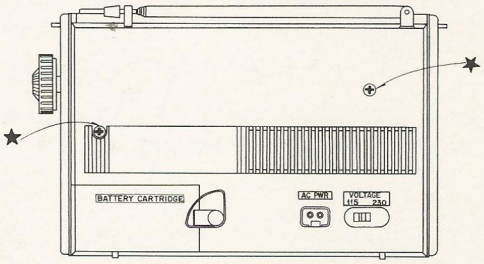

FIGURE 2

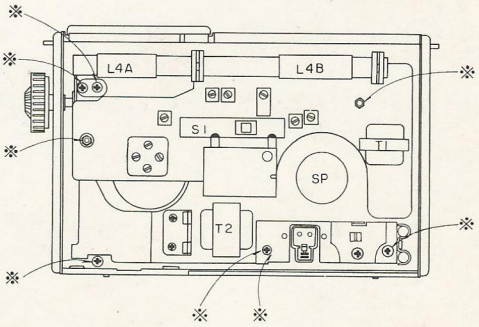

TOKYO SHIBAURA ELECTRIC CO., LTD.

2-1, 5-CHOME, GINZA, CHUO-KU, TOKYO, JAPAN

ALIGNMENT PROCEDURE

The following equipments are required for alignment:

1. AM signal generator.
2. FM signal generator.
3. Vacuum tube volt meter.
4. Sweep signal generator (10.7MHz ±300KHz) with 10.7MHz marker signal (Ext. marker may be used).
5. Oscilloscope.
6. Test loop, a coil of any size wire, one turn or more.

NOTES:

During alignment keep the signal generator outputs at the lowest level that will maintain a useable output from the set.
Generator modulation (FM) (Other than IF alignment) ····· 30%, 400Hz
Generator modulation (AM) ····· 30%, 400Hz
Ground connection of signal generator ····· chassis ground

MW ALIGNMENT

Step	Generator Connection	Generator Frequency	Band	Position of Tuning Gang	Meter Connection	Adjustment	Remarks
1	Test Loop	455kHz	MW	Fully clockwise.	Across voice coil of speaker.	IT2, IT3	Adjust for maximum.
2		520kHz		Fully counterclockwise		L5	Same as step 1.
3		1650kHz		Fully clockwise.		C4	Same as step 1.
4	Repeat Step 2 and 3 until maximum is attained on both ends.						
5	Test Loop	600kHz	MW	Turn tuner for maximum signal.	Across voice coil of speaker.	L4A	Same as step 1.
6		1400kHz				C3	Same as step 1.
7	Repeat Step 5 and 6 until maximum is attained on both ends.						

SW ALIGNMENT

Step	Generator Connection	Generator Frequency	Band	Position of Tuning Gang	Meter Connection	Adjustment	Remarks
1	Test Loop	3.7MHz	SW	Fully counterclockwise	Across voice coil of speaker.	L6	Adjust for maximum.
2		12.5MHz		Fully clockwise.		C2d	
3	Repeat Step 1 and 2 until maximu is attained on both ends.						
4	Test Loop	4MHz	SW	Turn tuner for maximum signal.	Across voice coil of speaker.	L4B	Adjust for maximum.
5		11MHz				C2C	
6	Repeat Step 4 and 5 until maximum is attained on both ends.						

FM IF ALIGNMENT

Generator Connection	Generator Frequency	Band	Position of Tuning Gang	Oscilloscope Connection	Adjustment	Remarks
Connect Sweep Generator through 33Kohm. 10PF TO TP-3 Figure. 4, 5 and schematic diagram.	10.7MHz Center Freq. with 10.7MHz Marker.	FM	Fully clockwise.	Connect to TP-4 Figure. 4, 5 and schematic diagram.	IT1, IT4, IT5	Adjust for ratio detector "S" Curve as shown figure 4.

FM RF ALIGNMENT

Step	Generator Connection	Generator Frequency	Band	Position of Tuning Gang	Meter Connection	Adjustment	Remarks
1	FM Generator to TP-1 directly	87MHz	FM	Fully counterclockwise	Across voice coil of speaker.	L3	Adjust for maximum.
2	Same as step 1.	109MHz		Fully clockwise.		C2b	
3	Repeat Step 1 and 2 until maximum is attained on both ends.						
4	Same as step 1.	90MHz	FM	Turn tuner for maximum signal.	Across voice coil of speaker.	L2	Adjust for maximum.
5		106MHz				C2a	
6	Repeat Step 4 and 5 until maximum is attained on both ends.						

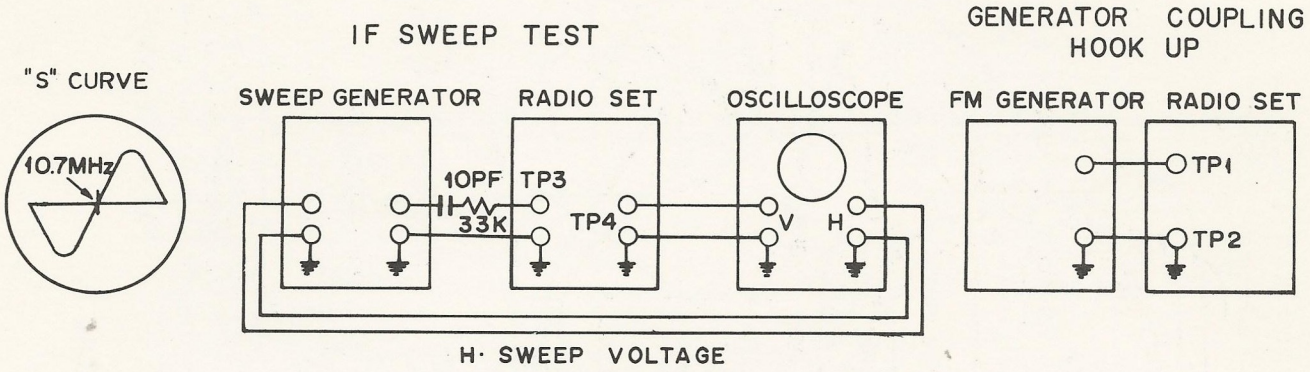

FIGURE 4. FM IF AND RF TEST SET-UP

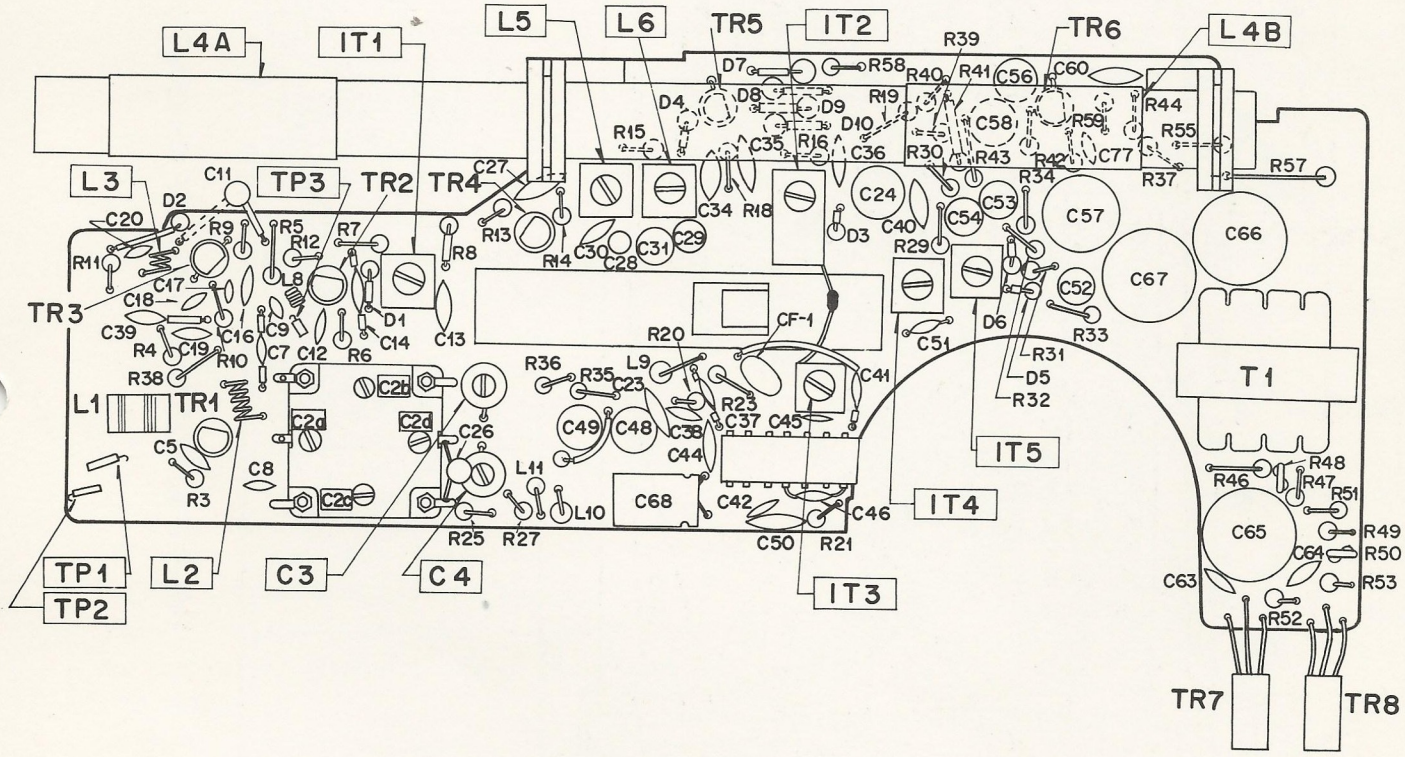

FIGURE 5. TOP VIEW OF CHASSIS

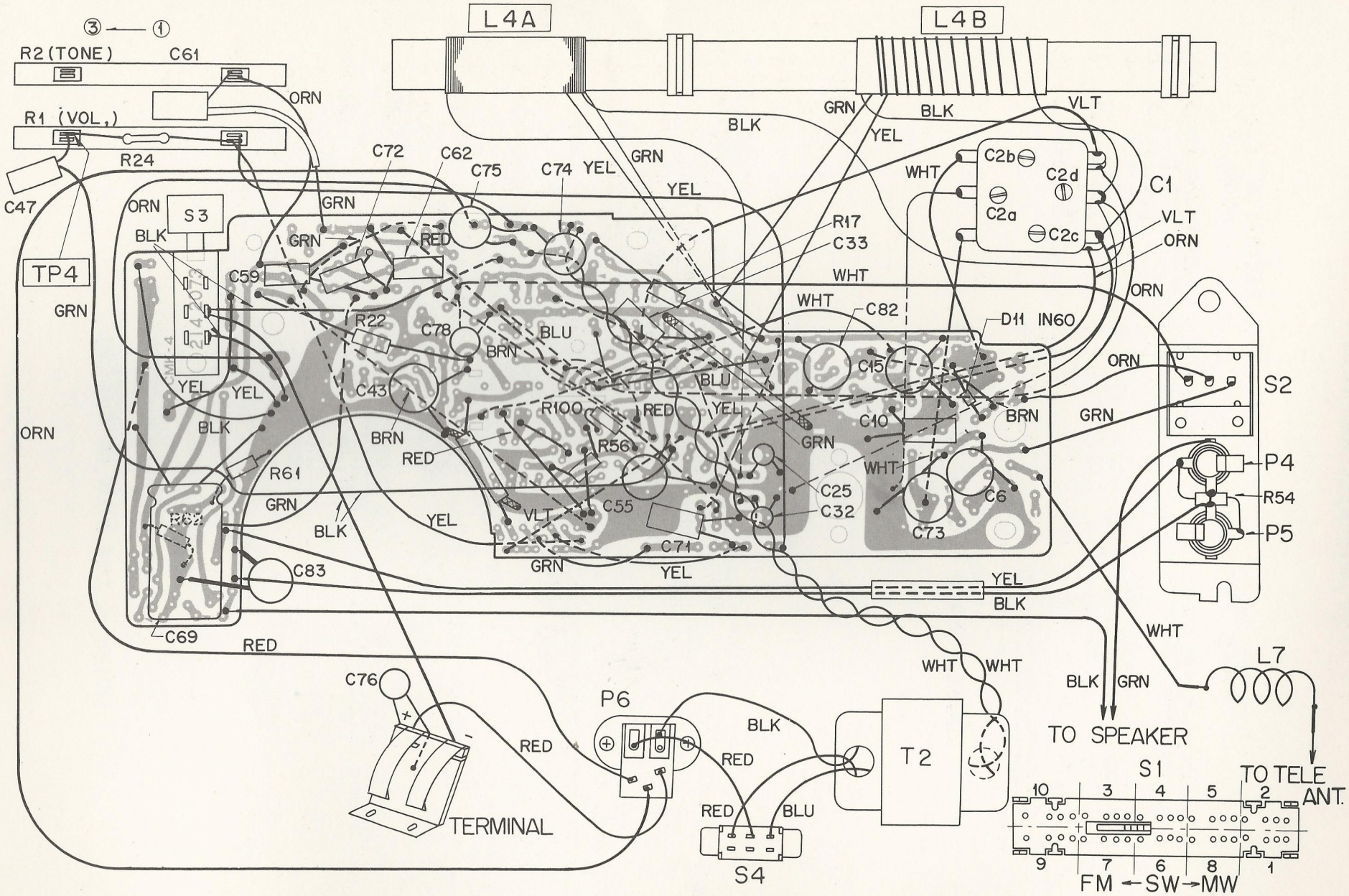

FIGURE 6. BOTTOM VIEW OF CHASSIS AND WIRING CONNECTION

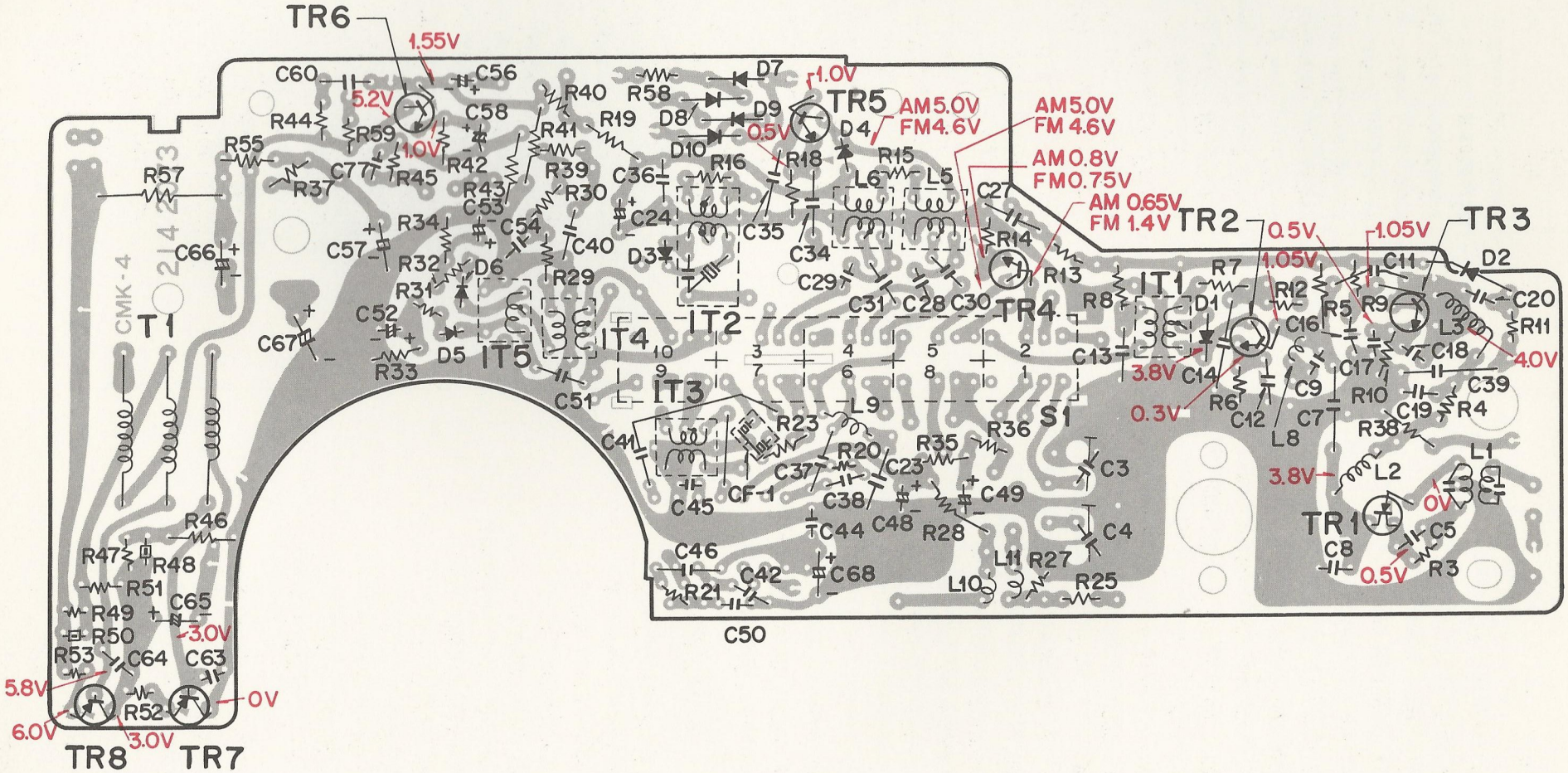

FIGURE 7. BOTTOM VIEW OF CHASSIS WIRING AND VOLTAGE VALUES

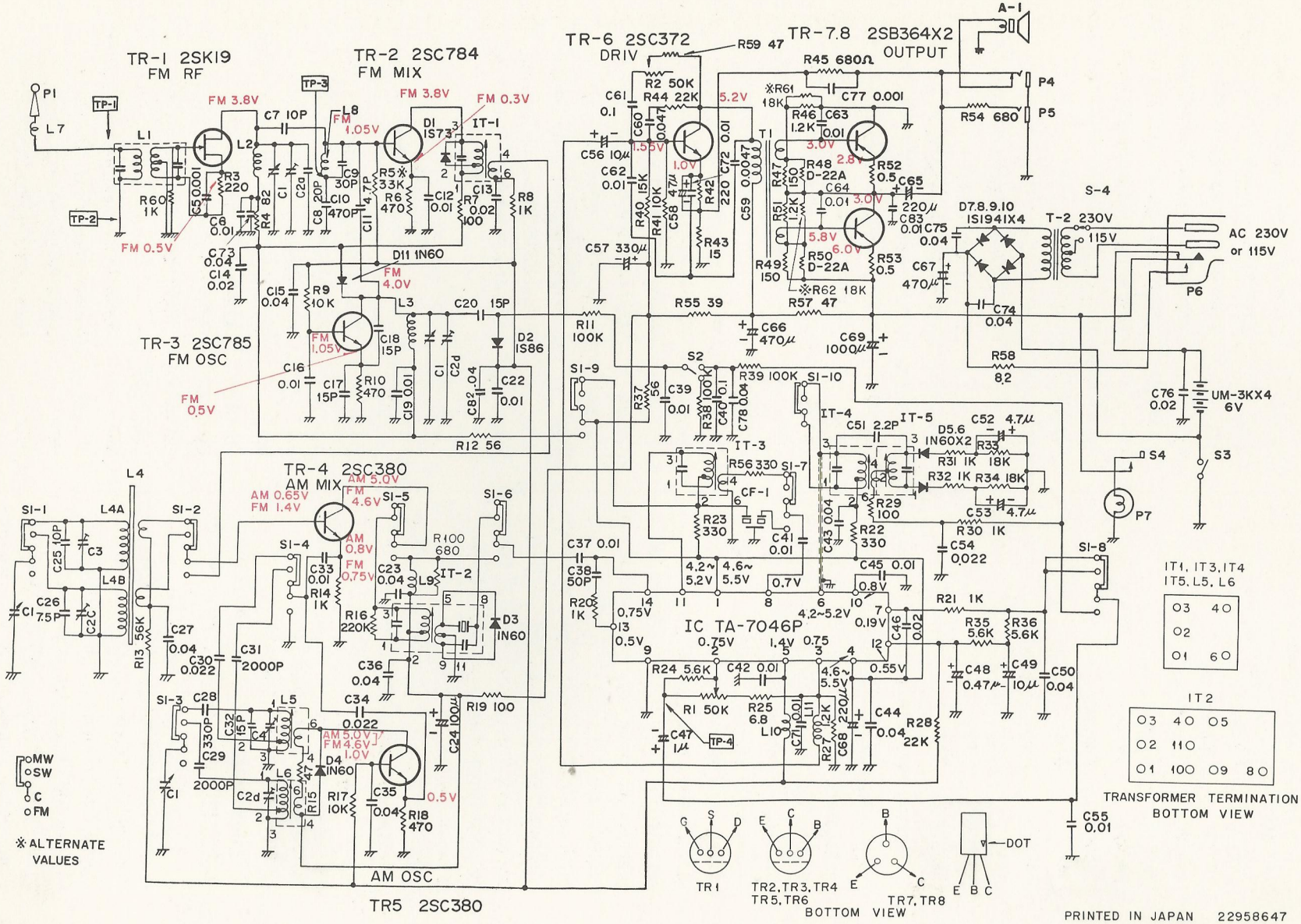

FIGURE 8. SCHEMATIC DIAGRAM

SYMBOL NO.	CODE NO.	DESCRIPTION	
TRANSISTORS & DIODES			
IC 1	TA7046P	IC	
TR 1	2SK19	Transistor	
TR 2	2SC784	Transistor	
TR 3	2SC785	Transistor	
TR 4,5	2SC380	Transistor	
TR 6	2SC372	Transistor	
TR 7,8	2SB364	Transistor	
D 1	1S73	Diode	
D 2	1S86	Diode	
D 3,4,11	1N60	Diode	
D 5,6	1N60 Pair	Diode	
D 7,8,9,10	1S1941	Diode	
COILS & TRANSFORMERS			
L 1	2229421200	Antenna Coil, FM	
L 2	2229401900	RF Coil, FM	LH-8404L
L 3	2229400700	Oscillator Coil, FM	LH-8406R
L 4	2224232600	Antenna Coil Ass'y	LH-599
L 5	2224516900	Oscillator Coil, MW	LH-7275
L 6	2228514500	Oscillator Coil, SW	LH-7276
L 7	2229404800	Choke Coil, FM	LH-8019
L 8	2229100100	Choke Coil, FM	LH-241
L 9,10,11	2229101201	Choke Coil, FM	LH-9043A
IT 1	2226554700	IF Transformer A, FM	
IT 2	2226460000	IF Transformer, AM	IT-07453
IT 3	2226455000	IF Transformer, AM	IT-07441
IT 4	2226729400	IF Transformer, FM	IT-07454
IT 5	2226724000	IF Transformer, FM	IT-07332
CF 1	2215301000	Ceramic Filter	CF-07
T 1	2221409200	Input Transformer	DT-12405
T 2	2221377300	Power Transformer	PT-2011
CAPACITORS			
C1	2230811300	Variable Capacitor	
C3,4	2230907100	Trimmer Capacitor	
C5	2234310200	Ceramic .001 MF ±20%	
C6,12,16,19 22,39,45,83	2234110300	Ceramic .01 MF +100,−0%	
C7,25	2236210000	Ceramic 10 PF ±10%	
C8	2236220000	Ceramic 20 PF ±10%	
C9	2236230000	Ceramic 30 PF ±10%	
C10	2239247100	Polyethylene 470 PF ±10%	
C11	2236147900	Ceramic 4.7 PF ±0.5PF	
C13,14,46	2234120300	Ceramic .02 MF +100,−0%	
C15,23,27,35 36,43,44,50 73,74,75,78 82	2234240300	Ceramic .04 MF +80,−20%	

SYMBOL NO.	CODE NO.	DESCRIPTION
C17,18,20,32	2236215000	Ceramic 15 PF ±10%
C24	2244210103	Electrolytic 100MF 6V
C26	2236175900	Ceramic 7.5 PF ±.5PF
C28	2239133101	Polyethylene 330 PF ±5%
C29	2239120201	Polyethylene 2000 PF ±5%
C30,34,54	2237322300	Mylar .022 MF ±20%
C31	2239220200	Polyethylene 2000 PF ±10%
C33,37,41,42 55,62,63,64 71,72	2237310300	Mylay .01 MF ±20%
C38	2236250000	Ceramic 50 PF ±10%
C40	2234000200	Ceramic .1 MF ±80, −0%
C47	2244810903	Electrolytic 1 MF 50V
C48	2244847803	Electrolytic .47 MF 50V
C49,56	2244310003	Electrolytic 10 MF 10V
C51	2236122900	Ceramic 2.2 PF ±5PF
C52,53	2244647903	Electrolytic 4.7 MF 25V
C57	2244233103	Electrolytic 330MF 6V
C58	2244147003	Electrolytic 47MF 3V
C59	2237347200	Mylar .0047 MF ±20%
C60	2237347300	Mylar .047 MF ±20%
C61	2237310400	Mylar .1 MF ±20%
C65,68	2244222103	Electrolytic 220 MF 6V
C66,67	2244347103	Electrolytic 470 MF 10V
C69	2244310203	Electrolytic 1000 MF 10V
C76	2234220300	Ceramic .02 MF +80, −20%
C77	2237310200	Mylar .001 MF ±20%
RESISTORS Fixed carbon film resistor 1/8w unless otherwise noted.		
R1,2	2265700200	Slide Variable Resistor 50K ohm
R3	2255422100	220 ohm ±10%
R4	2255482000	82 ohm ±10%
R5	2256133300	33K ohm ±10% Composition ¼W
R6,10,18	2255447100	470 ohm ±10%
R7,19,29	2255410100	100 ohm ±10%
R8,14,20,21 30,31,32	2255410200	1K ohm ±10%
R9	2256110300	10K ohm ±10% Composition ¼W
R11,38	2255410400	100K ohm ±10%
R12	2255456000	56 ohm ±10%
R13	2255456300	56K ohm ±10%
R15,57	2255447000	47 ohm ±10%
R16	2255422400	220K ohm ±10%
R17,41	2256110300	10K ohm ±10% Composition ¼W

PARTS LIST

SYMBOL NO.	CODE NO.	DESCRIPTION
R22,56	2256133100	330 ohm ±10% Composition $\frac{1}{4}$W
R24	2256156200	5.6K ohm ±10% Composition $\frac{1}{4}$W
R25	2255468900	6.8 ohm ±10%
R27,46,51	2255412200	1.2K ohm ±10%
R28	2255422300	22K ohm ±10%
R33,34	2255418300	18K ohm ±10%
R35,36	2255456200	5.6K ohm ±10%
R37	2256156000	56 ohm ±10% Composition $\frac{1}{4}$W
R39	2256110400	100K ohm ±10% Composition $\frac{1}{4}$W
R40	2256115300	15K ohm ±10% Composition $\frac{1}{4}$W
R42	2256122100	220 ohm ±10% Composition $\frac{1}{4}$W
R43	2256115000	15 ohm ±10% Composition $\frac{1}{4}$W
R44	2256122300	22K ohm ±10% Composition $\frac{1}{4}$W
R45,54 ,100	2256168100	680 ohm ±10% Composition $\frac{1}{4}$W
R47,49	2255415100	150 ohm ±10%
R48,50	2269100100	Thermistor, D22A
R52,53	2255450800	0.5 ohm ±10%
R55	2256139000	39 ohm ±10% Composition $\frac{1}{4}$W
R58	2256182900	8.2 ohm ±10% Composition $\frac{1}{4}$W
R59	2256147000	47 ohm ±10% Composition $\frac{1}{4}$W
R60	2256110200	1K ohm ±10% Composition $\frac{1}{4}$W
R61,62	2256118300	18K ohm ±10% Composition $\frac{1}{4}$W
R23	2255433100	330 ohm ±10%
MISCELLANEOUS		
S1	2214553900	Slide Switch
S2	2214554000	Slide Switch
S3	2214554100	Push Switch
S4	2214595500	Slide Switch
	2215109700	Speaker
	2212421300	Telescopic Antenna
	2216308400	Earphone Jack
	2216602500	Connector
	2211315900	Pilot Lamp
	2217635500	Power Cord, BS
	2217635600	Power Cord, CP
	2217616900	Power Cord, EP
MECHANICAL PARTS		
	2272421500	Stud C L = $1\frac{5}{16}$"
	2272421600	Stud D L = $1\frac{3}{16}$"
	2272421700	Stud E L = $\frac{7}{16}$"
	2272421801	Stud F L = $\frac{15}{16}$"
	2276203000	Clamp, Speaker
	2275630700	Guide, Switch
	2283001700	Board, Jack

SYMBOL NO.	CODE NO.	DESCRIPTION
	2277204100	Contact A
	2272506300	Contact B
	2285406800	Rubber Sheet
	2283456500	Cap A , Switch
	2271901400	Bracket, Jack, Assembly
	2283001800	Ring , Lever A
	2284518200	Plate, Paint
	2273671900	Lever A
	2273215900	Pointer Assembly
	2271408200	Tuning Shaft Assembly
	2284726900	Plate, Dial
	2272421401	Stud A L = $\frac{1}{4}$"
	2274417600	Holder, Antenna
	2274417700	Holder, Antenna B
	2273508800	Spacer A , PCB
	2273509000	Spacer C , PCB
	2274205000	Drum
	2277129100	Spring , Drum
	2273672800	Bracket Assembly
	2273672000	Lever B Assembly
	2273672200	Lever C
	2275601901	Slide Plate
	2274305300	Steel Ball
	2216106100	Lug
	2274953200	Dial Cord Assembly
	2275627300	Cushion , Chassis
	2275100800	Rubber, Antenna
	2274804100	Shield Board
CABINET PARTS		
	2282161400	Cabinet Upper Assembly
	2282251800	Cabinet Lower Assembly
	2287502400	Antenna Clamp
	2285405400	Panelon Sheet A
	2285405600	Net, Speaker
	2286364200	Name Plate B
	2283225800	Battery Case Assembly
	2283456200	Knob, Tuning
	2283457501	Knob Assembly , Volume, Tone
	2283456400	Push Button
	2273672400	Bracket'Antenna
	2272116100	Shaft Knob
	2271900801	Frame Assembly
	2297203000	Earphone Case
	2273625800	Radiator
	2273411601	Shield Plate A
ACCESSORY		
	2215202401	Earphone

2955625
Printed in Japan
Apr. 1971