SOURCE
PWR
BAND
RETURN
RET
MENU
FACE
S A
DIMMER
DISP
DIM
SET
1
2
3
4
5
6
RANDOM
SCAN
REPEAT
VOL
7
8
9
#
0
MUTE
NUMBER
Panasonic
Car Audio

OPEN
Panasonic
VOL
MOSFET 60Wx4
MP3/WMA
CD
TRC
01
TIME
0'20
12:38
DISC : THE BEST
PAUSE
<<
TRACK
>>
SIRIUS
READY
MENU
MUTE

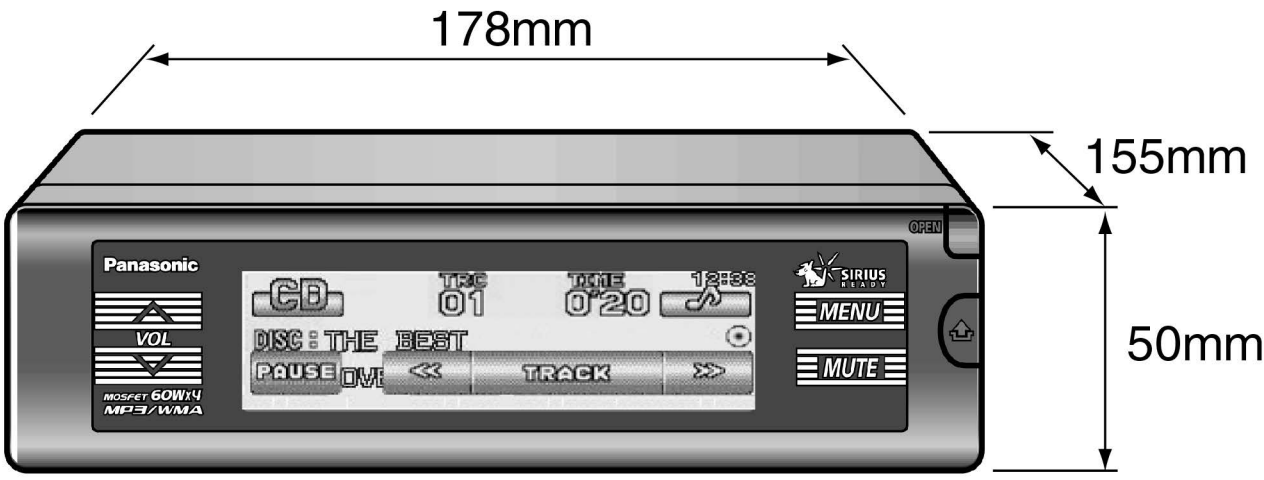
178mm
155mm
50mm
OPEN
Panasonic
VOL
MOSFET 60Wx4
MP3/WMA
CD
TRC
01
TIME
0'20
12:38
DISC : THE BEST
PAUSE
TRACK
SIRIUS
READY
MENU
MUTE

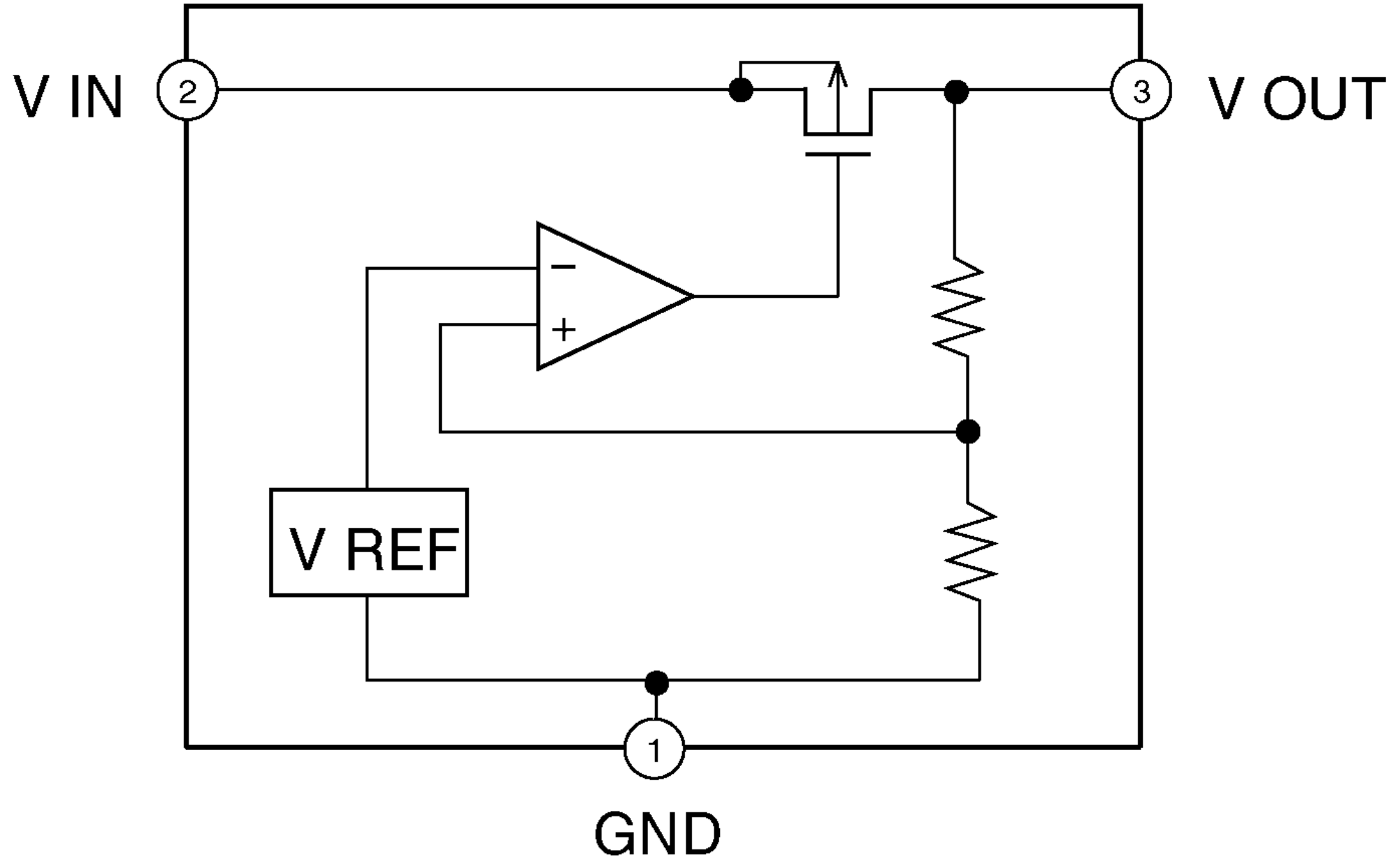
V IN
2
3
V OUT
−
+
V REF
1
GND

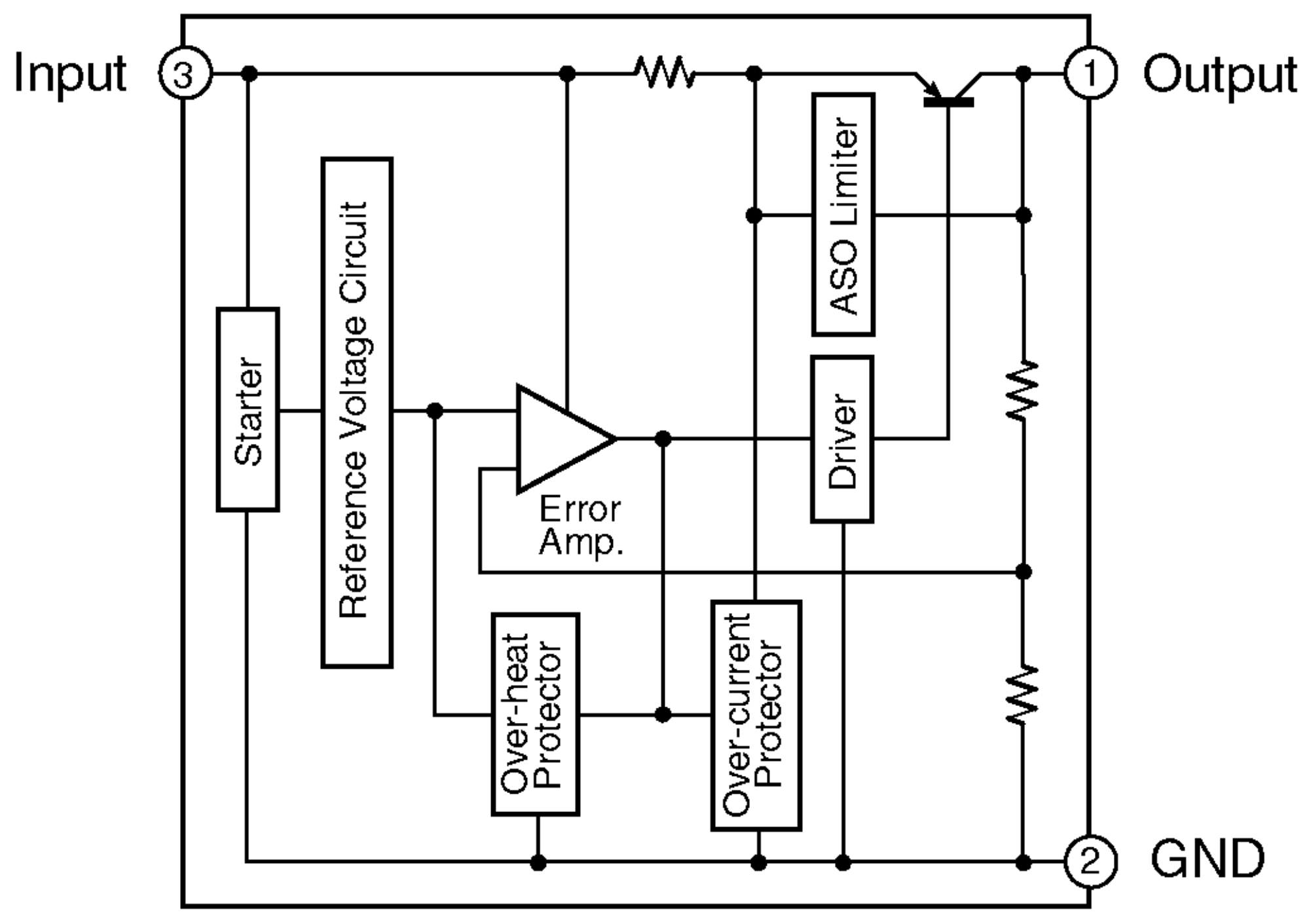
Input
3
1
Output
Starter
Reference Voltage Circuit
Error
Amp.
ASO Limiter
Driver
Over-heat
Protector
Over-current
Protector
2
GND

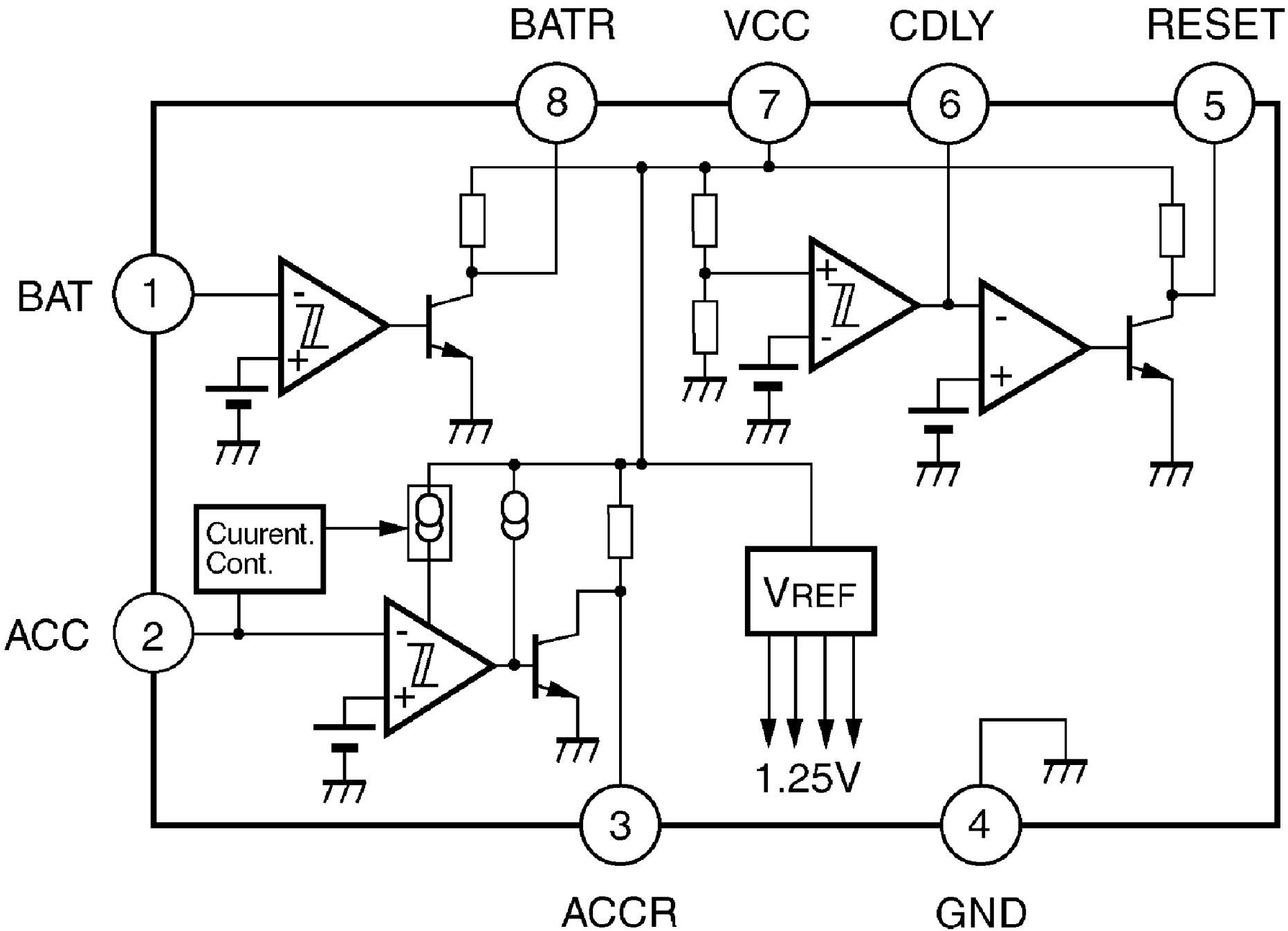
BATR
VCC
CDLY
RESET
8
7
6
5
BAT
1
Cuurent.
Cont.
VREF
ACC
2
1.25V
3
4
ACCR
GND

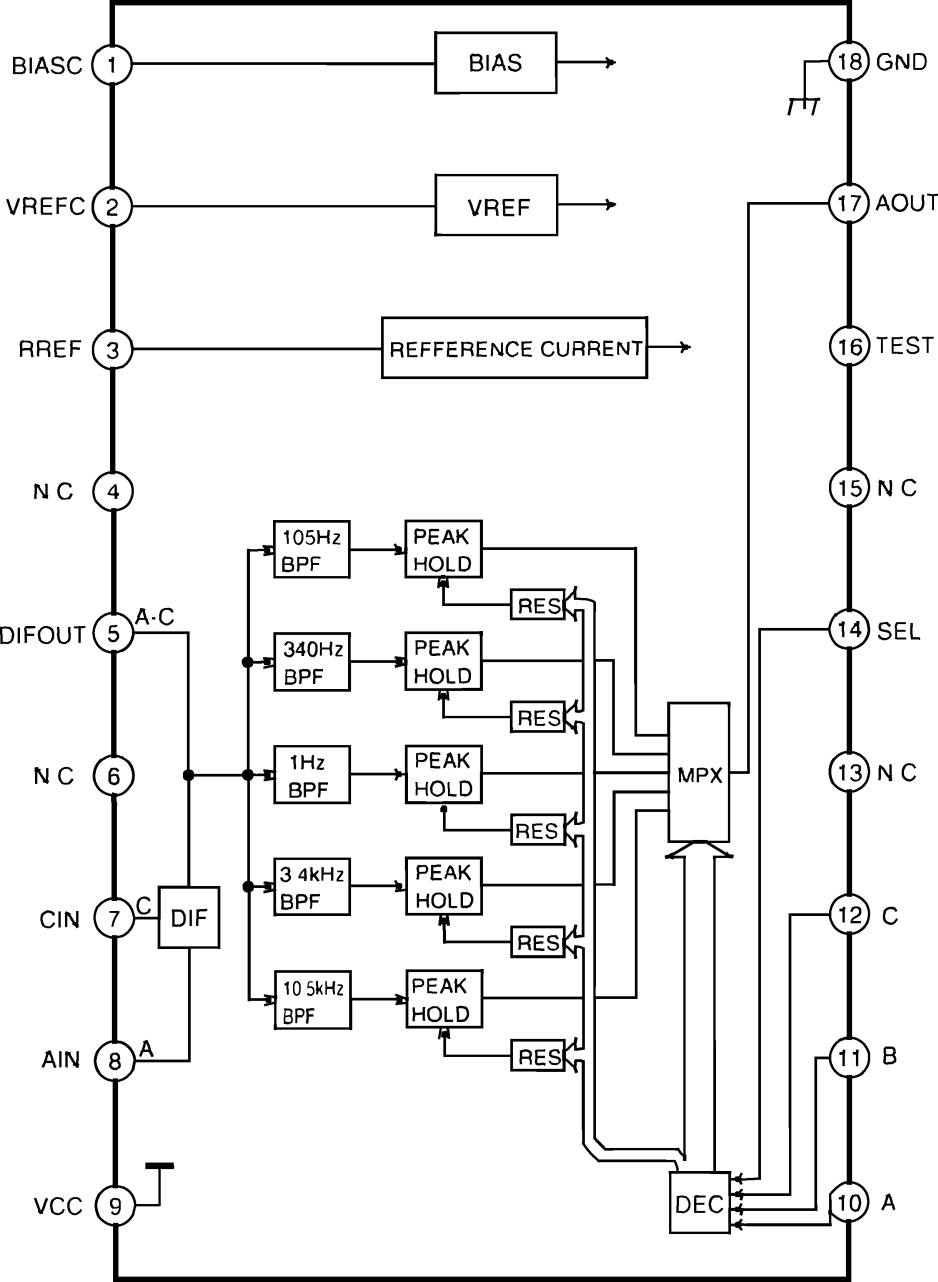
BIASC
1
BIAS
18
GND
VREFC
2
VREF
17
AOUT
RREF
3
REFFERENCE CURRENT
16
TEST
N C
4
15
N C
DIFOUT
5
A-C
14
SEL
N C
6
13
N C
CIN
7
C
DIF
12
C
AIN
8
A
11
B
VCC
9
10
A
105Hz BPF
340Hz BPF
1Hz BPF
3 4kHz BPF
10 5kHz BPF
PEAK HOLD
RES
MPX
DEC

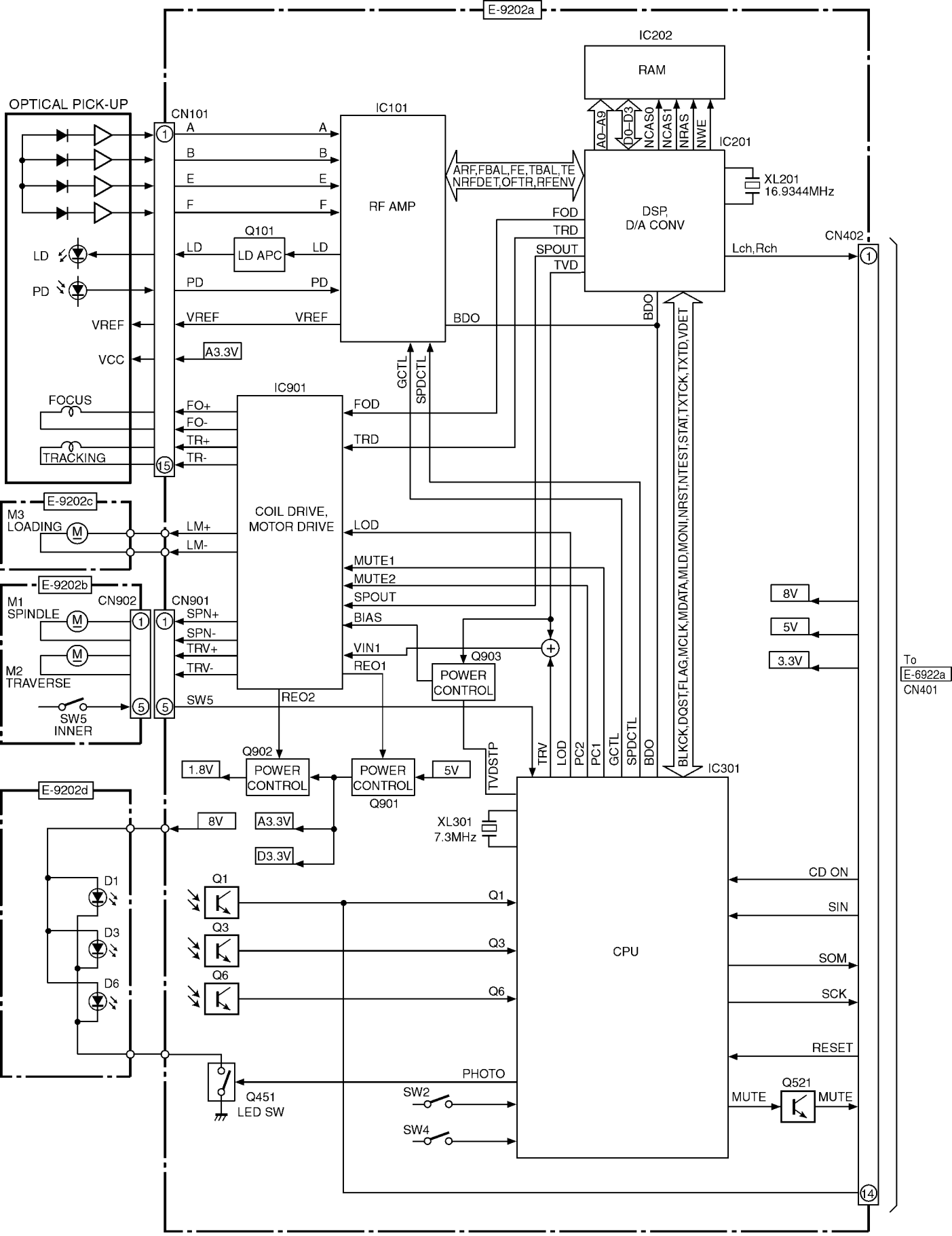
E-9202a
OPTICAL PICK-UP
CN101
IC101
RF AMP
IC202
RAM
A0–A9
D0–D3
NCAS0
NCAS1
NRAS
NWE
IC201
DSP,
D/A CONV
XL201
16.9344MHz
ARF,FBAL,FE,TBAL,TE
NRFDET,OFTR,RFENV
FOD
TRD
SPOUT
TVD
Lch,Rch
CN402
LD
PD
VREF
VCC
Q101
LD APC
A3.3V
BDO
GCTL
SPDCTL
FOCUS
TRACKING
IC901
FO+
FO-
TR+
TR-
COIL DRIVE,
MOTOR DRIVE
E-9202c
M3
LOADING
LM+
LM-
LOD
MUTE1
MUTE2
SPOUT
BIAS
VIN1
REO1
REO2
E-9202b
M1
SPINDLE
M2
TRAVERSE
SW5
INNER
CN902
CN901
SPN+
SPN-
TRV+
TRV-
SW5
Q903
POWER
CONTROL
Q902
1.8V
POWER
CONTROL
Q901
5V
TVDSTP
TRV
LOD
PC2
PC1
GCTL
SPDCTL
BDO
BLKCK,DQST,FLAG,MCLK,MDATA,MLD,MONI,NRST,NTEST,STAT,TXTCK,TXTD,VDET
IC301
8V
5V
3.3V
To
E-6922a
CN401
E-9202d
8V
A3.3V
D3.3V
XL301
7.3MHz
D1
D3
D6
Q1
Q3
Q6
CPU
CD ON
SIN
SOM
SCK
RESET
PHOTO
Q451
LED SW
SW2
SW4
MUTE
Q521
MUTE

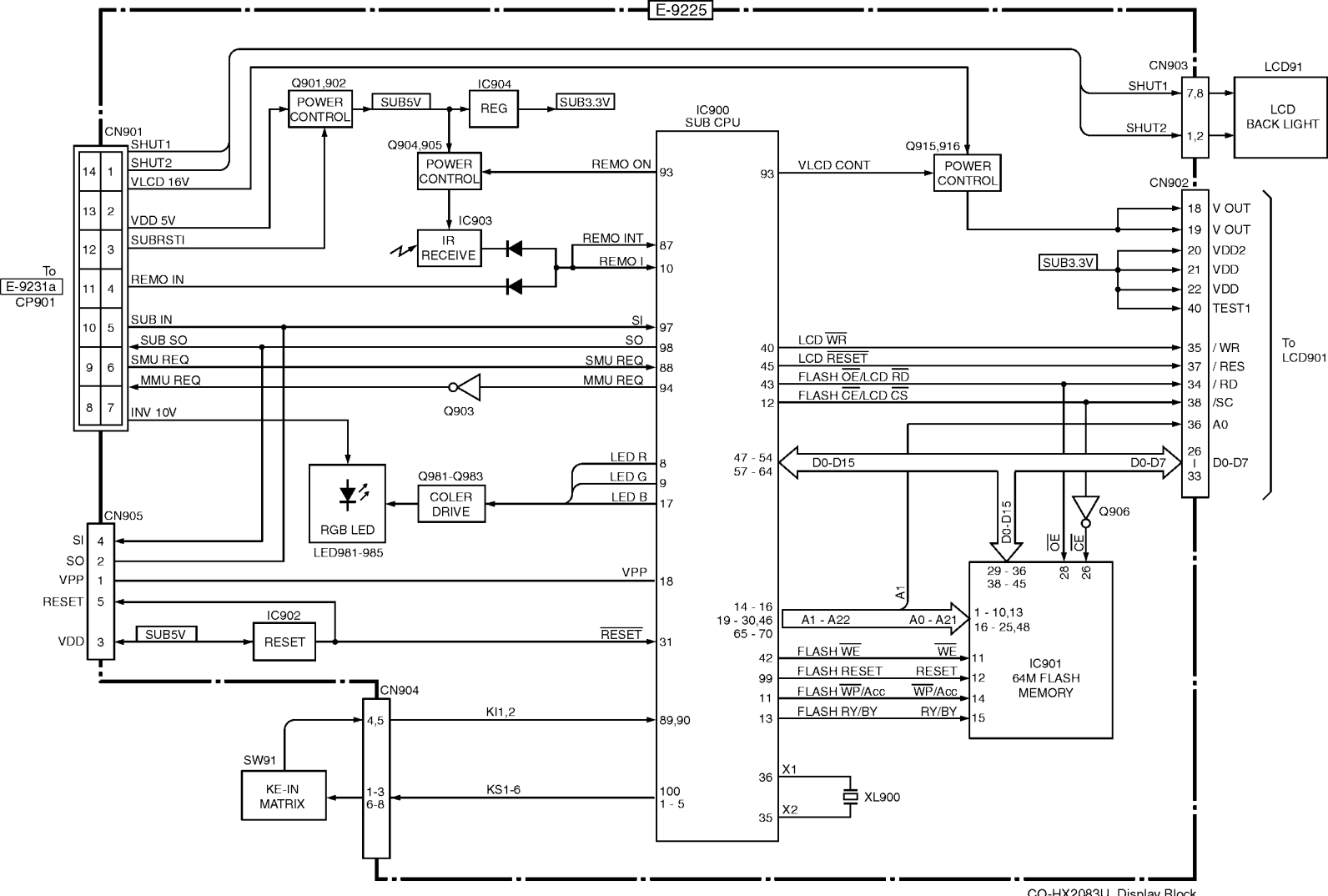

CQ-HX2083U Display Block

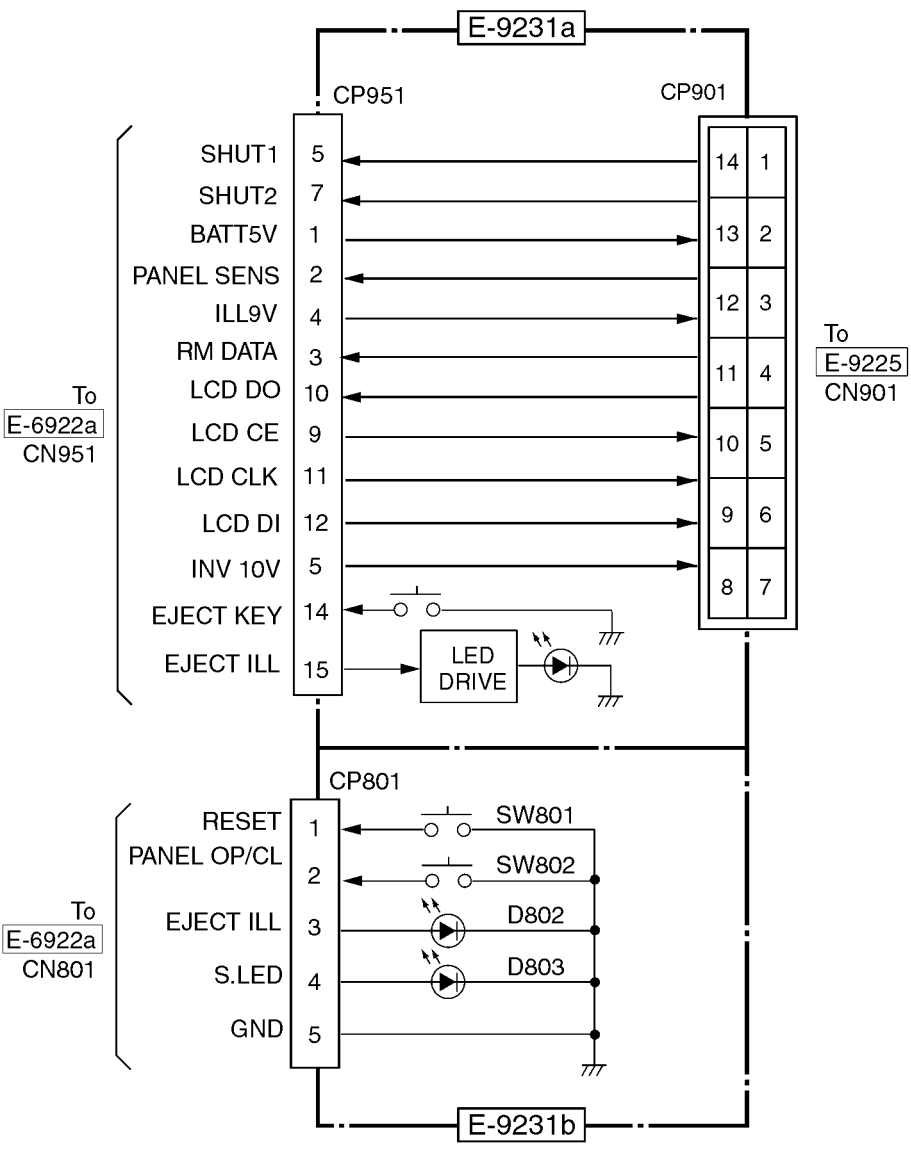
E-9231a
CP951
CP901
SHUT1
SHUT2
BATT5V
PANEL SENS
ILL9V
RM DATA
LCD DO
LCD CE
LCD CLK
LCD DI
INV 10V
EJECT KEY
EJECT ILL
5
7
1
2
4
3
10
9
11
12
5
14
15
14 1
13 2
12 3
11 4
10 5
9 6
8 7
To
E-9225
CN901
To
E-6922a
CN951
LED
DRIVE
CP801
RESET
PANEL OP/CL
EJECT ILL
S.LED
GND
1
2
3
4
5
SW801
SW802
D802
D803
To
E-6922a
CN801
E-9231b

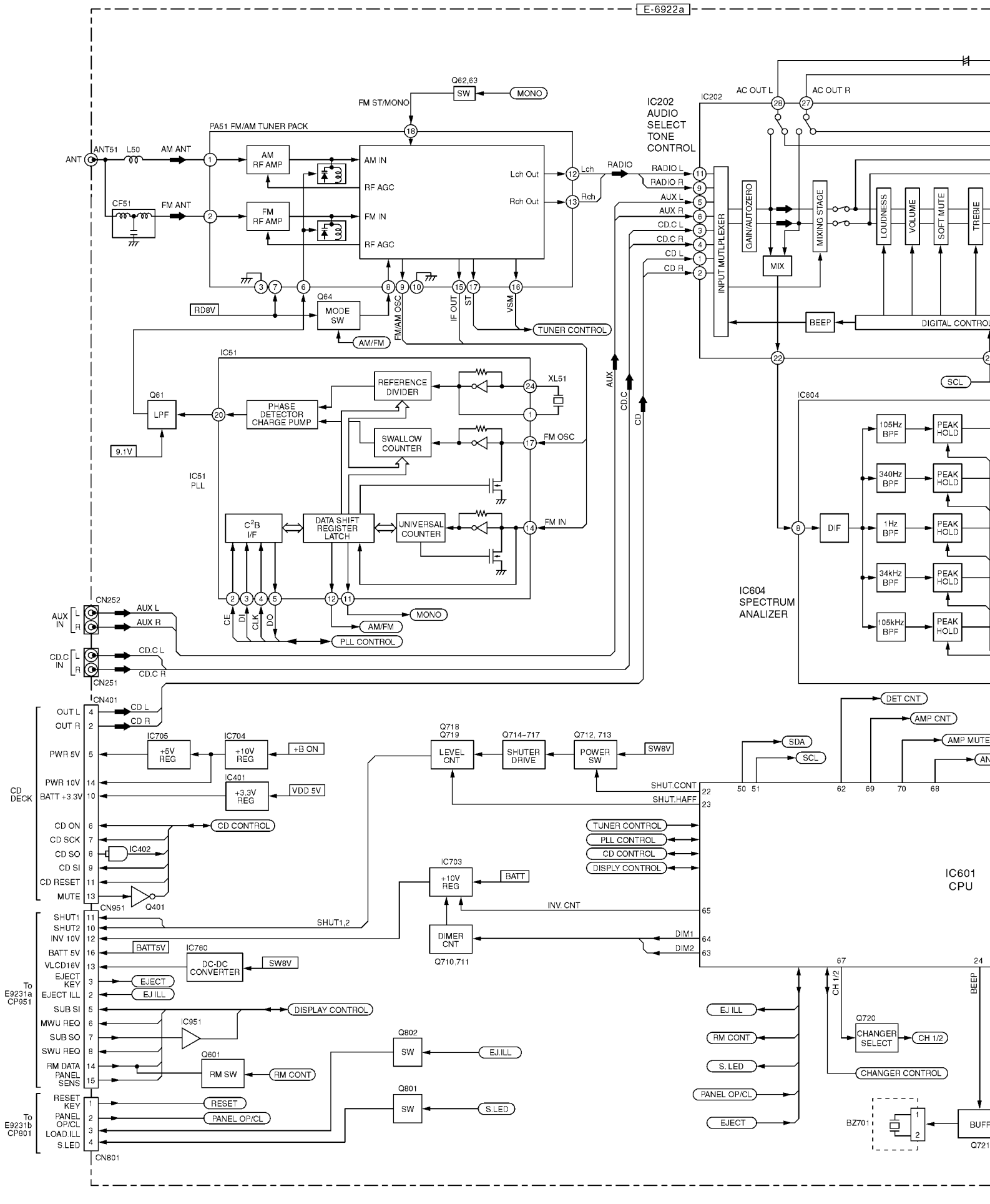
E-6922a
PA51 FM/AM TUNER PACK
ANT
ANT51
L50
AM ANT
CF51
FM ANT
AM RF AMP
FM RF AMP
AM IN
RF AGC
FM IN
RF AGC
Lch Out
Rch Out
Lch
Rch
RADIO
FM ST/MONO
Q62,63
SW
MONO
Q64
MODE SW
RD8V
AM/FM
FM/AM OSC
IF OUT
ST
VSM
TUNER CONTROL
IC202
AUDIO SELECT TONE CONTROL
AC OUT L
AC OUT R
RADIO L
RADIO R
AUX L
AUX R
CD.C L
CD.C R
CD L
CD R
INPUT MUTLPLEXER
GAIN/AUTOZERO
MIX
MIXING STAGE
LOUDNESS
VOLUME
SOFT MUTE
TREBLE
BEEP
DIGITAL CONTROL
SCL
IC51
PLL
Q61
LPF
9.1V
PHASE DETECTOR CHARGE PUMP
REFERENCE DIVIDER
XL51
SWALLOW COUNTER
FM OSC
C²B I/F
DATA SHIFT REGISTER LATCH
UNIVERSAL COUNTER
FM IN
CE
DI
CLK
DO
MONO
AM/FM
PLL CONTROL
AUX
CD.C
CD
IC604
SPECTRUM ANALIZER
DIF
105Hz BPF
340Hz BPF
1Hz BPF
34kHz BPF
105kHz BPF
PEAK HOLD
CN252
AUX IN
AUX L
AUX R
CD.C IN
CD.C L
CD.C R
CN251
CN401
CD DECK
OUT L
OUT R
CD L
CD R
PWR 5V
PWR 10V
BATT +3.3V
IC705
+5V REG
IC704
+10V REG
+B ON
IC401
+3.3V REG
VDD 5V
CD ON
CD SCK
CD SO
CD SI
CD RESET
MUTE
CD CONTROL
IC402
Q401
CN951
SHUT1
SHUT2
INV 10V
BATT 5V
VLCD16V
EJECT KEY
EJECT ILL
SUB SI
MWU REQ
SUB SO
SWU REQ
RM DATA
PANEL SENS
SHUT1,2
BATT5V
IC760
DC-DC CONVERTER
SW8V
EJECT
EJ ILL
DISPLAY CONTROL
IC951
Q601
RM SW
RM CONT
Q802
SW
EJ.ILL
Q801
SW
S.LED
To E9231a CP951
To E9231b CP801
RESET KEY
PANEL OP/CL
LOAD.ILL
S.LED
RESET
PANEL OP/CL
CN801
Q718 Q719
LEVEL CNT
Q714-717
SHUTER DRIVE
Q712, 713
POWER SW
SW8V
SHUT.CONT
SHUT.HAFF
SDA
SCL
DET CNT
AMP CNT
AMP MUTE
TUNER CONTROL
PLL CONTROL
CD CONTROL
DISPLY CONTROL
IC703
+10V REG
BATT
INV. CNT
DIMER CNT
Q710,711
DIM1
DIM2
IC601
CPU
EJ ILL
RM CONT
S. LED
PANEL OP/CL
EJECT
CH 1/2
Q720
CHANGER SELECT
CHANGER CONTROL
BEEP
BZ701
BUFF
Q721

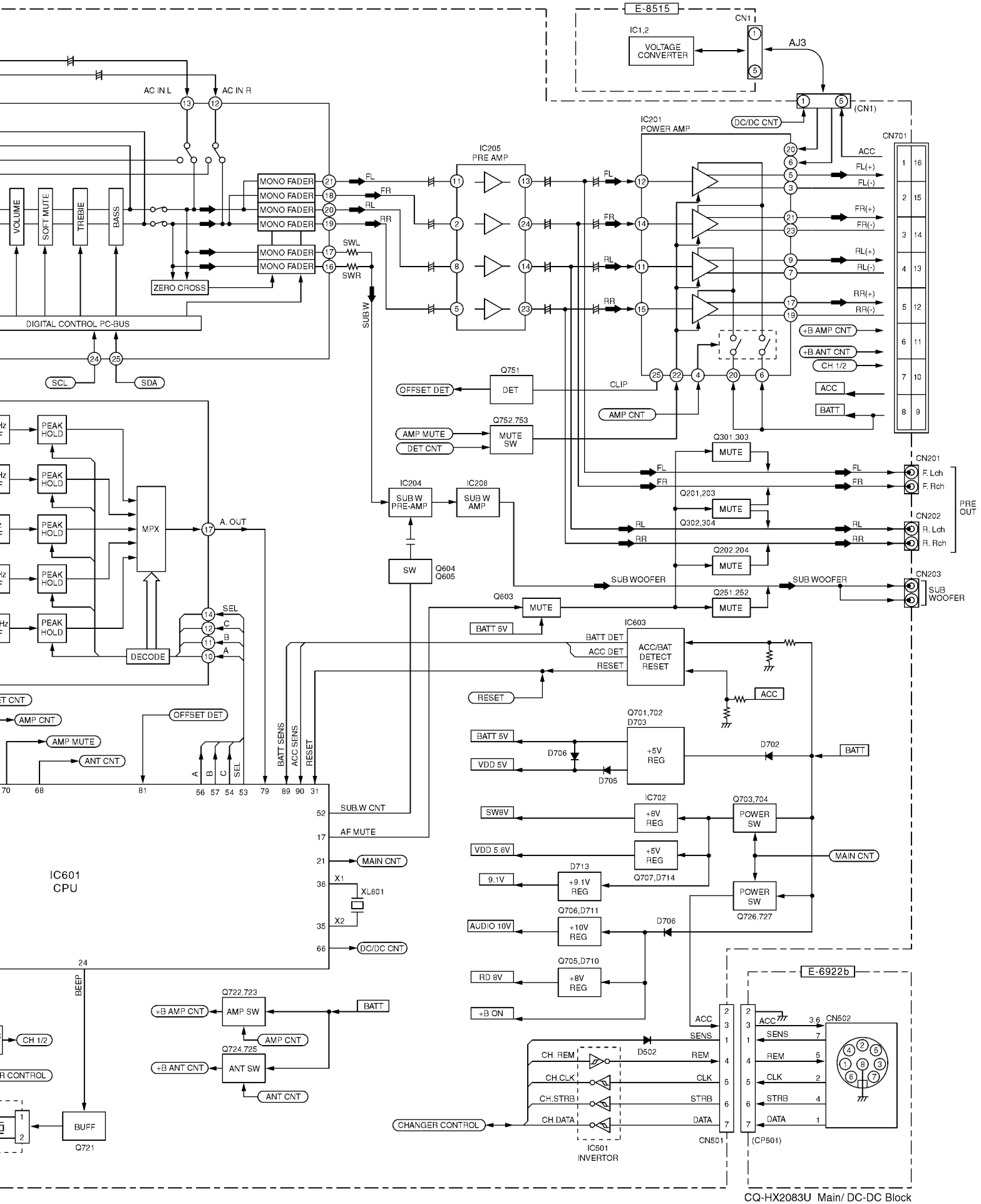
E-8515
IC1,2
VOLTAGE CONVERTER
CN1
AJ3
(CN1)
AC IN L
AC IN R
VOLUME
SOFT MUTE
TREBLE
BASS
MONO FADER
ZERO CROSS
DIGITAL CONTROL PC-BUS
SCL
SDA
SWL
SWR
SUB W
IC205
PRE AMP
IC201
POWER AMP
DC/DC CNT
CN701
ACC
FL(+)
FL(-)
FR(+)
FR(-)
RL(+)
RL(-)
RR(+)
RR(-)
+B AMP CNT
+B ANT CNT
CH 1/2
ACC
BATT
Q751
DET
OFFSET DET
CLIP
AMP CNT
Q752,753
MUTE SW
AMP MUTE
DET CNT
Q301,303
MUTE
CN201
F. Lch
F. Rch
PRE OUT
Q201,203
Q302,304
CN202
R. Lch
R. Rch
Q202,204
IC204
SUB W PRE-AMP
IC206
SUB W AMP
SW
Q604
Q605
SUB WOOFER
CN203
SUB WOOFER
Q603
Q251,252
PEAK HOLD
MPX
A. OUT
SEL
DECODE
IC603
ACC/BAT DETECT RESET
BATT DET
ACC DET
RESET
BATT 5V
Q701,702
D703
+5V REG
D706
D705
D702
VDD 5V
IC702
+8V REG
Q703,704
POWER SW
SW8V
VDD 5.6V
Q707,D714
MAIN CNT
D713
+9.1V REG
9.1V
Q726,727
Q706,D711
+10V REG
AUDIO 10V
Q705,D710
+8V REG
RD 8V
+B ON
IC601
CPU
SUB.W CNT
AF MUTE
X1
XL601
X2
DC/DC CNT
BATT SENS
ACC SENS
BEEP
Q722,723
AMP SW
Q724,725
ANT SW
ANT CNT
BUFF
Q721
E-6922b
CN502
(CP501)
CN501
IC501
INVERTOR
CH. REM
CH.CLK
CH.STRB
CH.DATA
CHANGER CONTROL
D502
SENS
REM
CLK
STRB
DATA

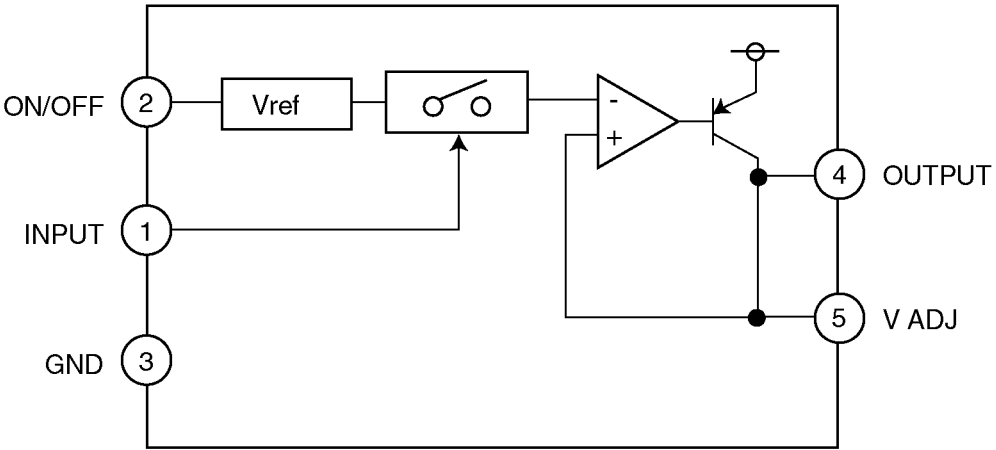
ON/OFF
2
Vref
INPUT
1
GND
3
-
+
4
OUTPUT
5
V ADJ

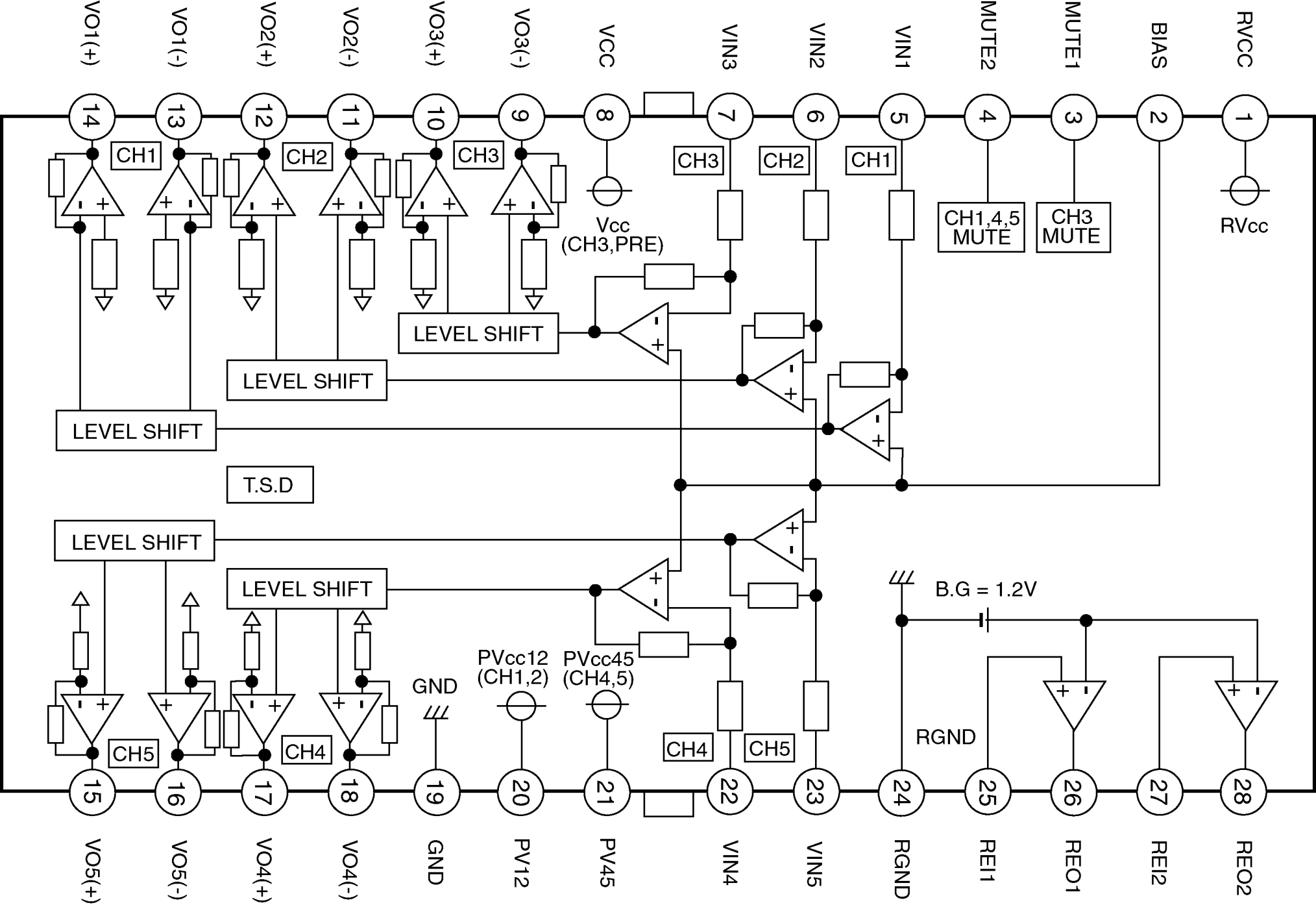
VO1(+)
VO1(-)
VO2(+)
VO2(-)
VO3(+)
VO3(-)
VCC
VIN3
VIN2
VIN1
MUTE2
MUTE1
BIAS
RVCC
14
13
12
11
10
9
8
7
6
5
4
3
2
1
CH1
CH2
CH3
CH3
CH2
CH1
Vcc
(CH3,PRE)
CH1,4,5
MUTE
CH3
MUTE
RVcc
LEVEL SHIFT
LEVEL SHIFT
LEVEL SHIFT
T.S.D
LEVEL SHIFT
LEVEL SHIFT
B.G = 1.2V
PVcc12
(CH1,2)
PVcc45
(CH4,5)
GND
CH5
CH4
CH4
CH5
RGND
15
16
17
18
19
20
21
22
23
24
25
26
27
28
VO5(+)
VO5(-)
VO4(+)
VO4(-)
GND
PV12
PV45
VIN4
VIN5
RGND
REI1
REO1
REI2
REO2

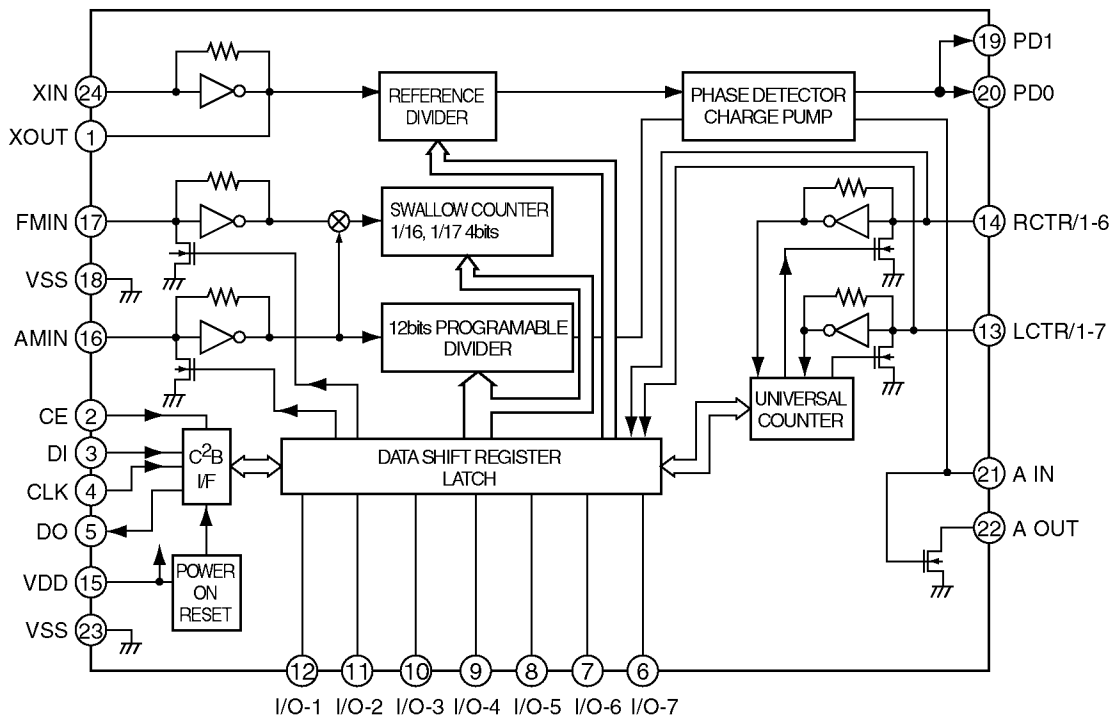
XIN
24
XOUT
1
FMIN
17
VSS
18
AMIN
16
CE
2
DI
3
CLK
4
DO
5
VDD
15
VSS
23
REFERENCE DIVIDER
PHASE DETECTOR CHARGE PUMP
SWALLOW COUNTER 1/16, 1/17 4bits
12bits PROGRAMABLE DIVIDER
C2B I/F
DATA SHIFT REGISTER LATCH
POWER ON RESET
UNIVERSAL COUNTER
19
PD1
20
PD0
14
RCTR/1-6
13
LCTR/1-7
21
A IN
22
A OUT
12
11
10
9
8
7
6
I/O-1
I/O-2
I/O-3
I/O-4
I/O-5
I/O-6
I/O-7

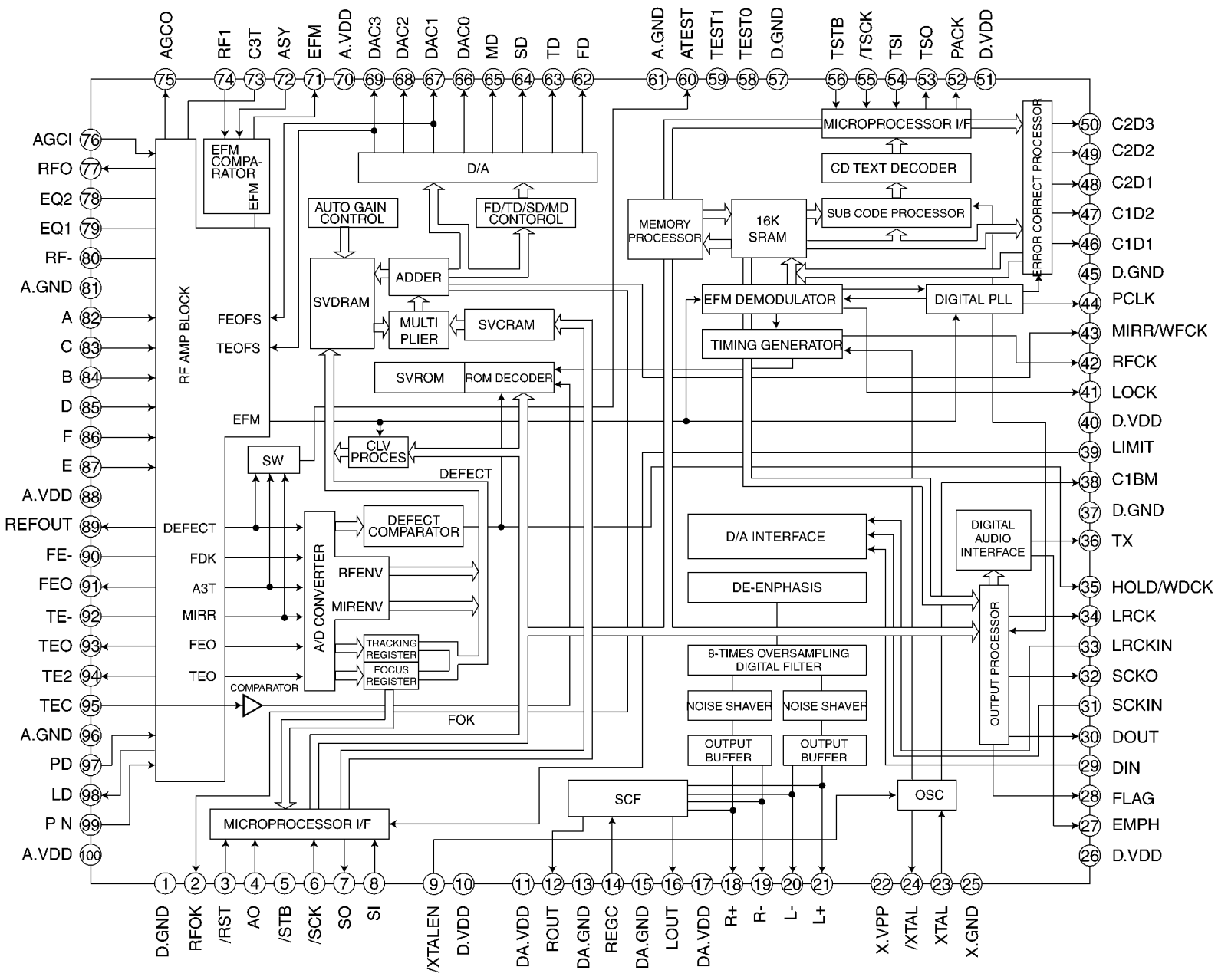
AGCO 75
RF1 74
C3T 73
ASY 72
EFM 71
A.VDD 70
DAC3 69
DAC2 68
DAC1 67
DAC0 66
MD 65
SD 64
TD 63
FD 62
A.GND 61
ATEST 60
TEST1 59
TEST0 58
D.GND 57
TSTB 56
/TSCK 55
TSI 54
TSO 53
PACK 52
D.VDD 51
AGCI 76
RFO 77
EQ2 78
EQ1 79
RF- 80
A.GND 81
A 82
C 83
B 84
D 85
F 86
E 87
A.VDD 88
REFOUT 89
FE- 90
FEO 91
TE- 92
TEO 93
TE2 94
TEC 95
A.GND 96
PD 97
LD 98
P N 99
A.VDD 100
C2D3 50
C2D2 49
C2D1 48
C1D2 47
C1D1 46
D.GND 45
PCLK 44
MIRR/WFCK 43
RFCK 42
LOCK 41
D.VDD 40
LIMIT 39
C1BM 38
D.GND 37
TX 36
HOLD/WDCK 35
LRCK 34
LRCKIN 33
SCKO 32
SCKIN 31
DOUT 30
DIN 29
FLAG 28
EMPH 27
D.VDD 26
D.GND 1
RFOK 2
/RST 3
AO 4
/STB 5
/SCK 6
SO 7
SI 8
/XTALEN 9
D.VDD 10
DA.VDD 11
ROUT 12
DA.GND 13
REGC 14
DA.GND 15
LOUT 16
DA.VDD 17
R+ 18
R- 19
L- 20
L+ 21
X.VPP 22
/XTAL 24
XTAL 23
X.GND 25
RF AMP BLOCK
EFM COMPA-RATOR
EFM
FEOFS
TEOFS
EFM
DEFECT
FDK
A3T
MIRR
FEO
TEO
COMPARATOR
FOK
D/A
AUTO GAIN CONTROL
FD/TD/SD/MD CONTOROL
SVDRAM
ADDER
MULTI PLIER
SVCRAM
SVROM
ROM DECODER
SW
CLV PROCES
DEFECT
DEFECT COMPARATOR
A/D CONVERTER
RFENV
MIRENV
TRACKING REGISTER
FOCUS REGISTER
MICROPROCESSOR I/F
MEMORY PROCESSOR
16K SRAM
MICROPROCESSOR I/F
CD TEXT DECODER
SUB CODE PROCESSOR
ERROR CORRECT PROCESSOR
EFM DEMODULATOR
DIGITAL PLL
TIMING GENERATOR
D/A INTERFACE
DE-ENPHASIS
DIGITAL AUDIO INTERFACE
OUTPUT PROCESSOR
8-TIMES OVERSAMPLING DIGITAL FILTER
NOISE SHAVER
NOISE SHAVER
OUTPUT BUFFER
OUTPUT BUFFER
SCF
OSC
MICROPROCESSOR I/F

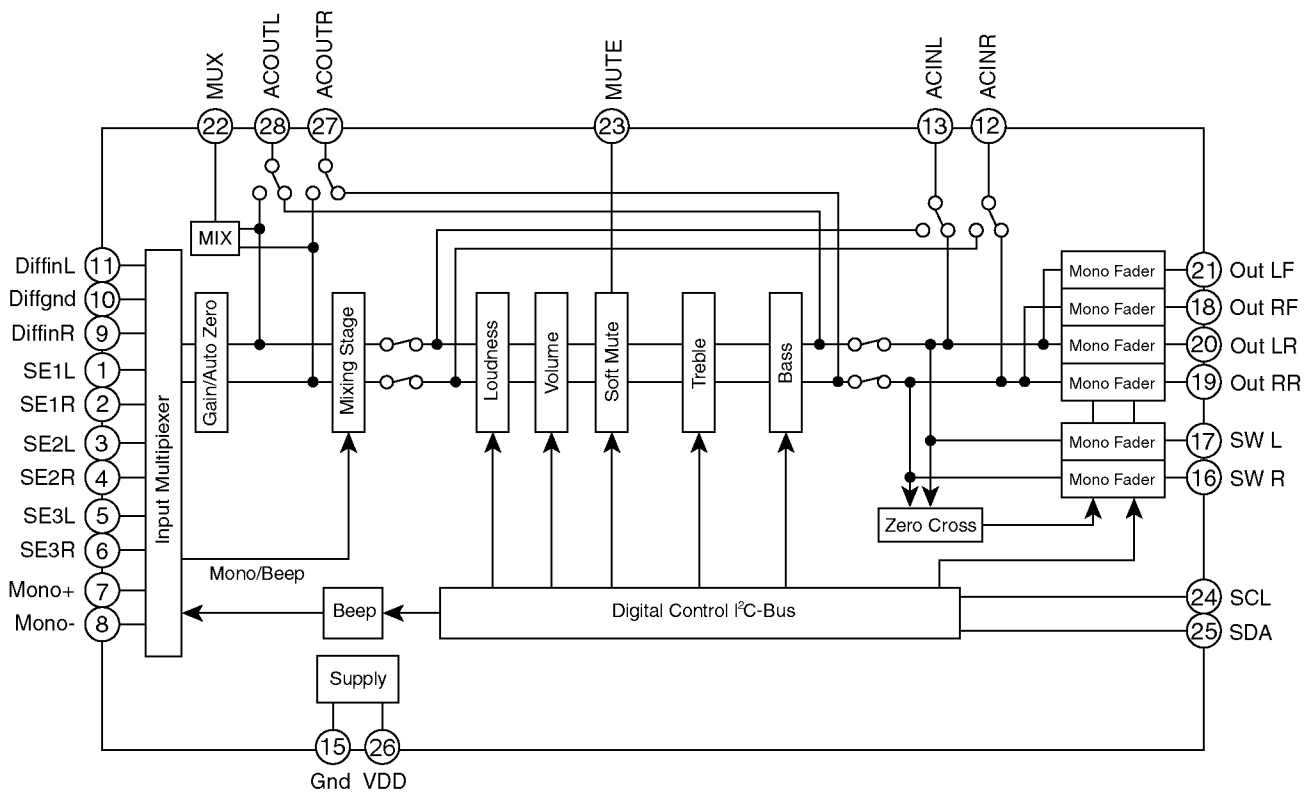
MUX
ACOUTL
ACOUTR
MUTE
ACINL
ACINR
22
28
27
23
13
12
MIX
DiffinL
Diffgnd
DiffinR
SE1L
SE1R
SE2L
SE2R
SE3L
SE3R
Mono+
Mono-
11
10
9
1
2
3
4
5
6
7
8
Input Multipiexer
Gain/Auto Zero
Mixing Stage
Loudness
Volume
Soft Mute
Treble
Bass
Mono Fader
Mono Fader
Mono Fader
Mono Fader
Mono Fader
Mono Fader
21
18
20
19
17
16
Out LF
Out RF
Out LR
Out RR
SW L
SW R
Zero Cross
Mono/Beep
Beep
Digital Control I²C-Bus
24
25
SCL
SDA
Supply
15
26
Gnd
VDD

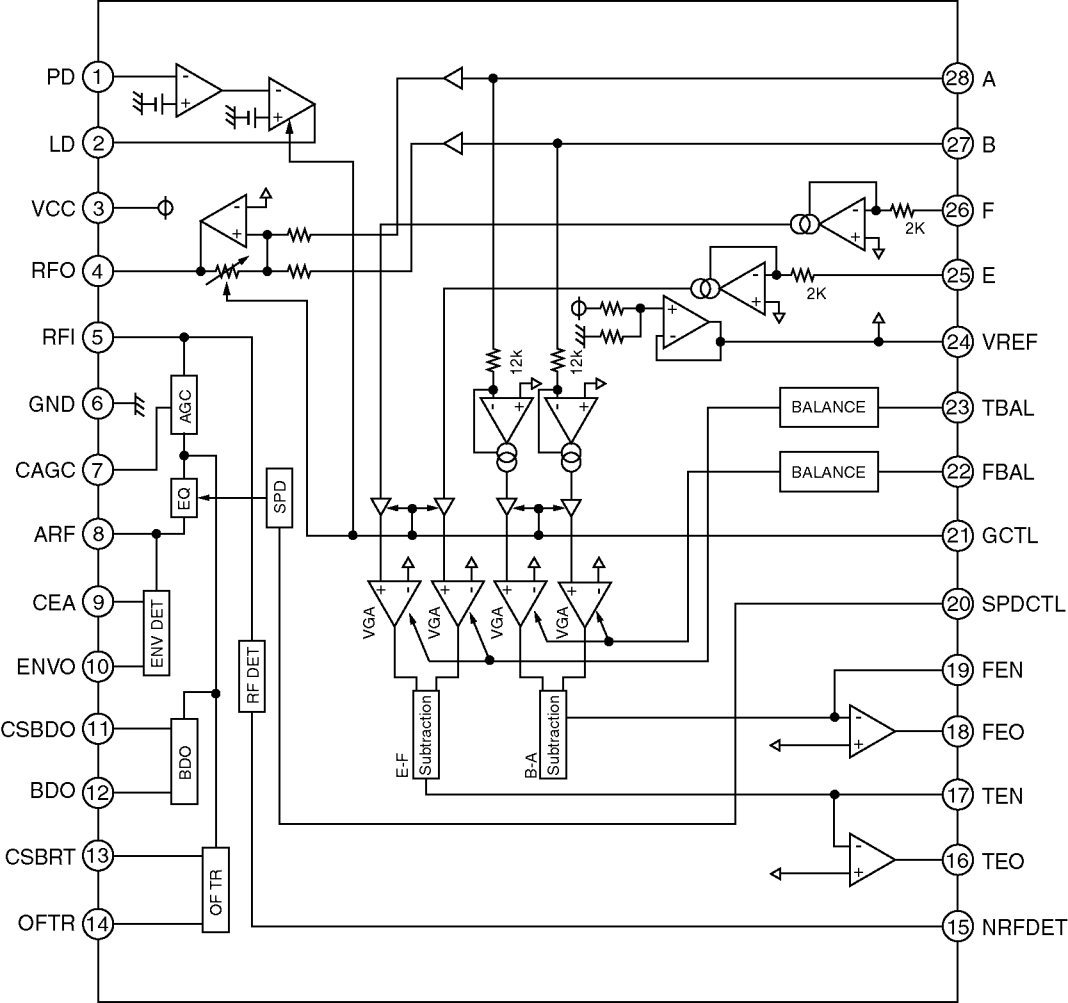
PD 1
LD 2
VCC 3
RFO 4
RFI 5
GND 6
CAGC 7
ARF 8
CEA 9
ENVO 10
CSBDO 11
BDO 12
CSBRT 13
OFTR 14
28 A
27 B
26 F
25 E
24 VREF
23 TBAL
22 FBAL
21 GCTL
20 SPDCTL
19 FEN
18 FEO
17 TEN
16 TEO
15 NRFDET
AGC
EQ
SPD
ENV DET
RF DET
BDO
OF TR
12k
12k
2K
2K
BALANCE
BALANCE
VGA
VGA
VGA
VGA
E-F Subtraction
B-A Subtraction

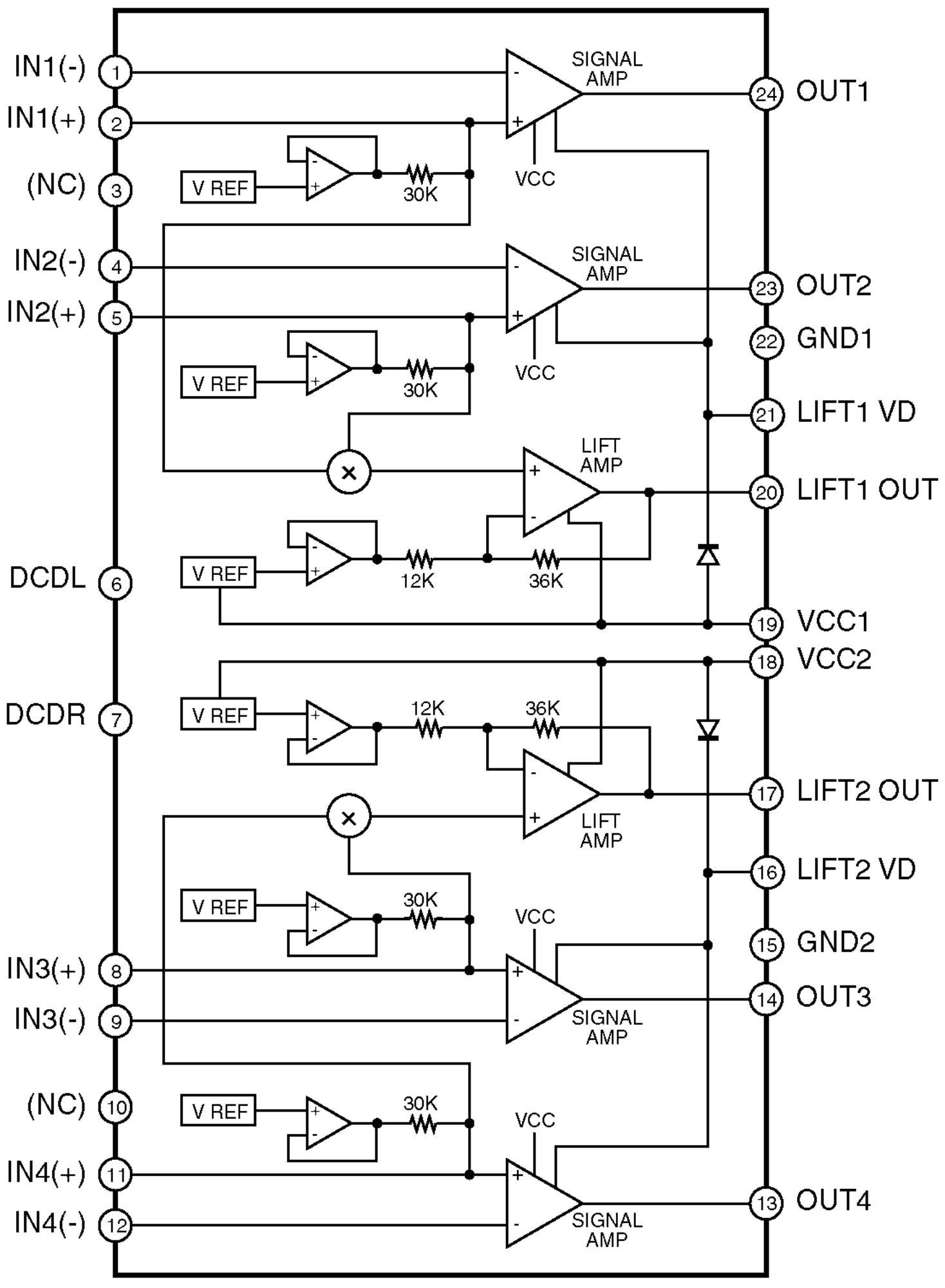
IN1(-)
1
IN1(+)
2
(NC)
3
IN2(-)
4
IN2(+)
5
DCDL
6
DCDR
7
IN3(+)
8
IN3(-)
9
(NC)
10
IN4(+)
11
IN4(-)
12
SIGNAL AMP
VCC
V REF
30K
LIFT AMP
12K
36K
24
OUT1
23
OUT2
22
GND1
21
LIFT1 VD
20
LIFT1 OUT
19
VCC1
18
VCC2
17
LIFT2 OUT
16
LIFT2 VD
15
GND2
14
OUT3
13
OUT4

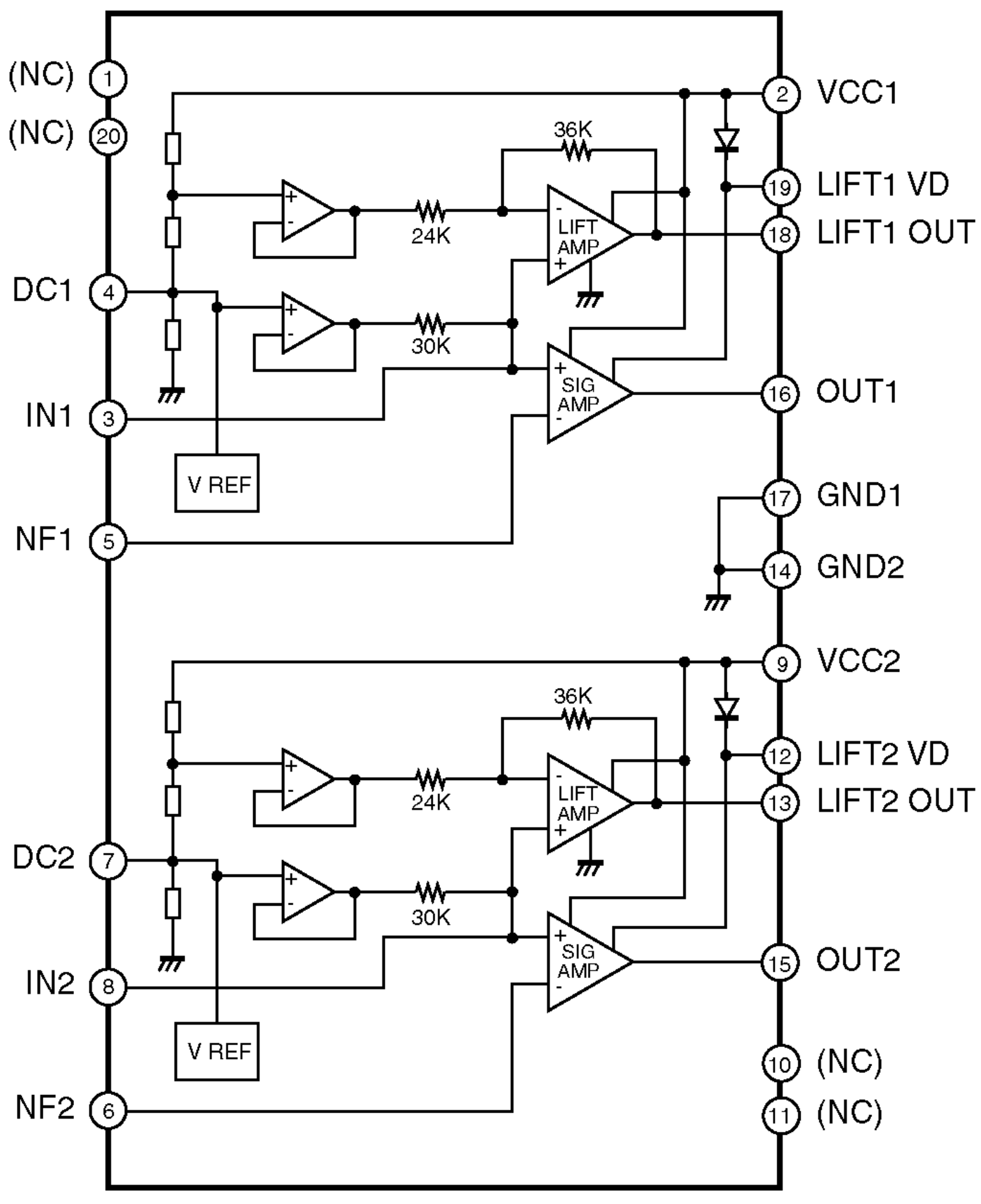
(NC) 1
(NC) 20
DC1 4
IN1 3
NF1 5
DC2 7
IN2 8
NF2 6
2 VCC1
19 LIFT1 VD
18 LIFT1 OUT
16 OUT1
17 GND1
14 GND2
9 VCC2
12 LIFT2 VD
13 LIFT2 OUT
15 OUT2
10 (NC)
11 (NC)
36K
24K
30K
LIFT AMP
SIG AMP
V REF
36K
24K
30K
LIFT AMP
SIG AMP
V REF

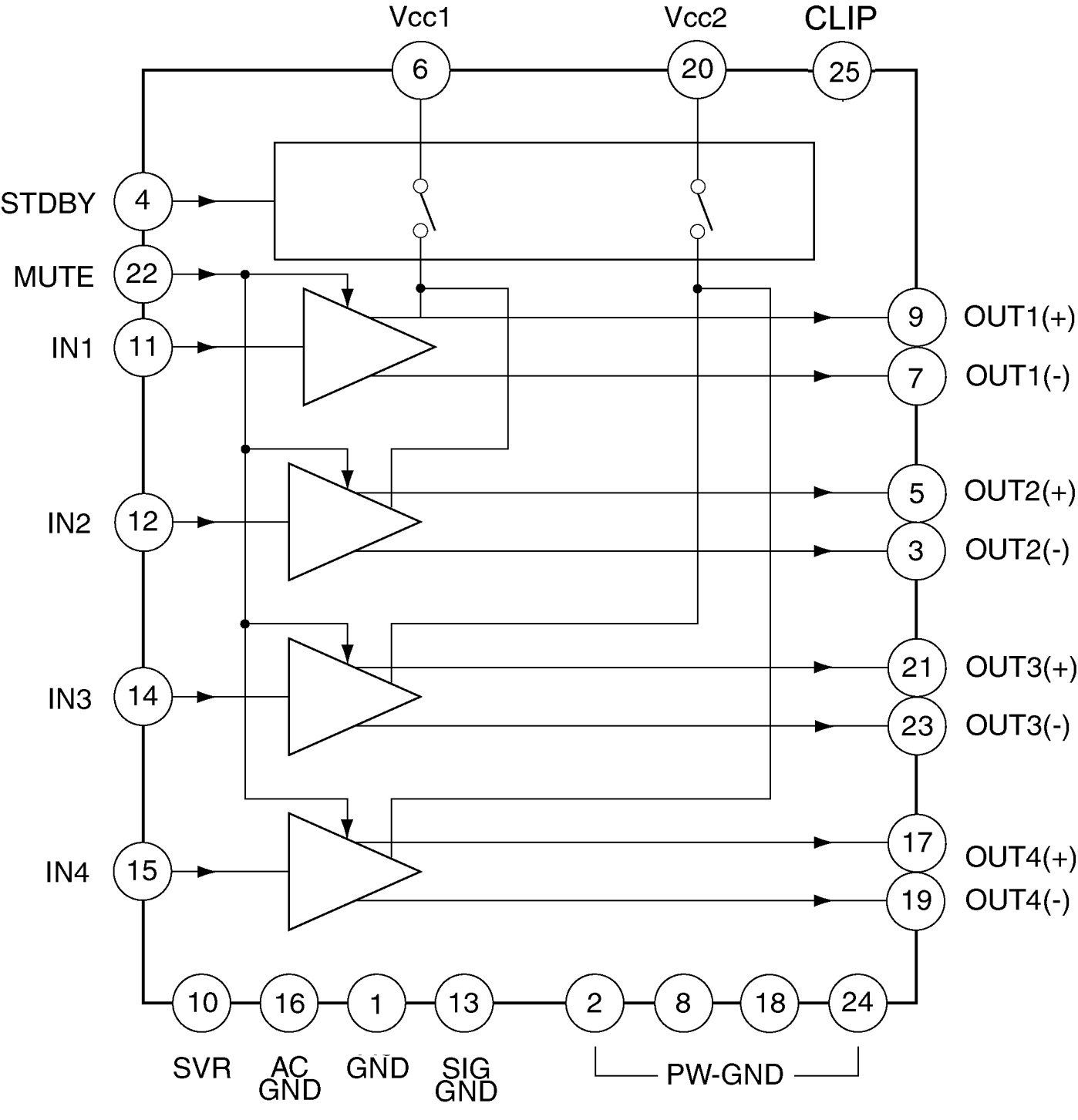
Vcc1
Vcc2
CLIP
6
20
25
STDBY
4
MUTE
22
IN1
11
IN2
12
IN3
14
IN4
15
9
OUT1(+)
7
OUT1(-)
5
OUT2(+)
3
OUT2(-)
21
OUT3(+)
23
OUT3(-)
17
OUT4(+)
19
OUT4(-)
10
16
1
13
2
8
18
24
SVR
AC GND
GND
SIG GND
PW-GND

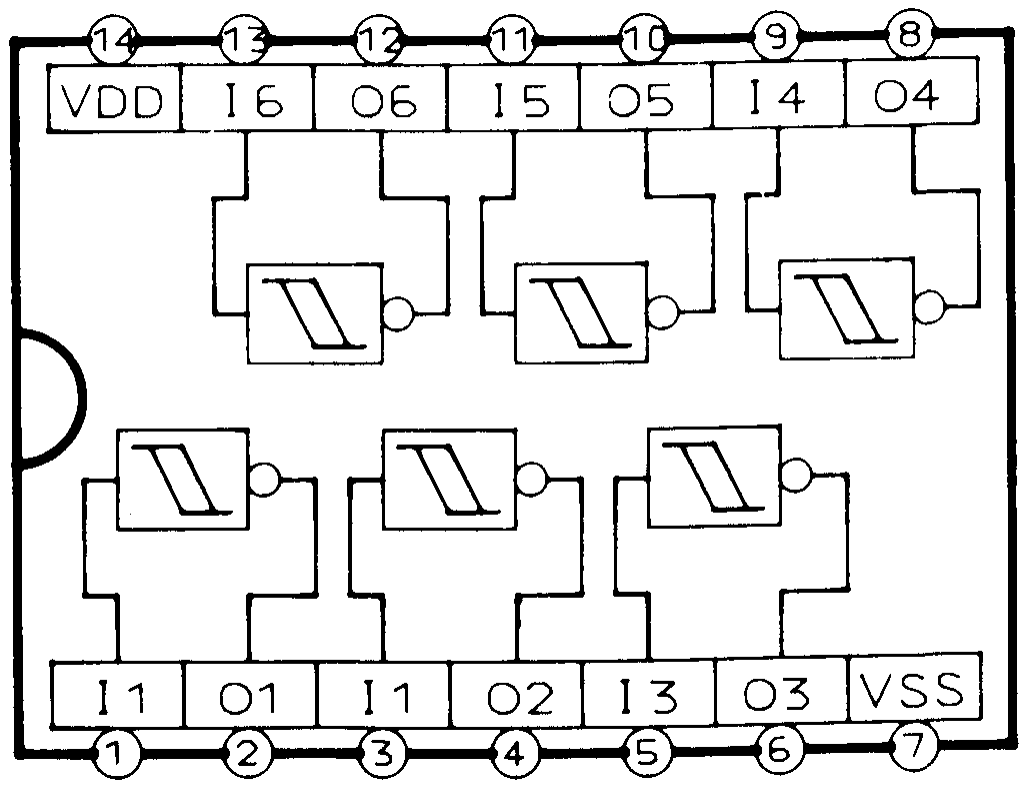
14
13
12
11
10
9
8
VDD
I6
O6
I5
O5
I4
O4
I1
O1
I1
O2
I3
O3
VSS
1
2
3
4
5
6
7

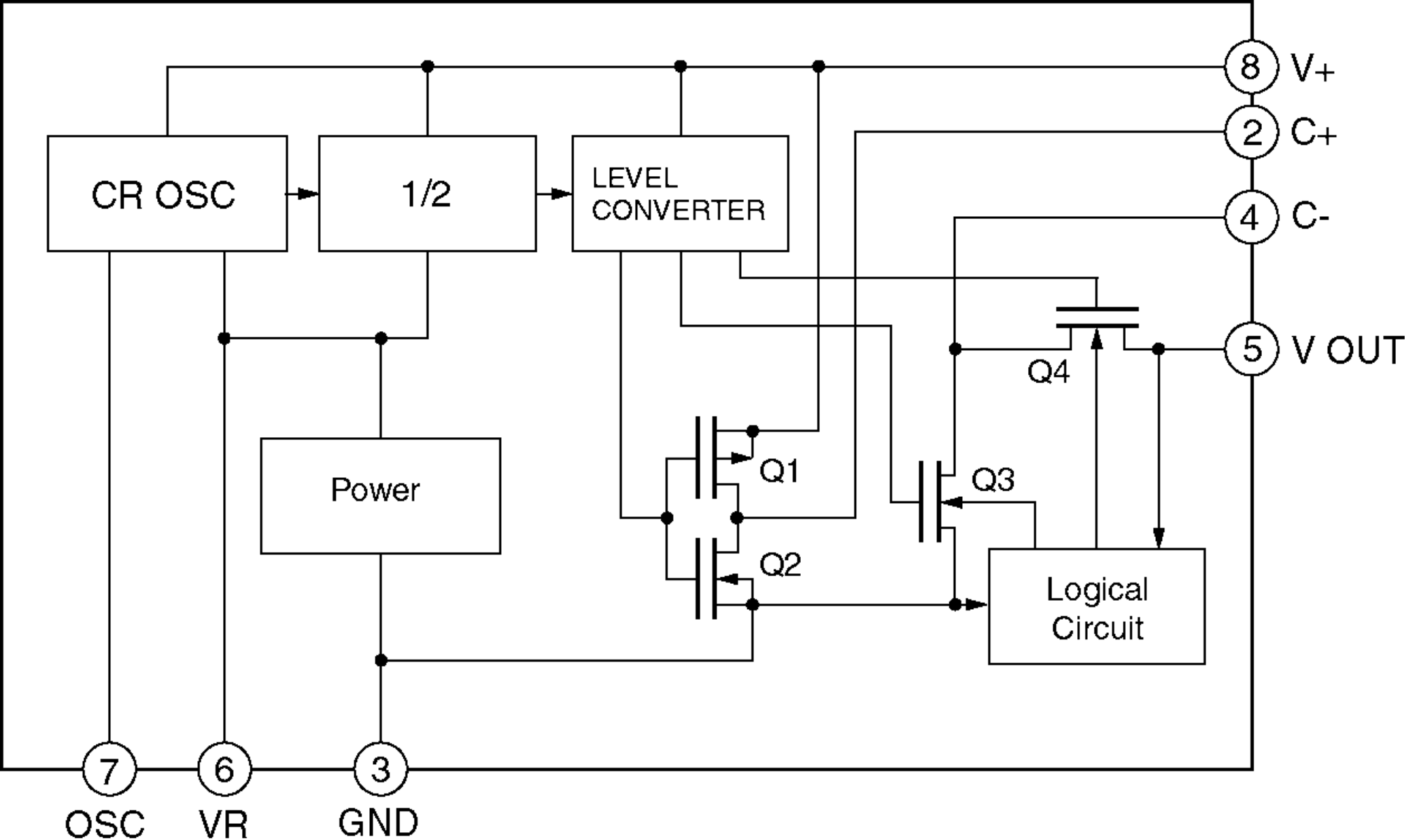
CR OSC
1/2
LEVEL CONVERTER
Power
Q1
Q2
Q3
Q4
Logical Circuit
8
V+
2
C+
4
C-
5
V OUT
7
OSC
6
VR
3
GND

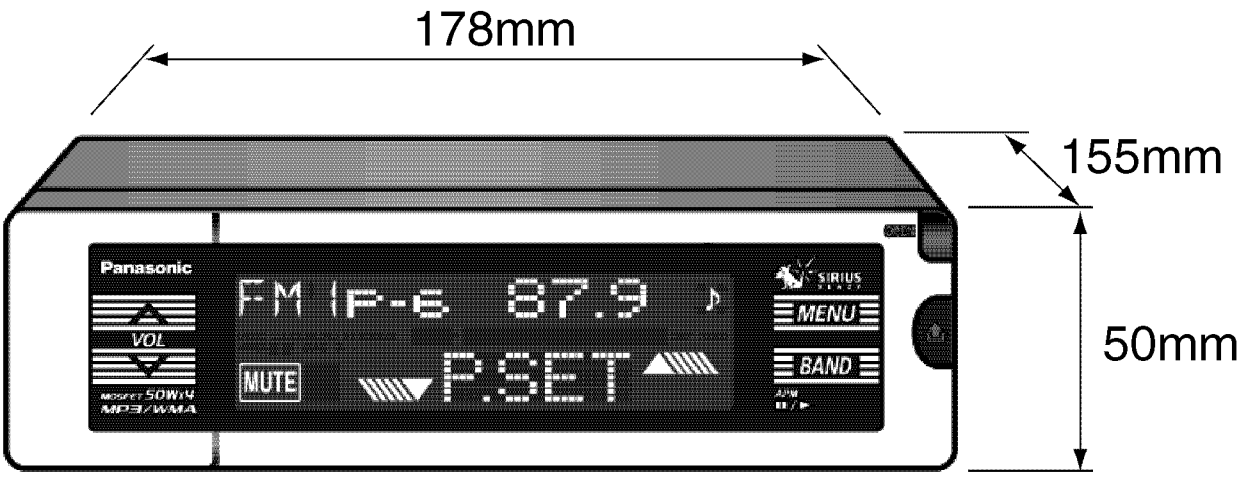
178mm
155mm
50mm
Panasonic
VOL
MUTE
FM P-6 87.9
P.SET
SIRIUS
MENU
BAND
MOSFET 50Wx4
MP3/WMA

Printed in Japan (K)
2002.1
(Recycled Paper)

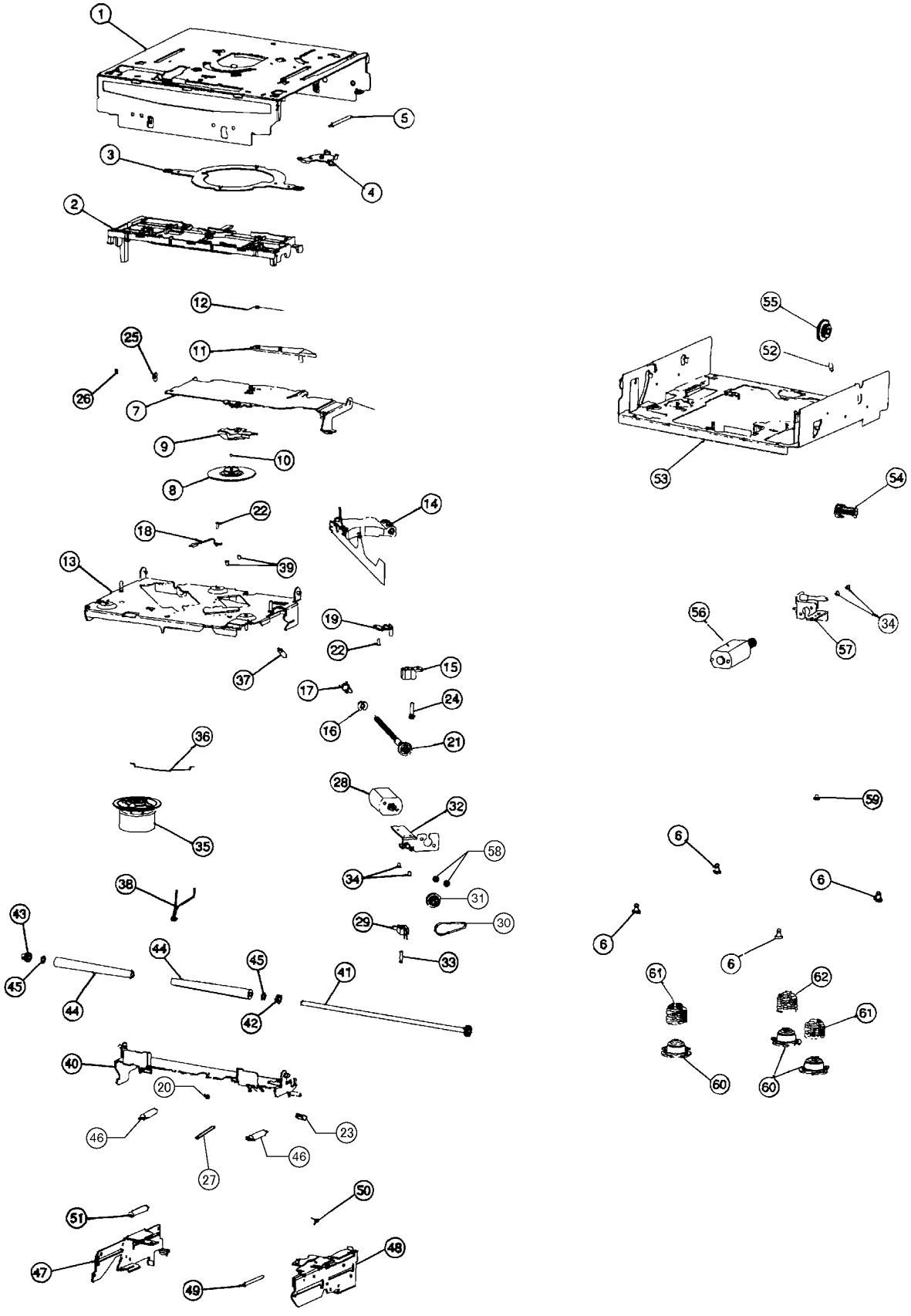
1
5
3
4
2
12
25
11
26
7
9
10
8
22
14
18
39
13
19
22
37
15
17
24
16
21
36
28
32
35
58
34
31
38
29
30
43
33
44
45
45
41
44
42
40
20
46
23
46
27
50
51
47
48
49
55
52
53
54
56
34
57
59
6
6
6
6
61
62
61
60
60

NCD8
'01.12

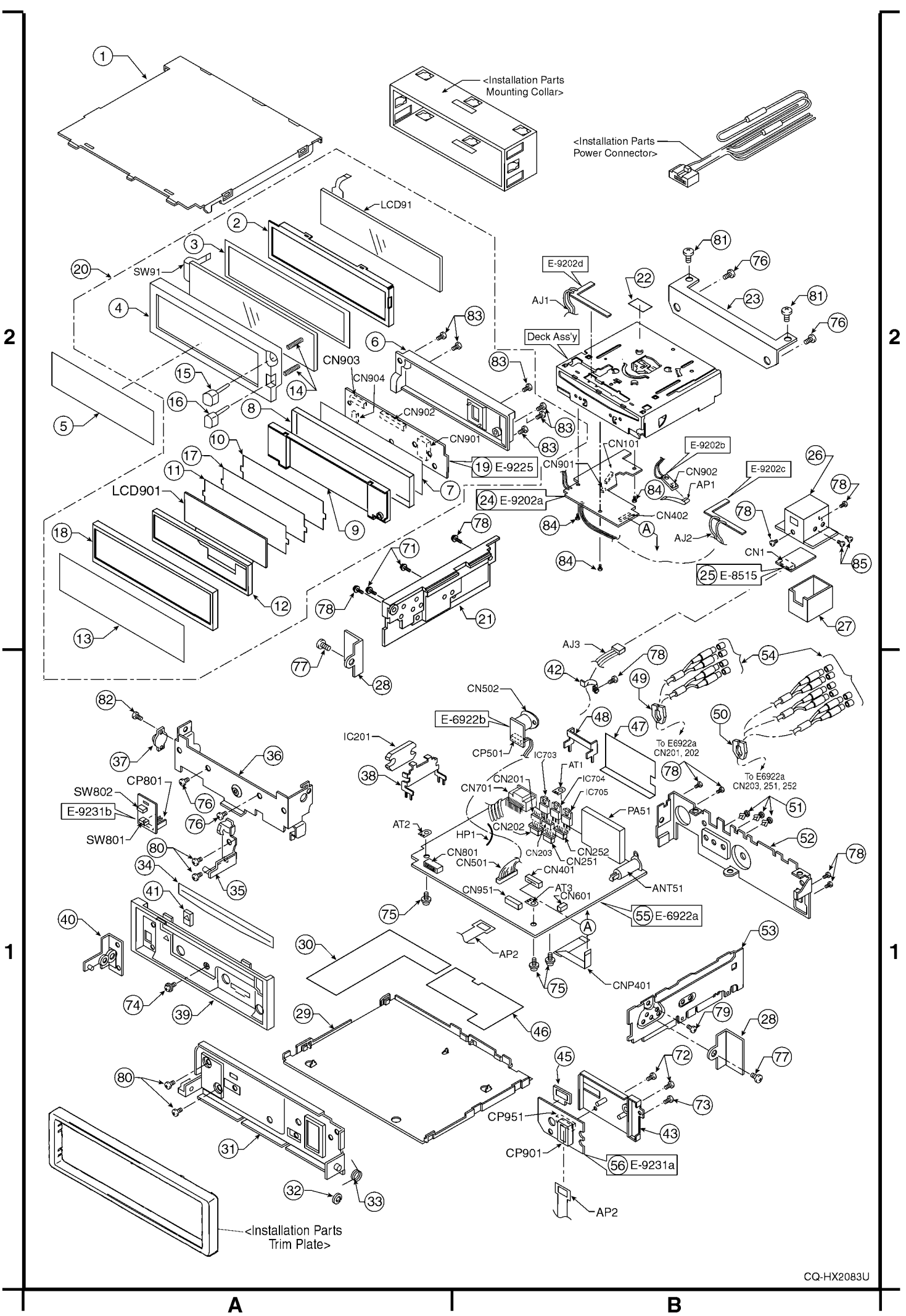

CQ-HX2083U

A B

CAUTION:

This product utilizes a laser diode with the unit turned "on", laser radiation is emitted from the pickup lens.

Laser radiation from the pickup lens is safety level, but be sure the followings:

1. Do not disassemble the optical pickup unit, since radiation from exposed laser diode is dangerous.
2. Do not adjust the variable resistor on the pickup unit. It was already adjusted.
3. Do not look at the focus lens using optical instruments.
4. Recommend not to look at pickup lens for a long time.

DANGER!
Visible and Invisible laser radiation when open.
Avoid direct exposure to beam.

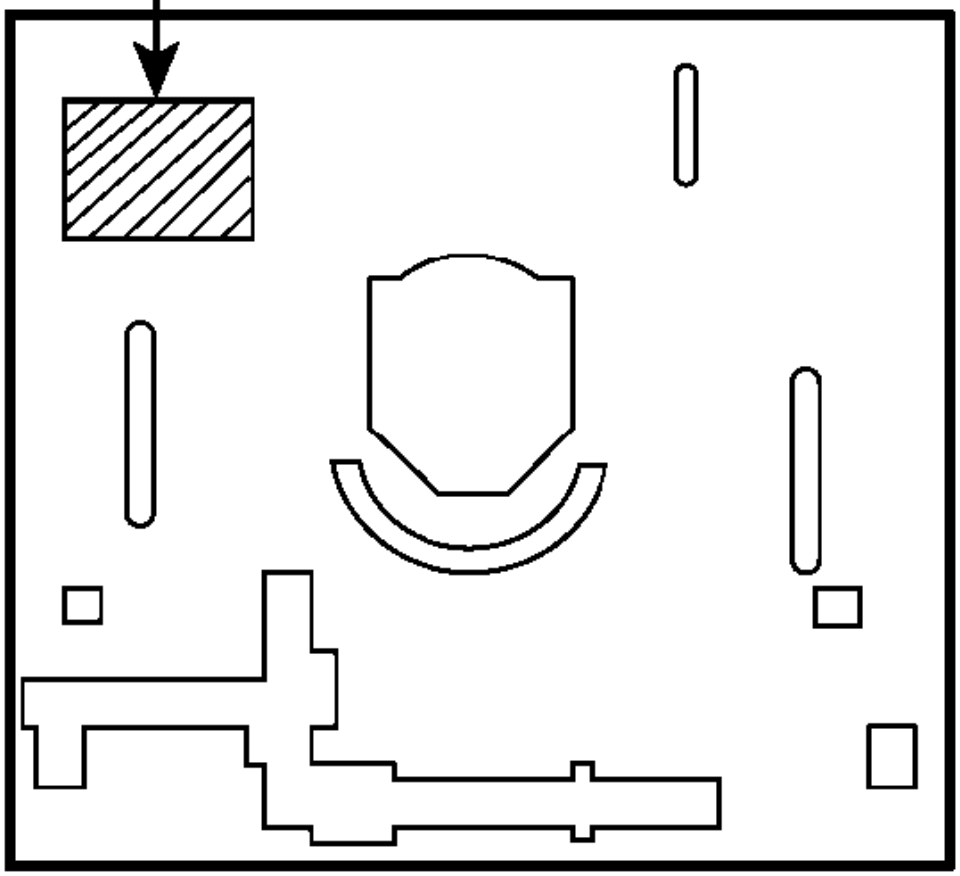

Deck Ass'y (Upper Side)

Caution
This Product utilizes a laser.
Use of controls or adjustments or performance of procedures other than those specified herein may result in hazardous radiation exposure.

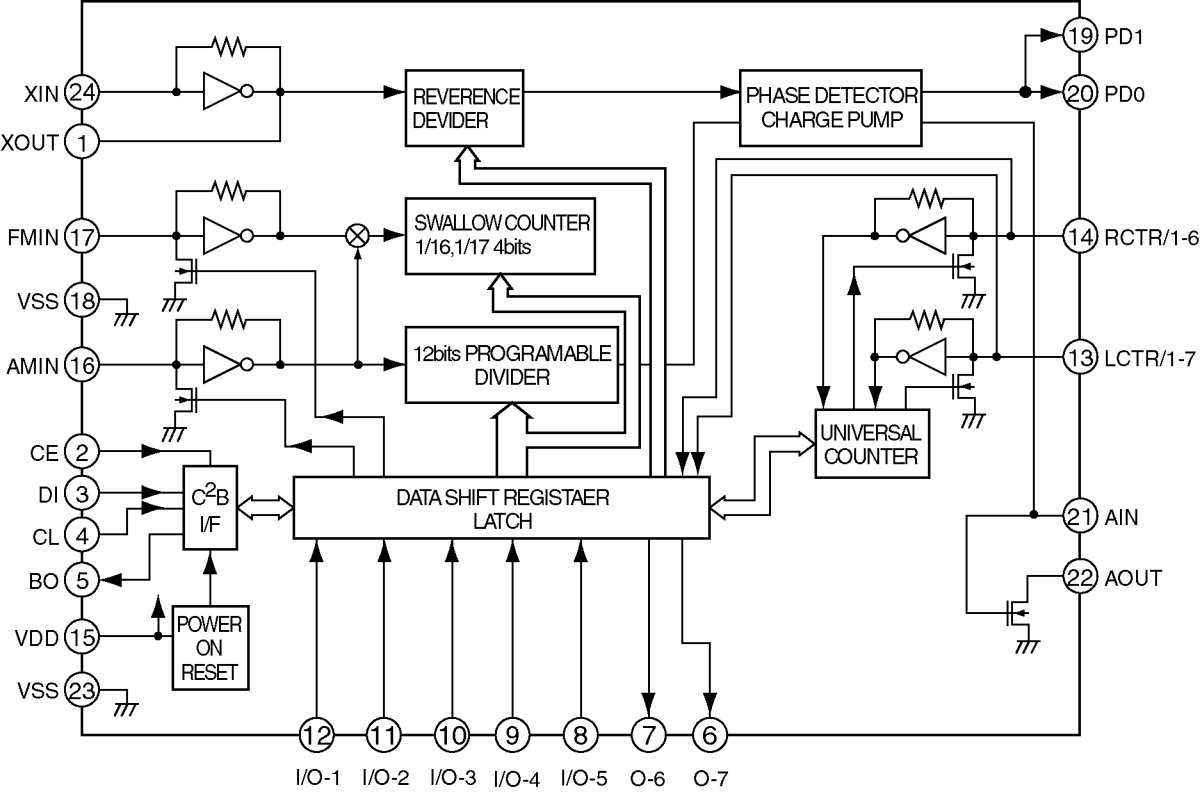
XIN 24
XOUT 1
FMIN 17
VSS 18
AMIN 16
CE 2
DI 3
CL 4
BO 5
VDD 15
VSS 23
REVERENCE DEVIDER
PHASE DETECTOR CHARGE PUMP
SWALLOW COUNTER 1/16,1/17 4bits
12bits PROGRAMABLE DIVIDER
UNIVERSAL COUNTER
C2B I/F
DATA SHIFT REGISTAER LATCH
POWER ON RESET
19 PD1
20 PD0
14 RCTR/1-6
13 LCTR/1-7
21 AIN
22 AOUT
12 I/O-1
11 I/O-2
10 I/O-3
9 I/O-4
8 I/O-5
7 O-6
6 O-7

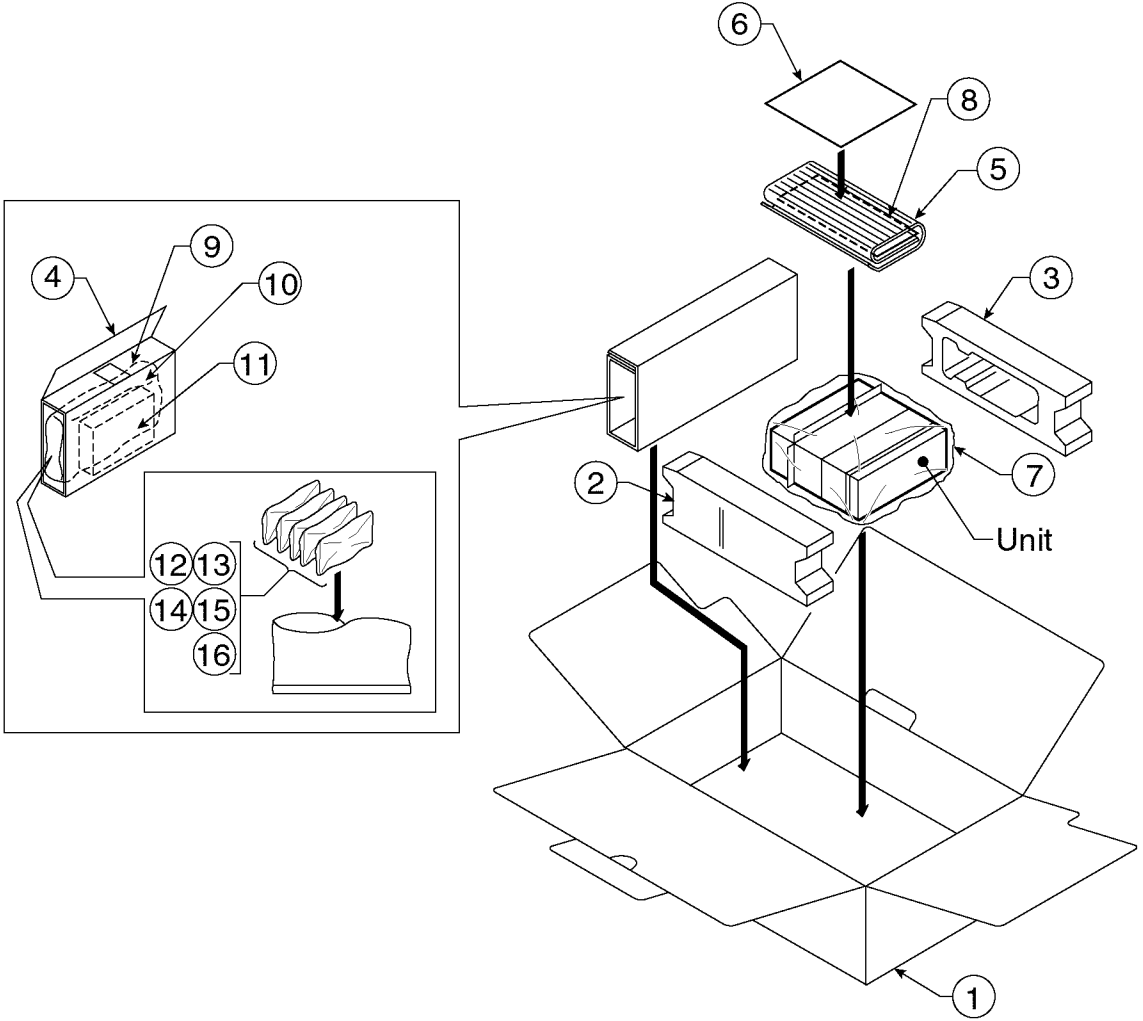
6
8
5
3
4
9
10
11
7
Unit
2
12
13
14
15
16
1

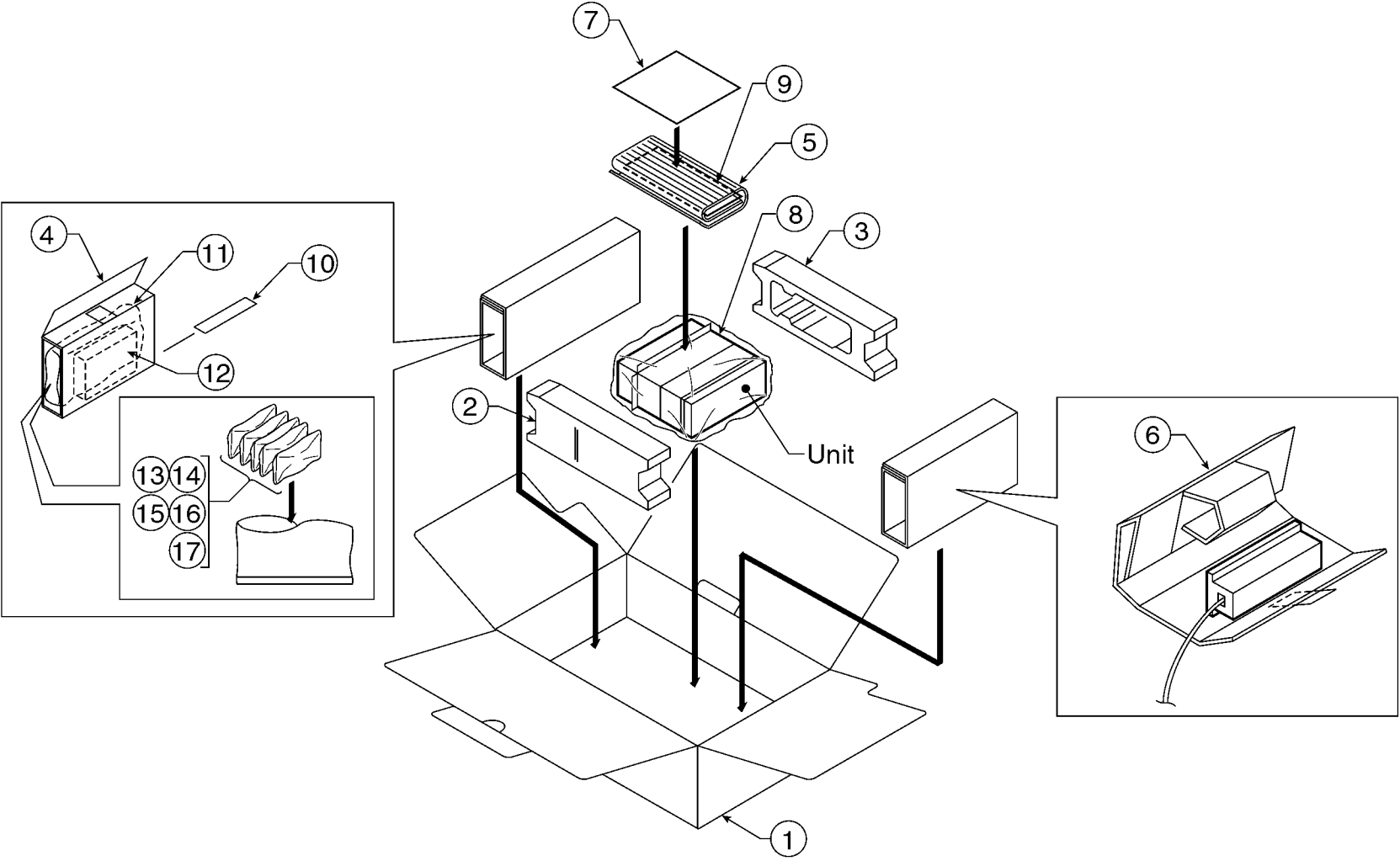
7
9
5
8
3
4
11
10
12
2
Unit
6
13
14
15
16
17
1

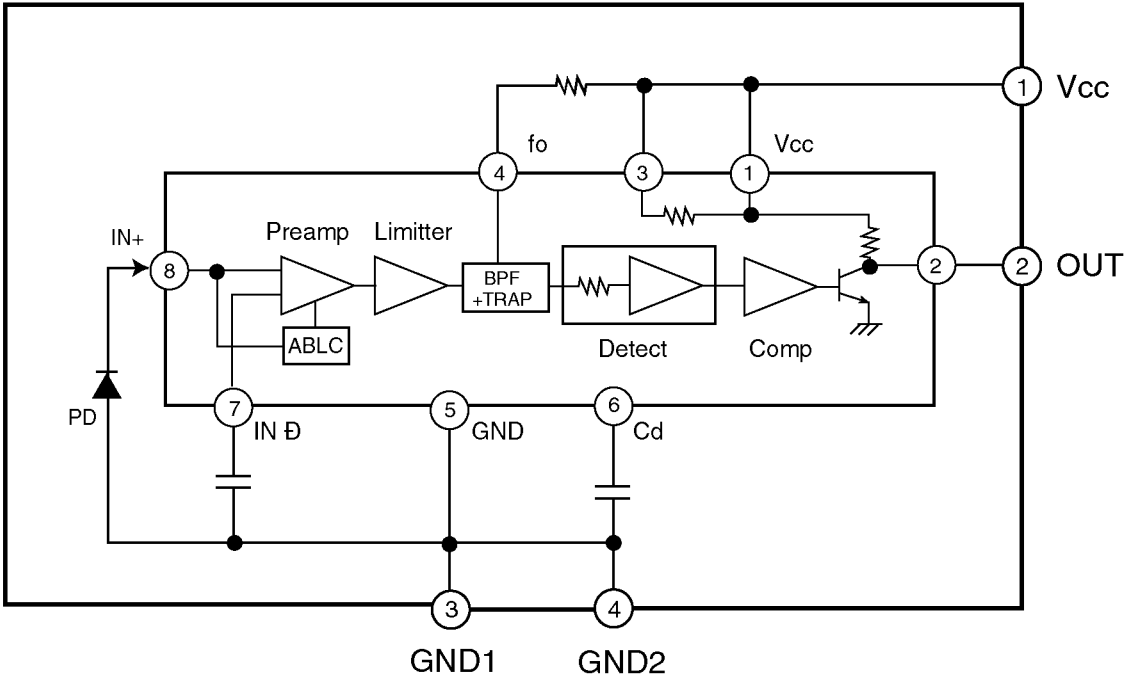
Vcc
1
fo
Vcc
4
3
1
IN+
8
Preamp
Limitter
BPF
+TRAP
2
2
OUT
ABLC
Detect
Comp
PD
7
IN Đ
5
GND
6
Cd
3
4
GND1
GND2

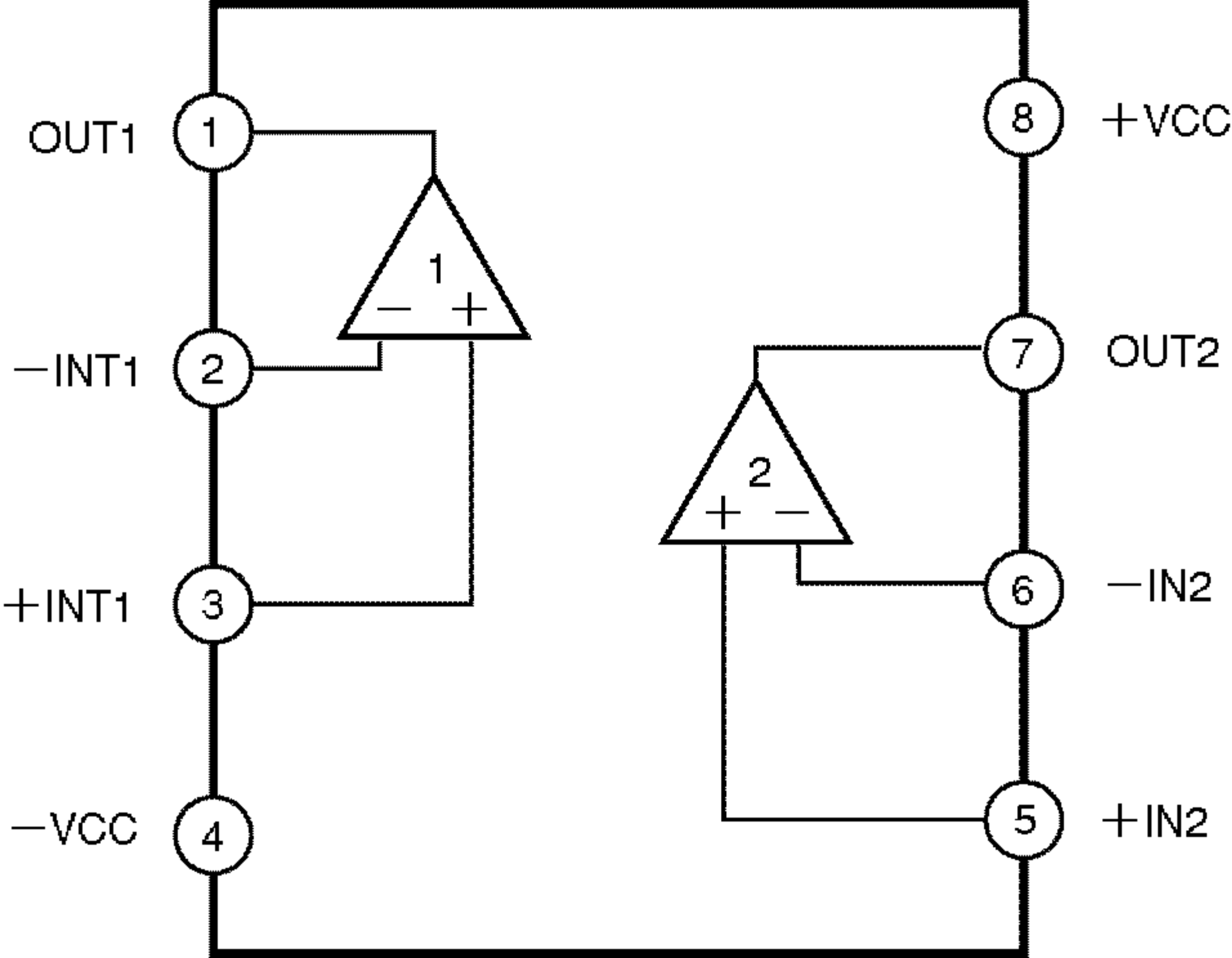
OUT1
1
−INT1
2
+INT1
3
−VCC
4
8
+VCC
7
OUT2
6
−IN2
5
+IN2
1
2

19.3. CD Servo Block

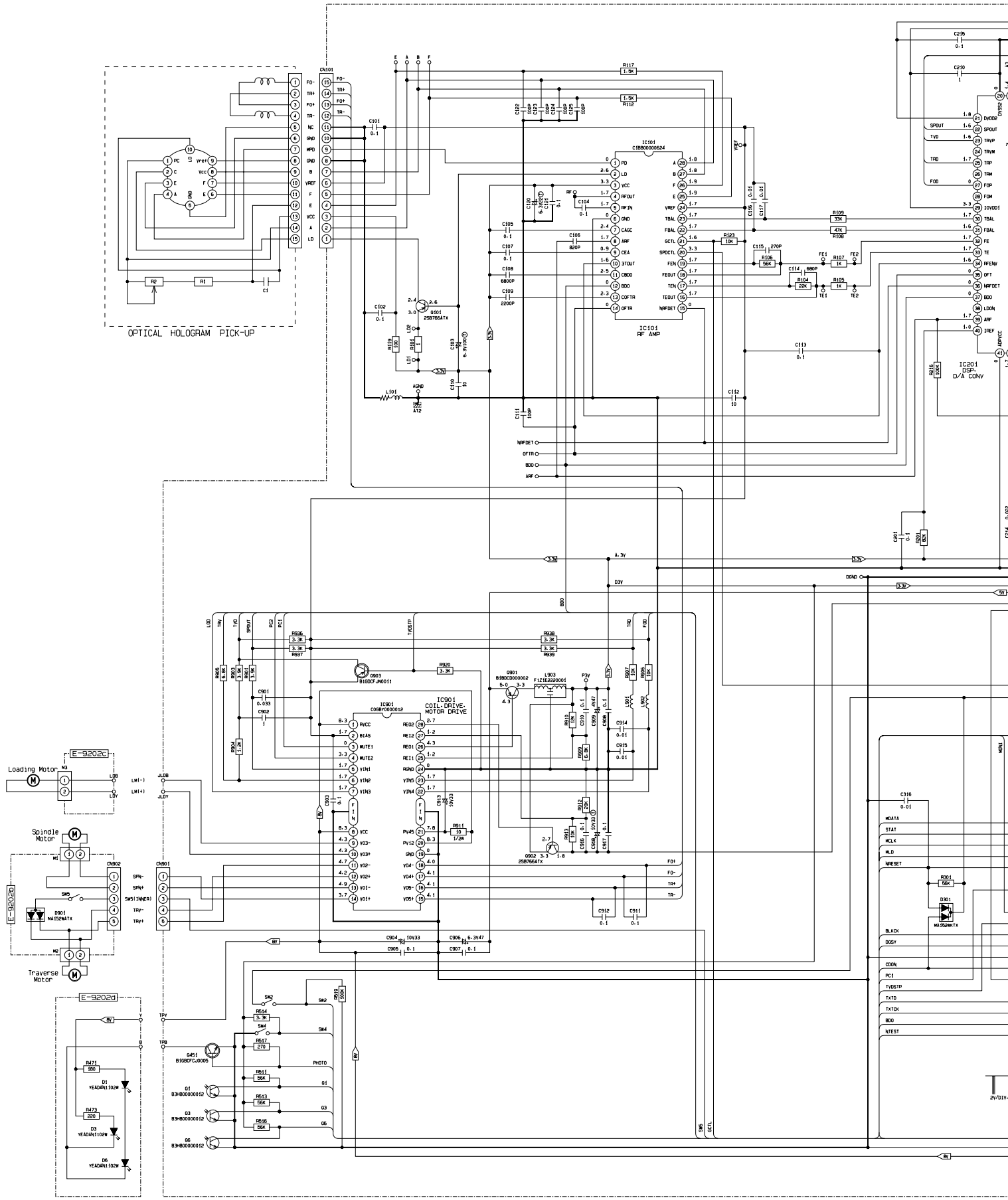

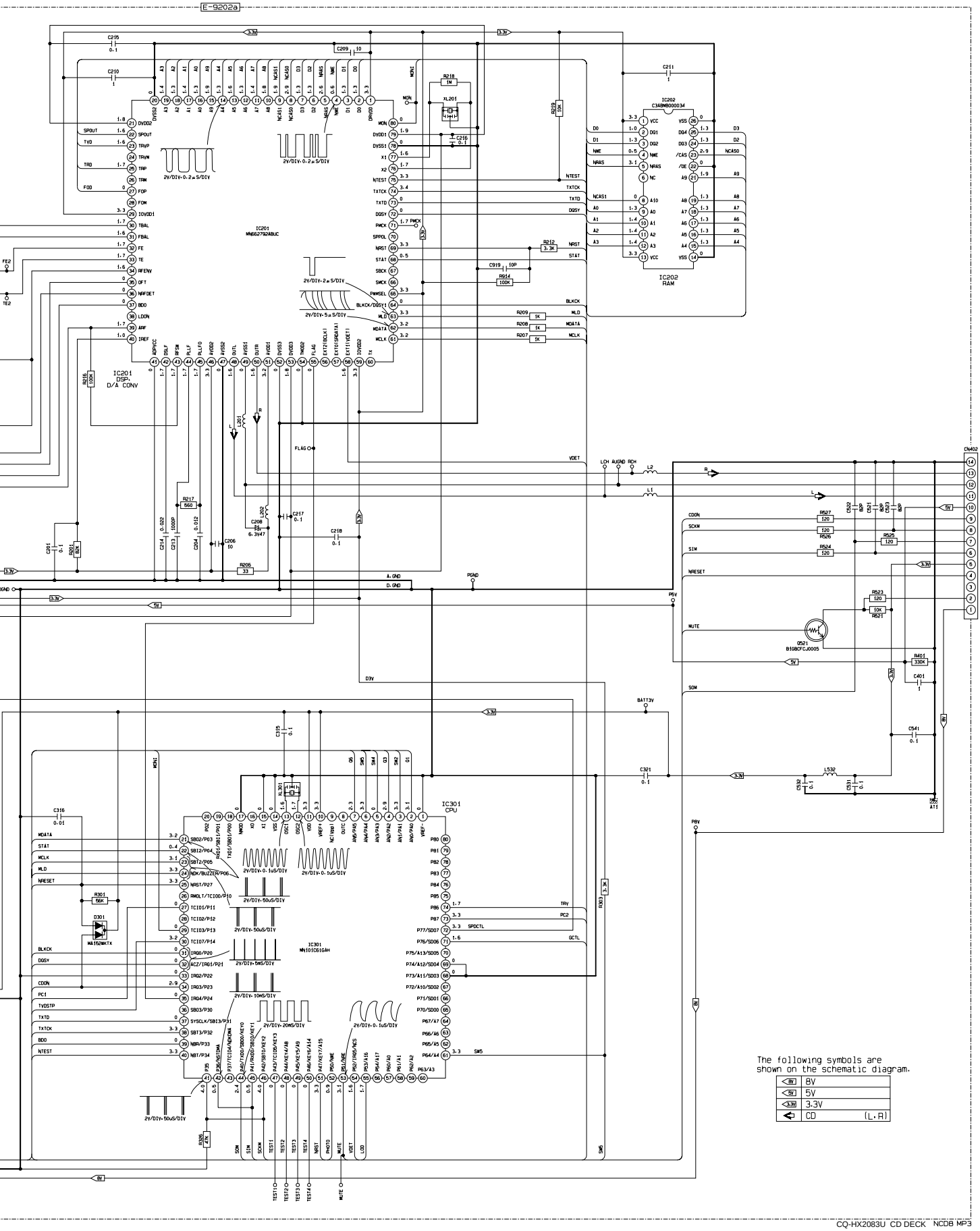

Printed in Japan (K) 2003. 3 (Recycled Paper)

19.2. Display Block

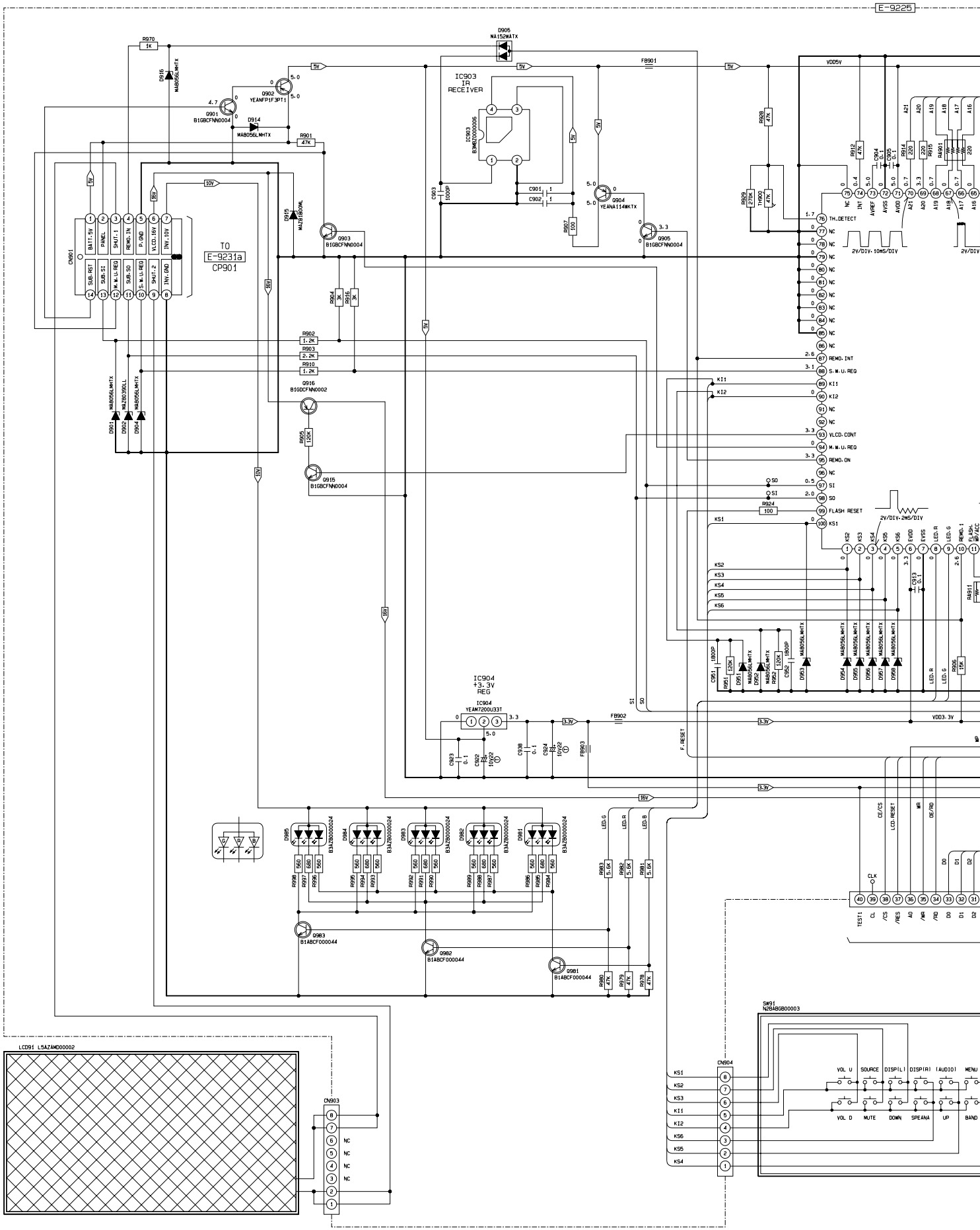

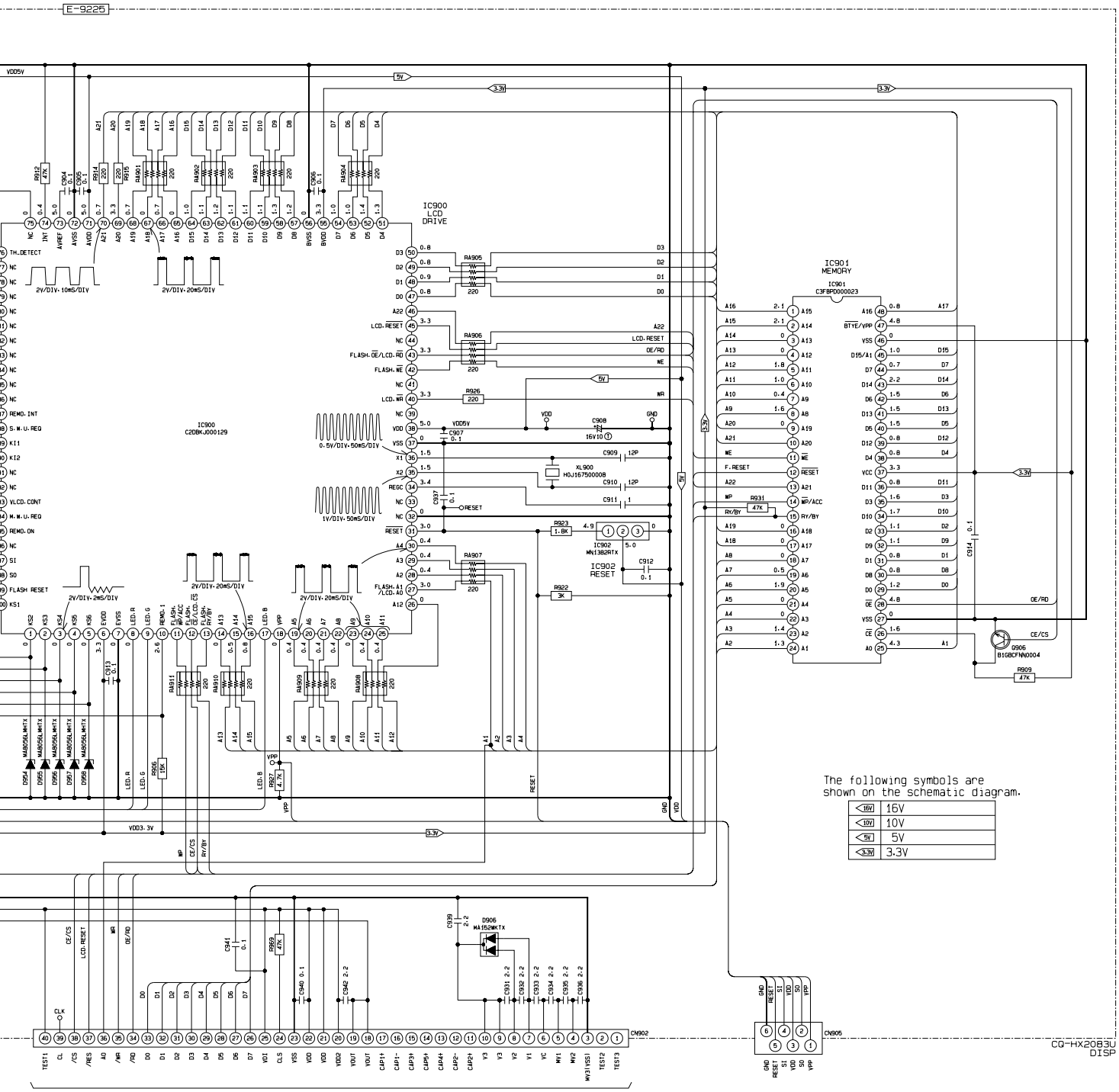
E-9225
IC900
LCD
DRIVE
IC900
C2DBKJ000129
IC901
MEMORY
IC901
C3FBP0000023
IC902
RESET
IC902
MN1382RTX
D906
B1GBCFN00004
The following symbols are
shown on the schematic diagram.
16V 16V
10V 10V
5V 5V
3.3V 3.3V
CN902
CN905
CQ-HX2083U
DISP

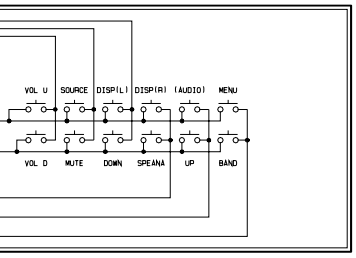
VOL U
SOURCE
DISP(L)
DISP(R)
(AUDIO)
MENU
VOL D
MUTE
DOWN
SPEANA
UP
BAND

19 SCHEMATIC DIAGRAM-2

19.1. Main Block

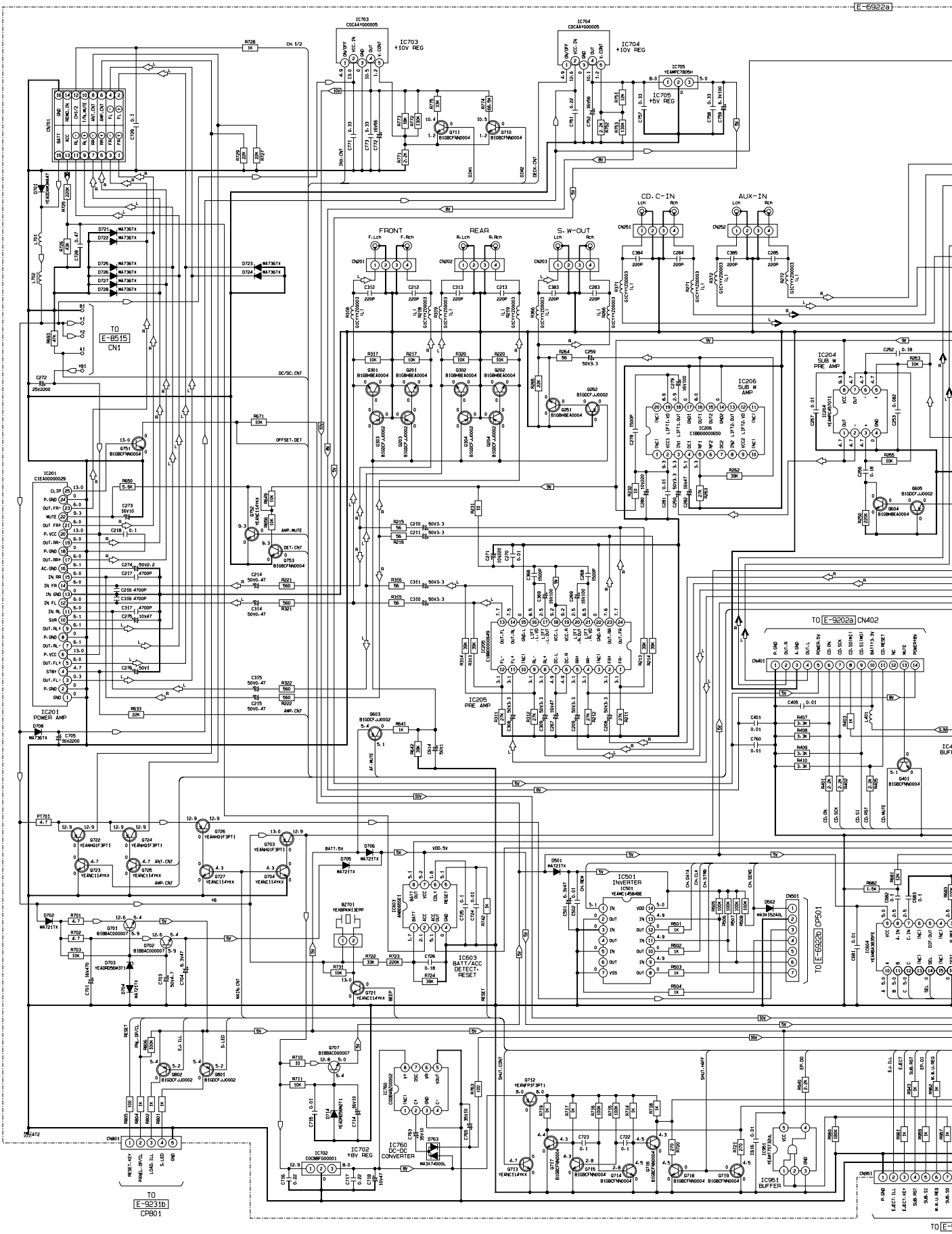

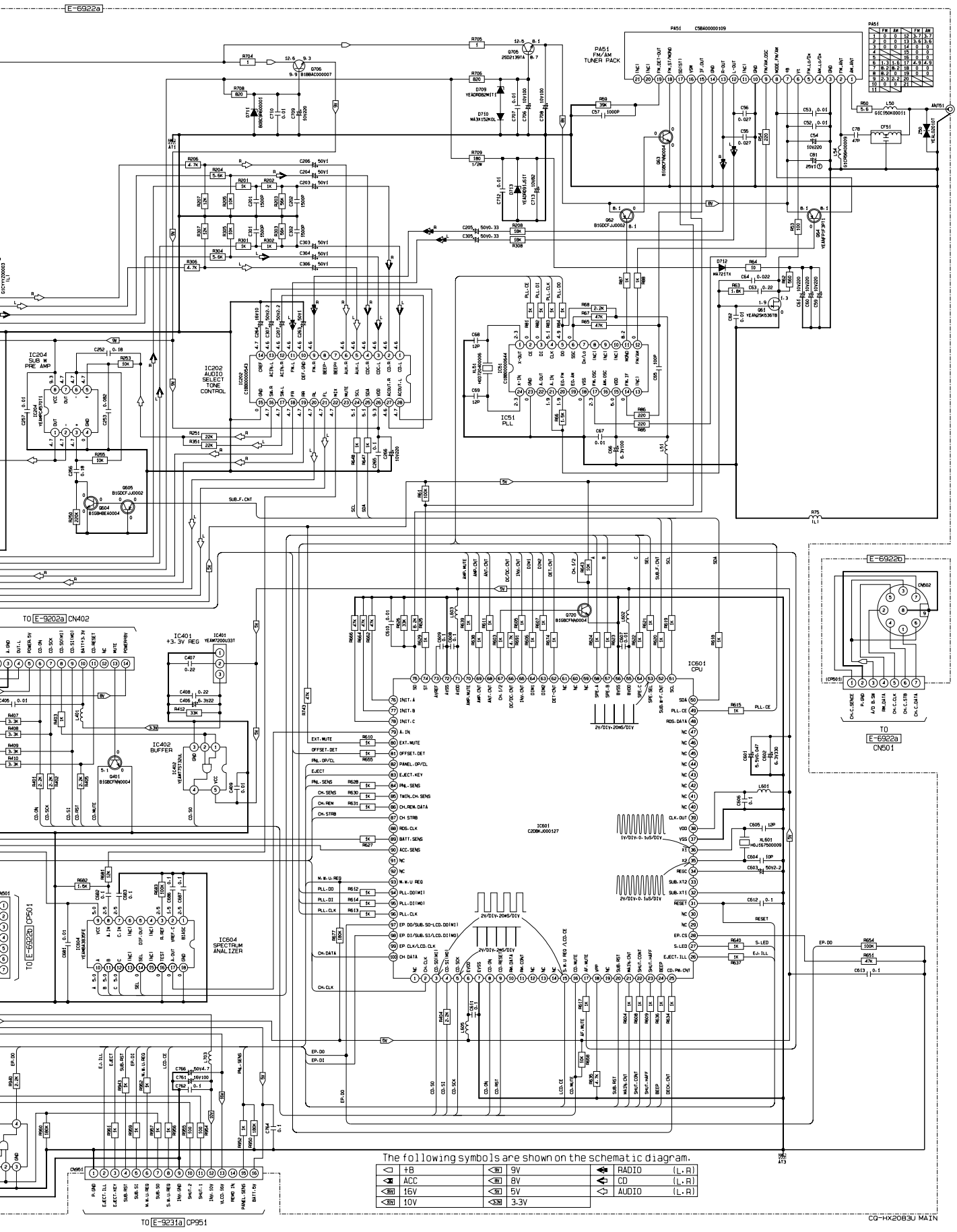
E-6922a
PA51
FM/AM
TUNER PACK
IC202
AUDIO
SELECT
TONE
CONTROL
IC204
SUB W
PRE AMP
IC51
PLL
IC401
+3.3V REG
IC402
BUFFER
IC601
CPU
IC504
SPECTRUM
ANALIZER
TO E-9202a CN402
TO E-6922b CP501
TO E-9231a CP951
E-6922b
CN502
TO
E-6922a
CN501
The following symbols are shown on the schematic diagram.
+B
ACC
16V
10V
9V
8V
5V
3.3V
RADIO (L,R)
CD (L,R)
AUDIO (L,R)
CQ-HX2083U MAIN

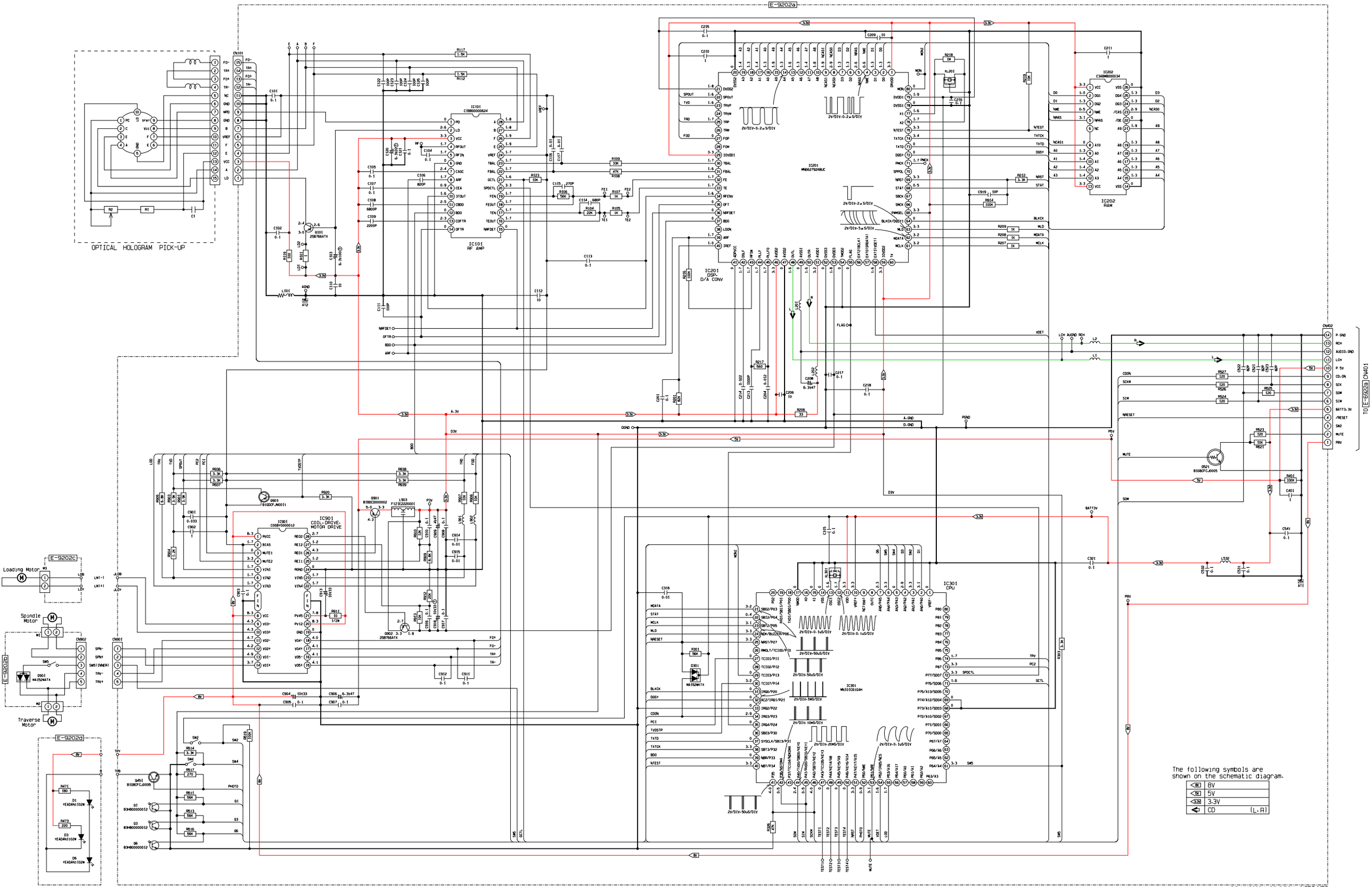

Printed in Japan (K) 2003. 3 (Recycled Paper)

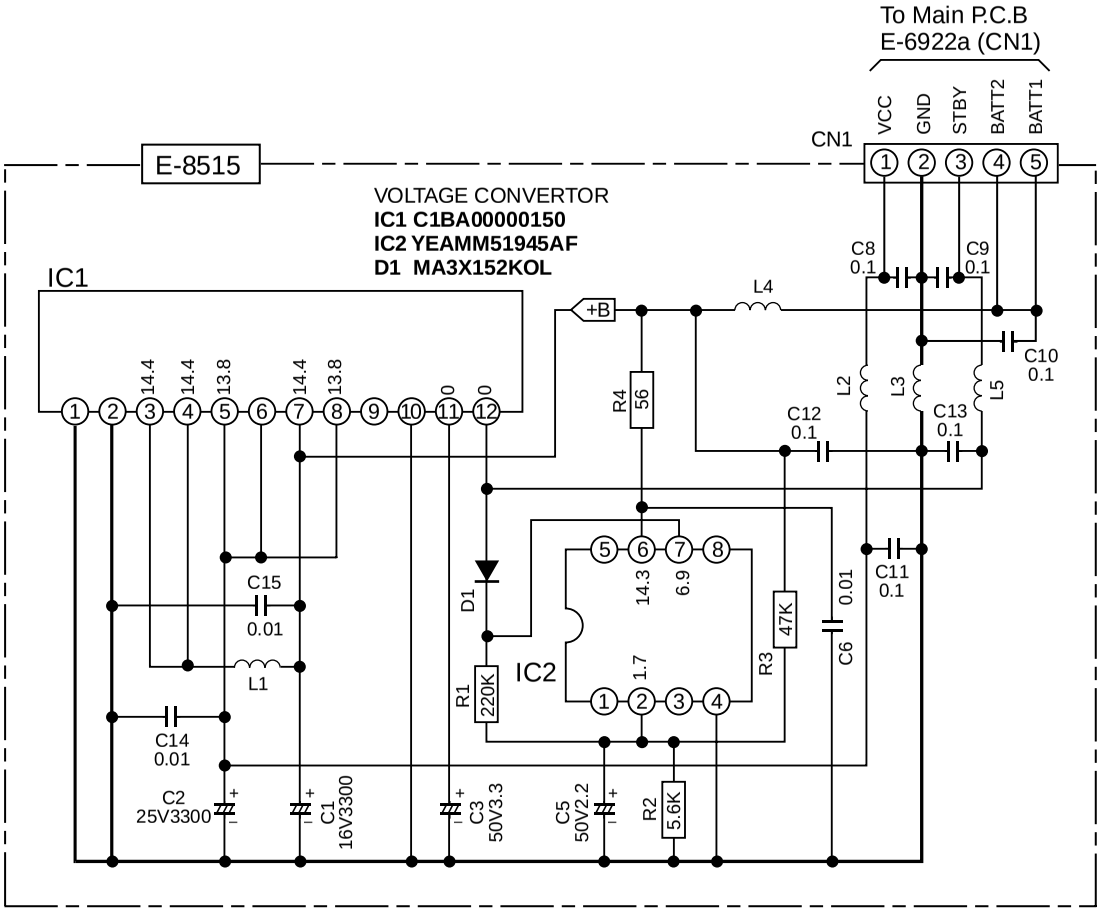

CQ-HX2083U DC-DC Block

The following symbols are shown on the schematic diagram.

16V	16V
10V	10V
5V	5V

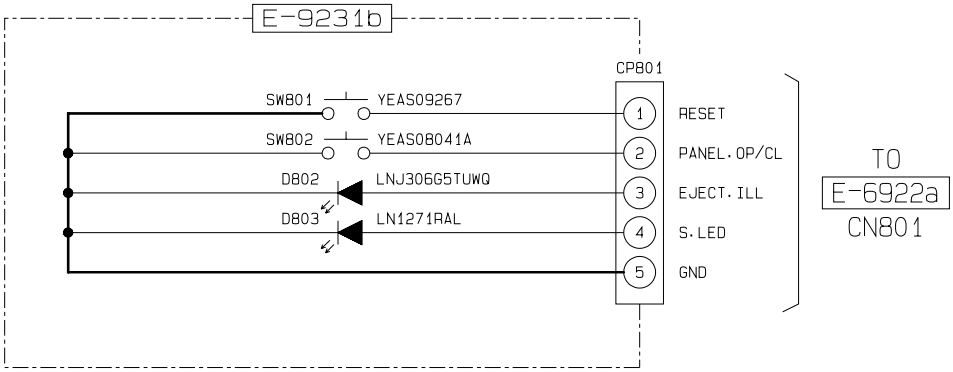

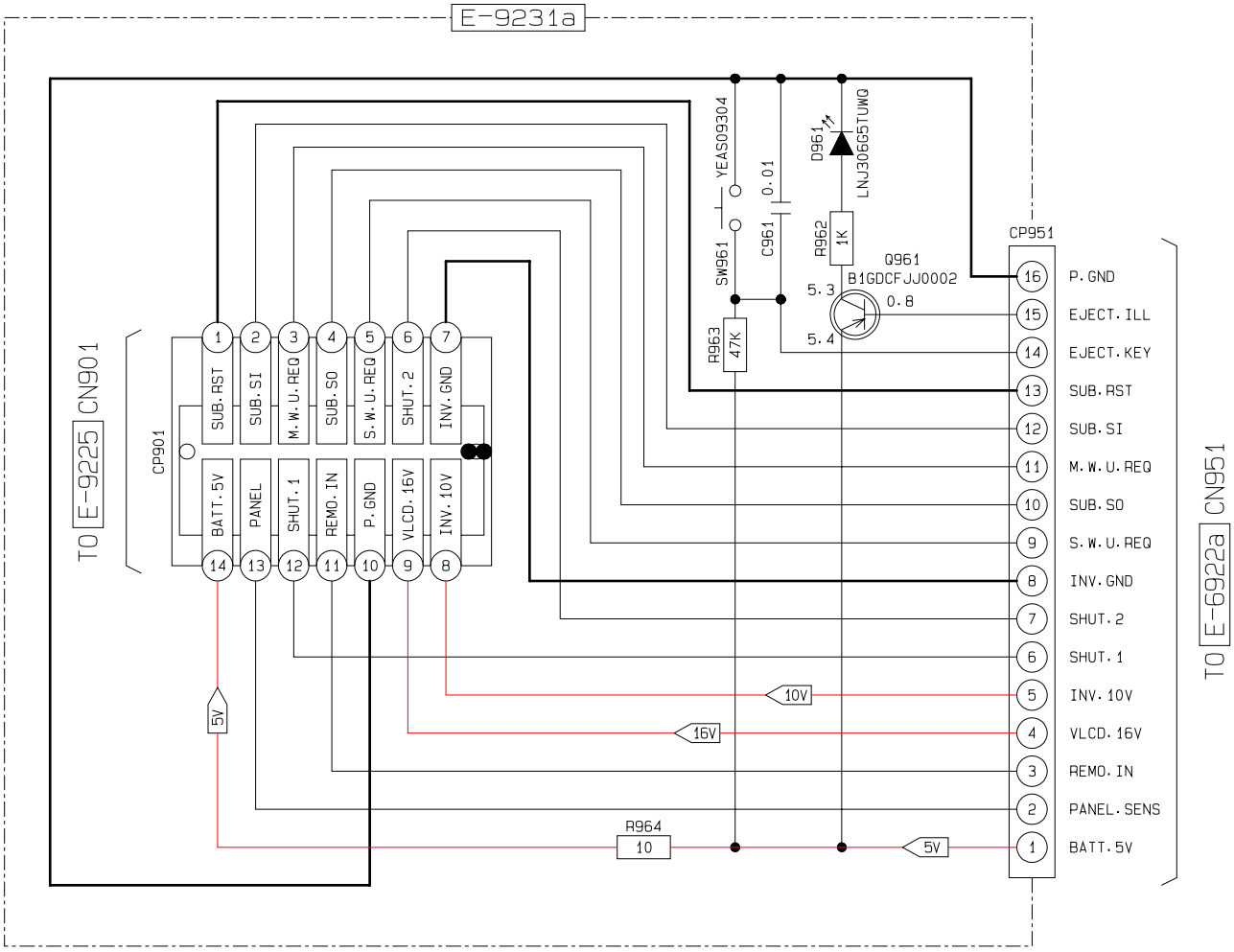

CQ-HX2083U
ESC

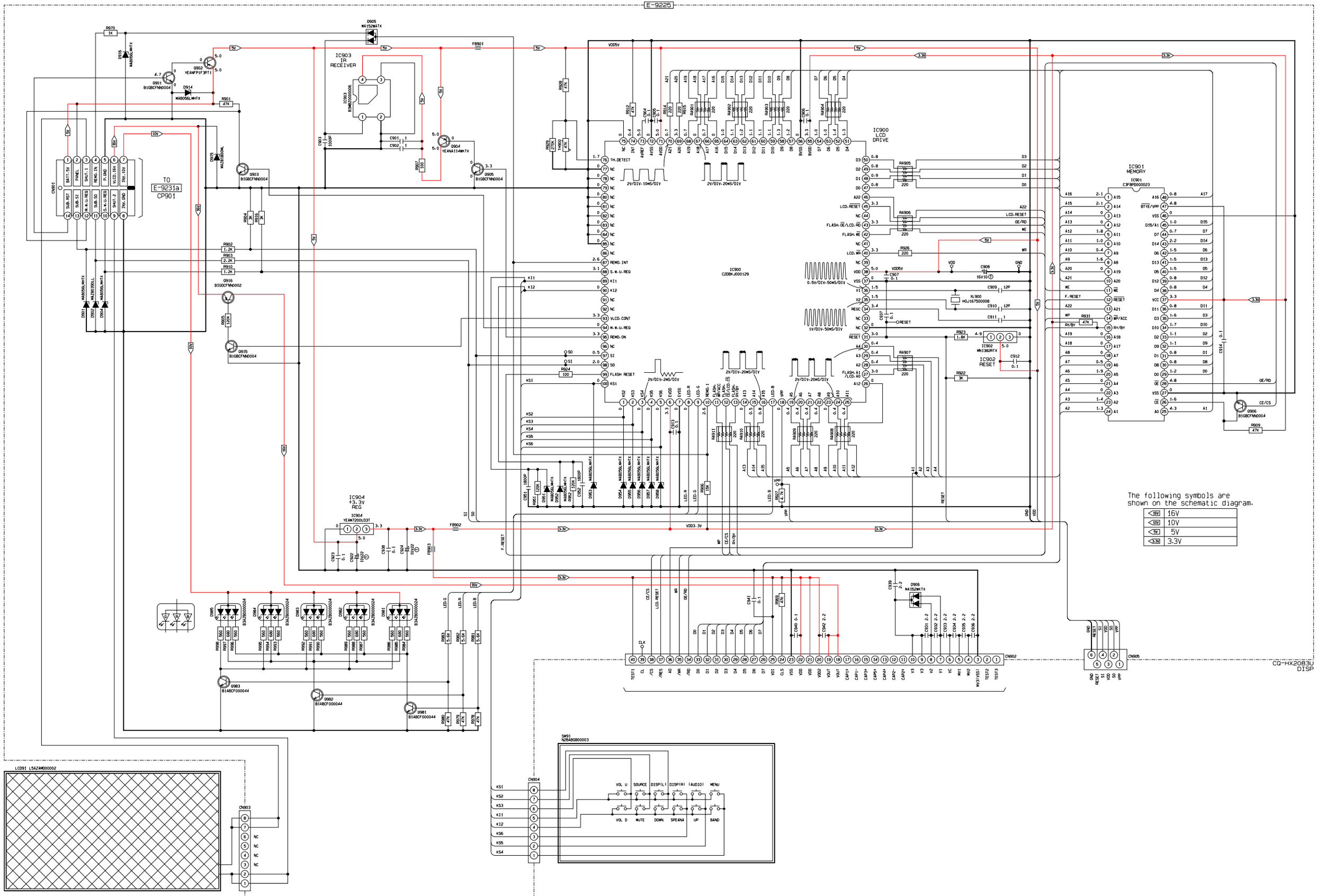
E-9225
IC903 IR RECEIVER
IC900 LCD DRIVE
IC900 C2DBKJ000129
IC901 MEMORY
IC901 C3FBP0000023
IC902 RESET
IC904 +3.3V REG
TO E-9231a CP901
CN901
CN902
CN903
CN904
CN905
SW91 N2BABGB00003
LCD91 L5AZAM000002
The following symbols are shown on the schematic diagram.
16V
10V
5V
3.3V
CQ-HX2083U DISP

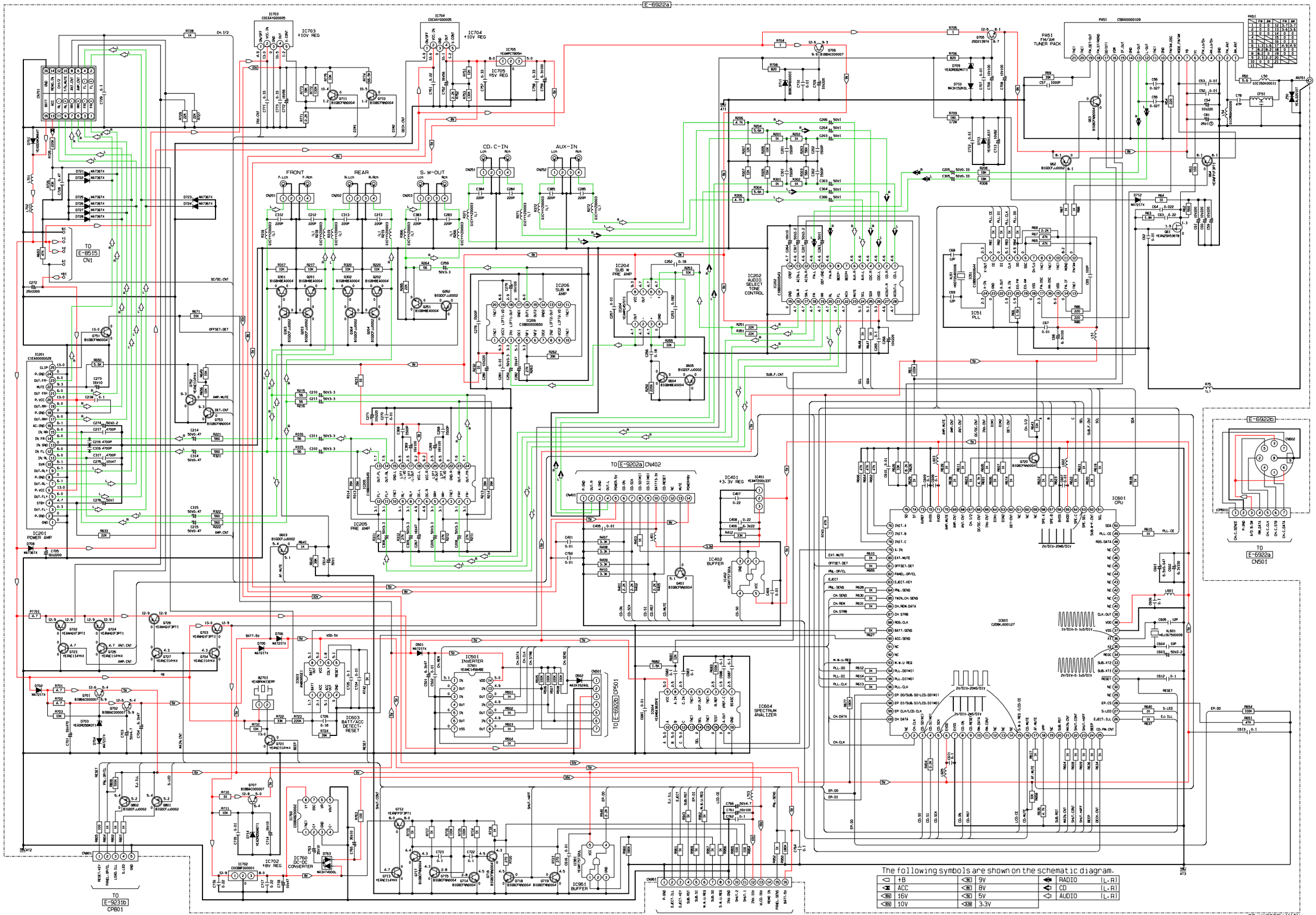
E-6922a
IC703 +10V REG
IC704 +10V REG
IC705 +5V REG
PA51 FM/AM TUNER PACK
CD.C-IN
AUX-IN
FRONT
REAR
S.W-OUT
TO E-8515 CN1
IC201 POWER AMP
IC202 AUDIO SELECT TONE CONTROL
IC204 SUB W PRE AMP
IC206 SUB W AMP
IC205 PRE AMP
IC401 +3.3V REG
IC402 BUFFER
IC601 CPU
IC501 INVERTER
IC603 BATT/ACC DETECT-RESET
IC604 SPECTRUM ANALIZER
IC760 DC-DC CONVERTER
IC702 +8V REG
IC951 BUFFER
IC51 PLL
TO E-9202a CN402
TO E-6922b CP501
TO E-6922a CN501
TO E-9231b CP801
TO E-9231a CP951
The following symbols are shown on the schematic diagram.
+B
ACC
16V
10V
9V
8V
5V
3.3V
RADIO (L,R)
CD (L,R)
AUDIO (L,R)
CQ-HX2083U MAIN

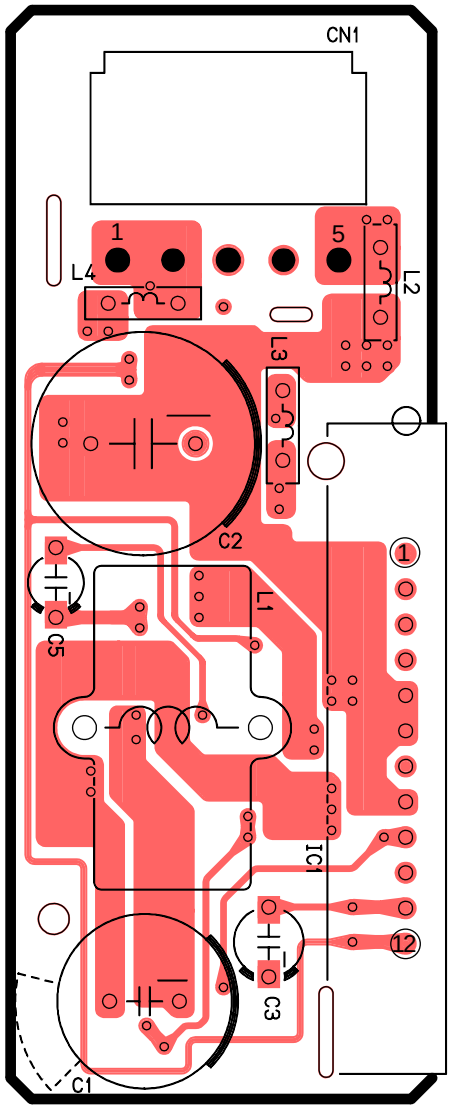

[E-8515][Top View]

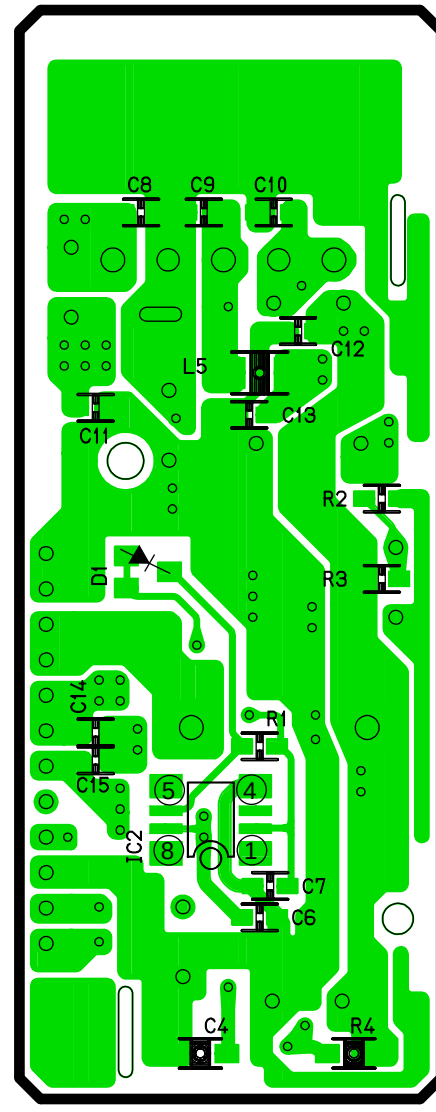

[E-8515][Bottom View]

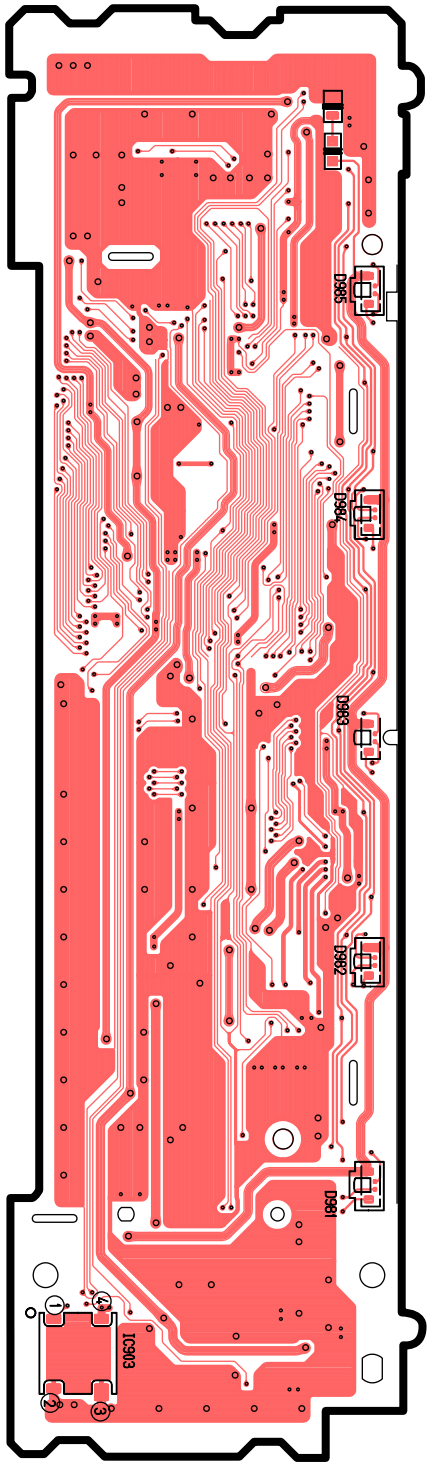

[E-9225][Top View]

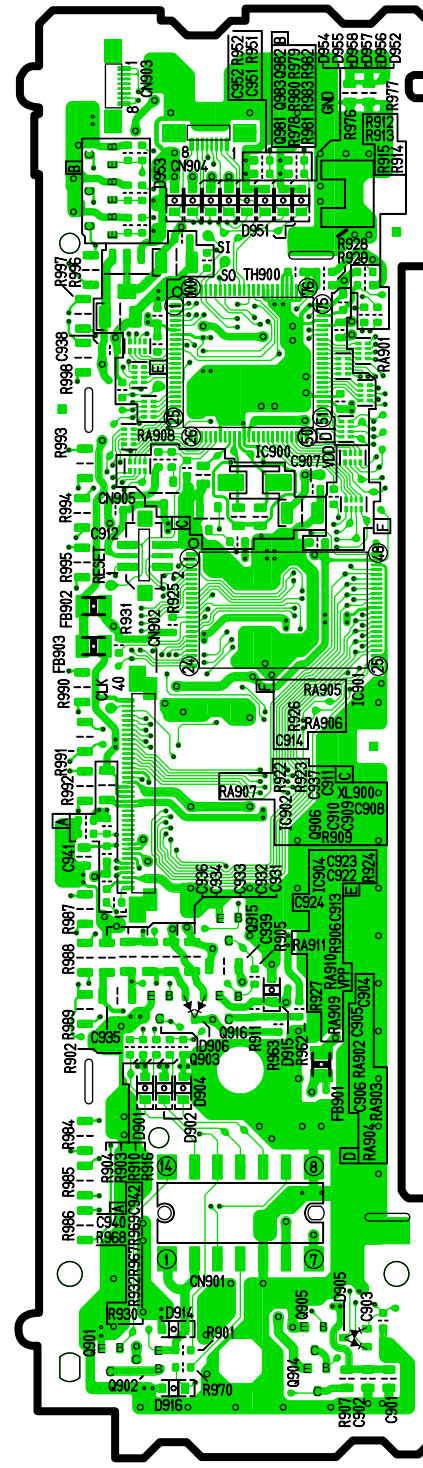

[E-9225][Bottom View]

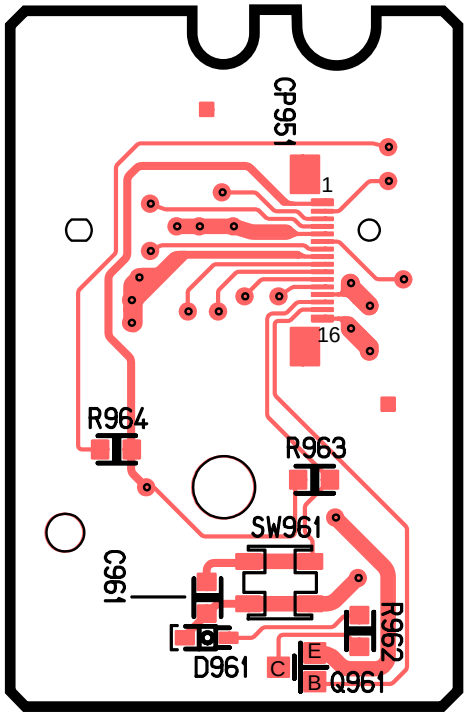

[E-9231a] [Top View]

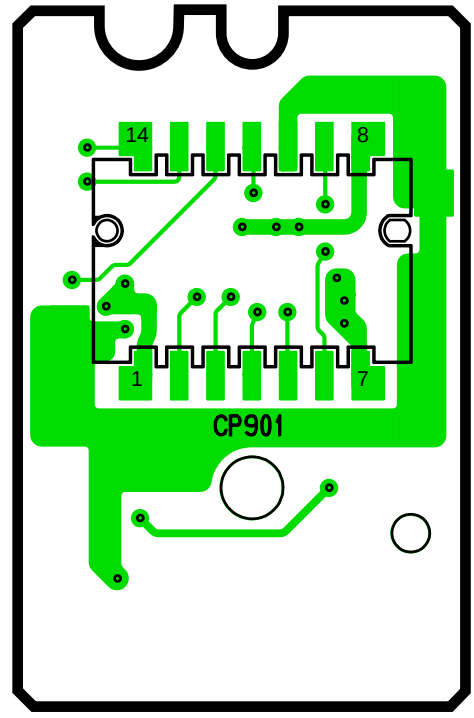

[E-9231a] [Bottom View]

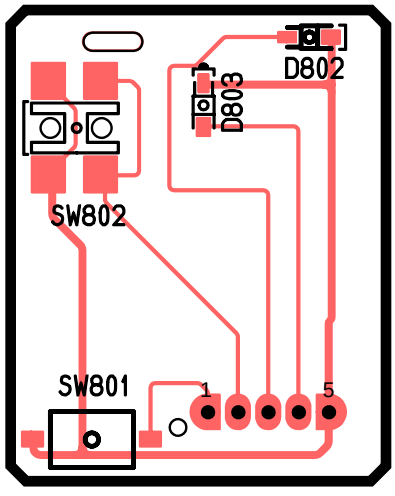

[E-9231b] [Top View]

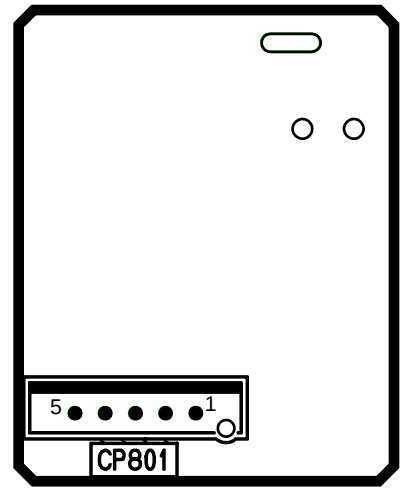

[E-9231b] [Bottom View]

[E-9202d] [Bottom View]

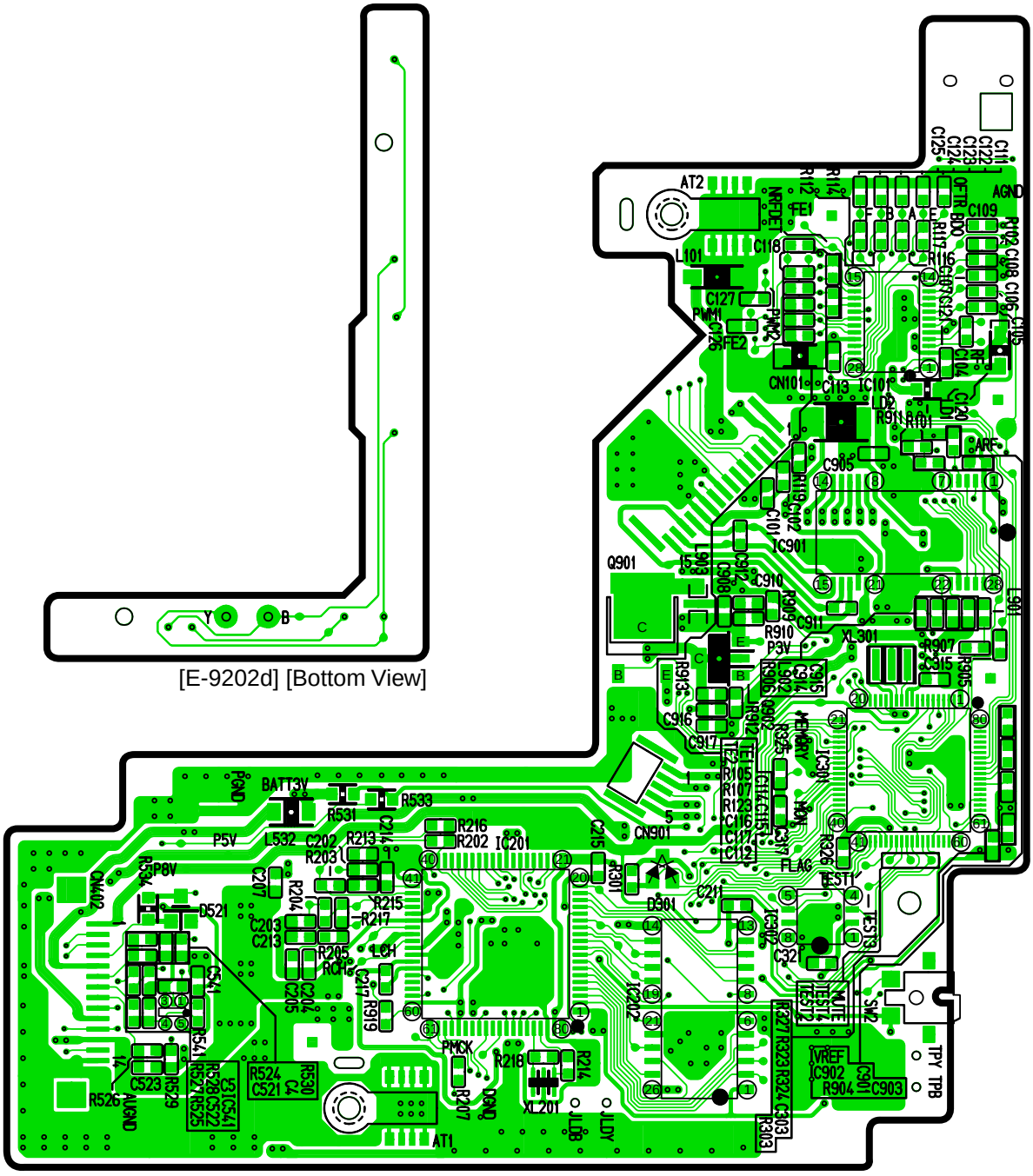

[E-9202a] [Bottom View]

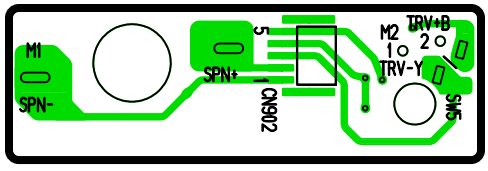

[E-9202b] [Bottom View]

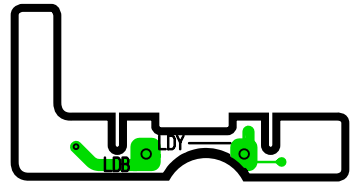

[E-9202c] [Bottom View]

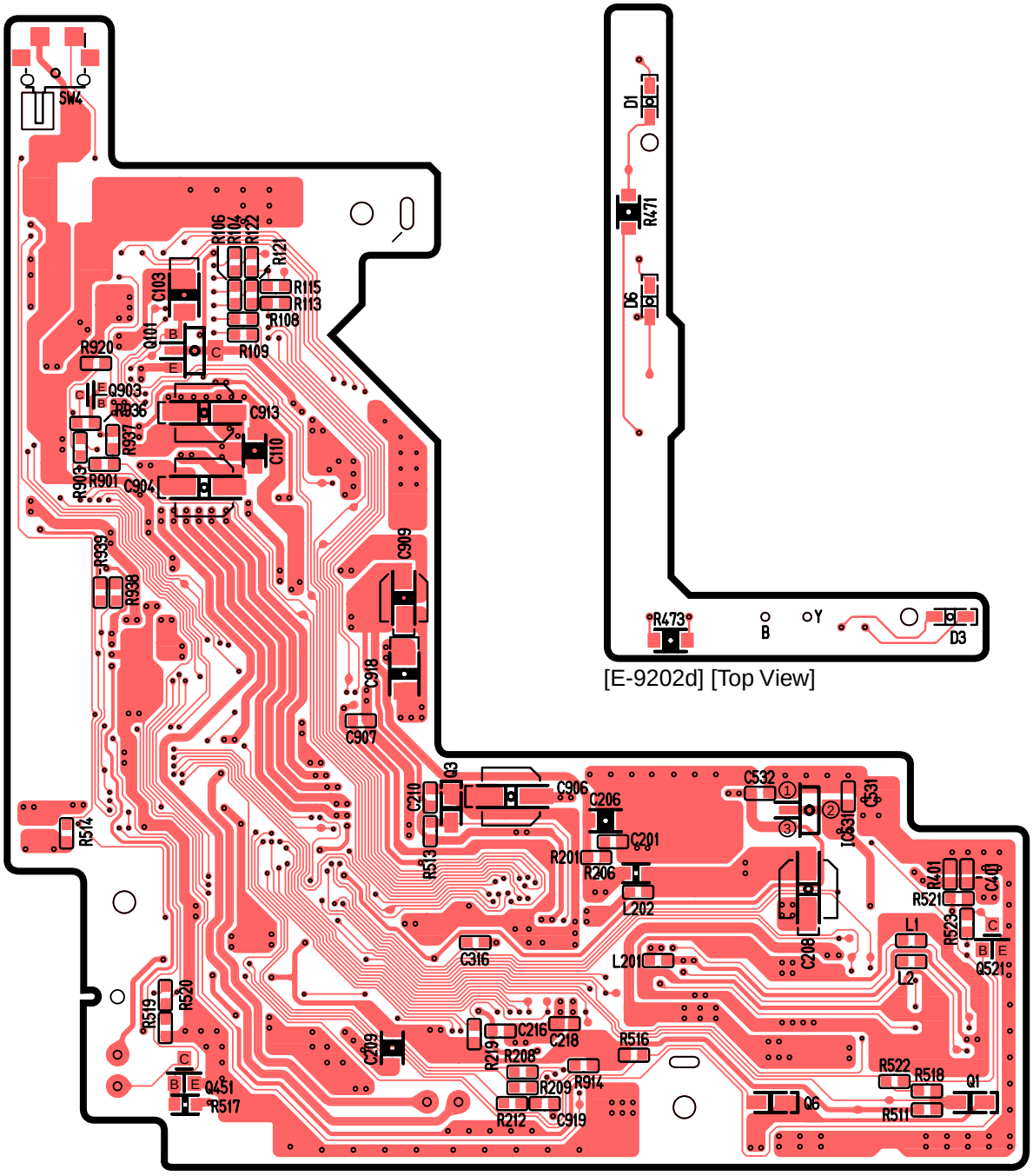

[E-9202d] [Top View]

[E-9202a] [Top View]

[E-9202c] [Top View]

[E-9202b] [Top View]

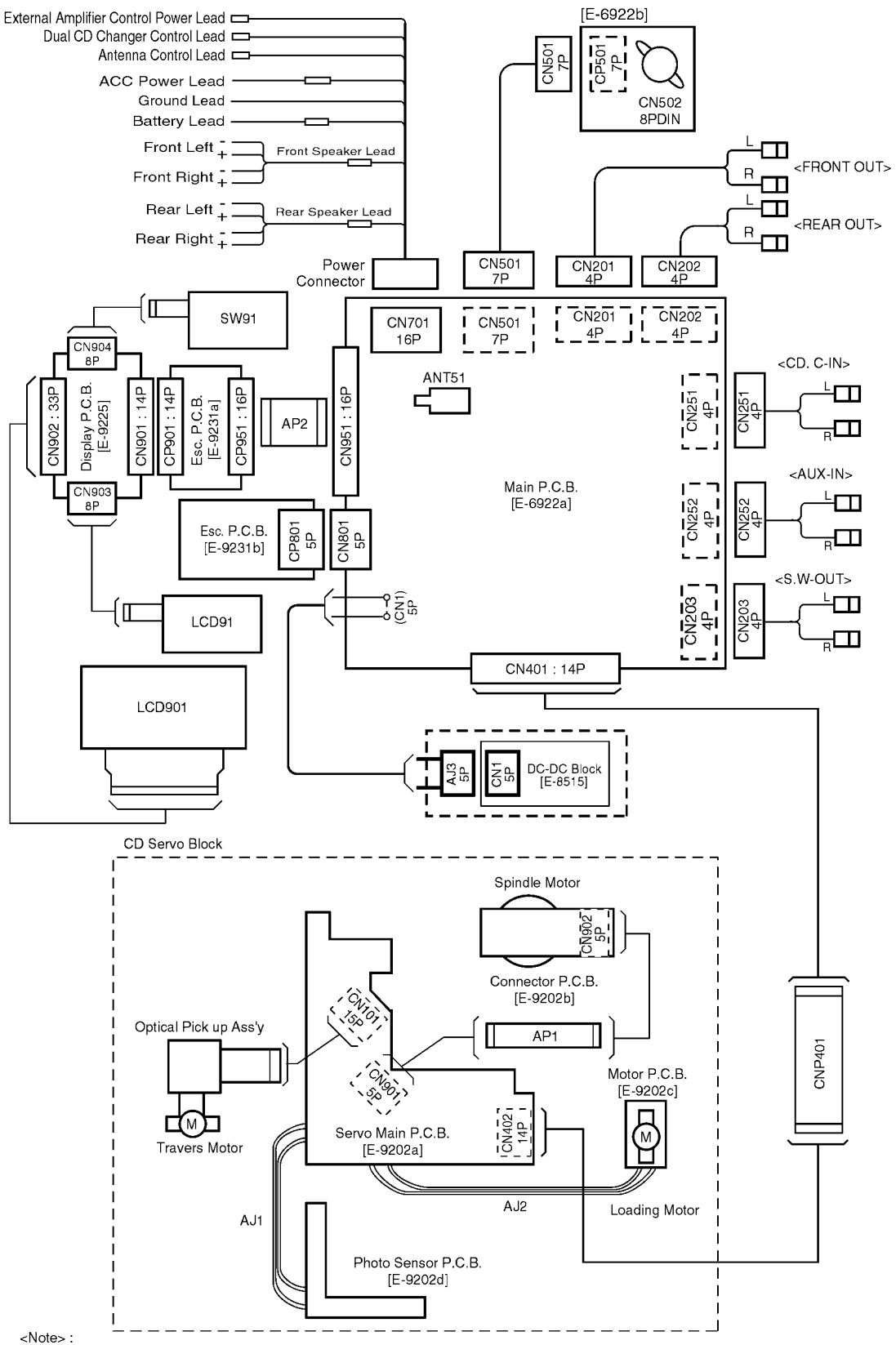

<Note> :

▭ ·····This mark shows a Ref. No. of connector

- - ·····This mark shows a mounting position of connector.

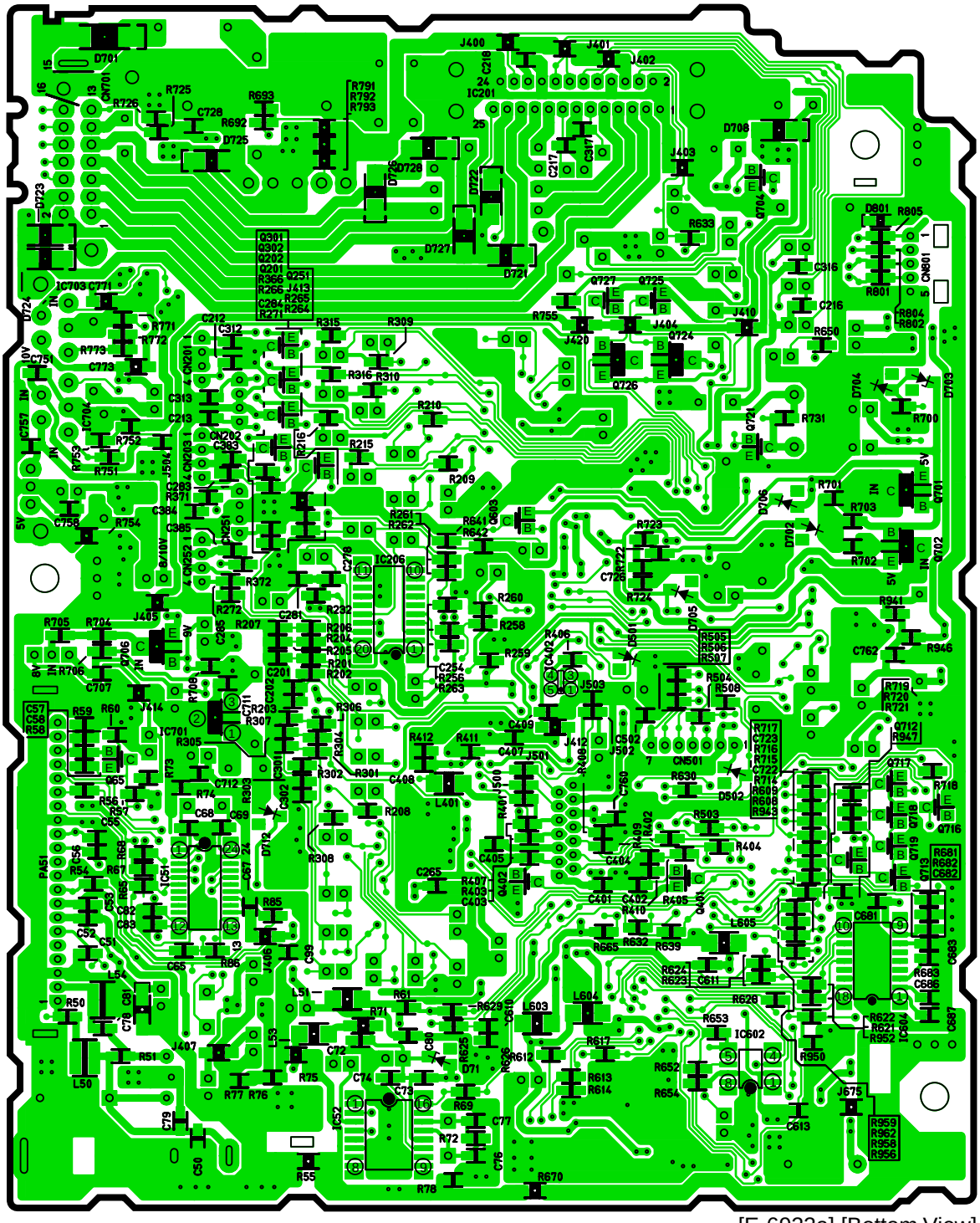

[E-6922a] [Bottom View]

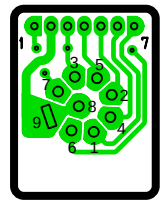

[E-6922b]
[Bottom View]

[E-6922a] [Top View]

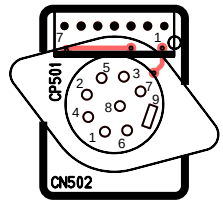

[E-6922b]
[Top View]

CQ-HX2083U MAIN P.C.B