RADIO CORPORATION PTY. LTD.
DIVISION OF ELECTRONIC INDUSTRIES LTD.
126-130 GRANT STREET, SOUTH MELBOURNE, S.C.4.

TECHNICAL BULLETIN

Bulletin: HPN-4
File: RECEIVERS PORTABLE
Date: 11-3-59

TRANSISTOR ELECTRICAL ALTERNATIVES

The transistor complement detailed below is additional to the transistor complements listed in paragraphs 1, 2, 3, and 4 on page 2 of service bulletin HPN-2

All Raytheon brand transistors were used except in the driver stage where a S.T.C. brand transistor was used.

The circuit and electrical components are as "HPN" circuit diagram No. PB917 shown in service bulletin HPN-1

Converter	2N486	Raytheon	
1st IF.	2N484	"	
2nd IF.	2N484	"	
1st Audio	2N362	"	
Driver	TS2	S.T.C.	
Output	2N632	Raytheon	Matched pair
Output	2N632	"	Matched pair

MODIFICATIONS TO ALLOW ADDITIONAL TRANSISTOR COMPLEMENTS OTHER THAN SPECIFIED IN SERVICE BULLETIN HPN-2

The modifications detailed below apply to the circuit diagram No. PB917 in service bulletin HPN-1 page 2
The new circuit No. PB980 attached to this bulletin incorporates the modifications.

(A) Circuit No. 14. 150K. ohm resistor changed to a 39K. ohm ± 10% ½W resistor part No. R3932.

(B) Circuit No. 24. new component 6.8K. ohm ± 10% ½W resistor part No. R6822 connected between the base of 1st audio driver transistor and chassis.

(C) Circuit No. 15. 10 ohm resistor changed to a 1000 Ohm ± 10% ½W resistor part No.R1022

(D) Circuit No. 45. new component 50 MF - 10% + 250% 3VW electrolytic condenser part No. C307 connected in parallel with circuit No. 15.

(E)	Circuit No. 16	10K ohm resistor changed to a 6.8K ohm ± 10% ½W resistor part No. R6822
(F)	Circuit No. 17	270K ohm resistor is deleted.
(G)	Circuit No. 25.	new component 22K. ohm ± 10% ½W resistor part No. R2232 connected between the decoupled negative battery line and the base of the 2nd audio driver transistor
(H)	Circuit No. 49.	new component 4.7K ohm ± 10% ½W resistor part No. R4722 connected between the base of the 2nd audio driver transistor and chassis.
(I)	Circuit No. 18	10 Ohm resistor changed to a 1.5K ohm ± 10% ½W resistor part No.R1522
(J)	Circuit No. 46	new component 50 MF - 10% + 250% 3VW electrolytic condenser part No. C307 connected in parallel with circuit No. 18.

TRANSISTOR ELECTRICAL ALTERNATIVES USED WITH MODIFIED CIRCUIT NO. PB980

The electrical alternative transistor complements shown in service bulletin HPN-2 page 2 also apply to the new circuit No. PB980

1.	Converter	2N486	Raytheon	
	1st IF.	2N484	"	
	2nd IF.	2N484	"	
	1st Audio	TS3	S.T.C.	
	Driver	TS2	"	
	Output	2N185	"	Matched pair
	Output	2N185	"	
2.	Converter	2N486	Raytheon	
	1st IF.	2N308	S.T.C.	
	2nd IF.	2N309	"	
	1st Audio	TS3	"	
	Driver	TS2	"	
	Output	2N185	"	Matched pair
	Output	2N185	"	
3.	Converter	2N486	Raytheon	
	1st IF.	2N308	S.T.C.	
	2nd IF.	2N309	"	
	1st Audio	TS2	"	
	Driver	TS2	"	
	Output	2N185	"	Matched pair
	Output	2N185	"	

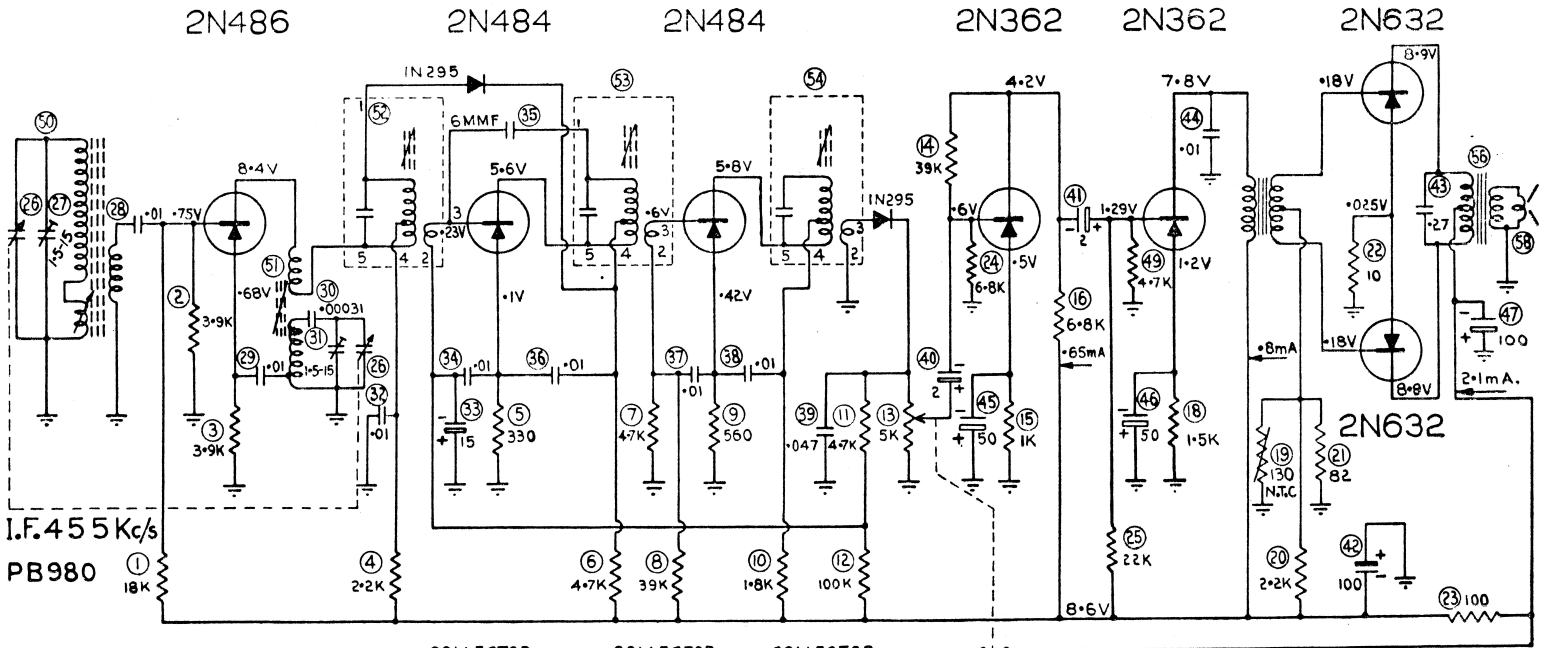

FUNCTION	RAYTHEON
CONVERTER	2N486
1ST I.F. AMP.	2N484
2ND I.F. AMP.	2N484
1ST AUDIO DVR	2N362
2ND AUDIO DVR	2N362
PUSH-PULL OUTPUT	(2N632 / 2N632) MATCHED PAIR

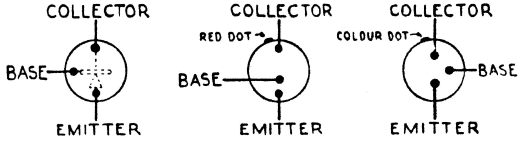

[RAYTHEON] [PHILIPS] [S.T.C]

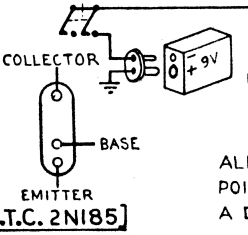

[S.T.C. 2N185]

DIODE ELECTRICAL ALTERNATIVES

FUNCTION	RAYTHEON	PHILIPS
A.V.C.	IN295	OA79
DETECTOR	IN 295	OA79

ALL VOLTAGES MEASURED BETWEEN POINTS INDICATED AND CHASSIS WITH A D.C. VACUUM TUBE VOLTMETER.

MODEL HPN. ISSUE 2

CORRECTION TO BULLETIN HPN-3

The 100 MF electrolytic condenser detailed in paragraph "b" as part No. C294 should be part No. C284.