ECLIPSE RADIO PTY. LTD.
(A DIVISION OF ELECTRONIC INDUSTRIES LTD.)
11-21 STURT STREET, SOUTH MELBOURNE

TECHNICAL BULLETIN

MONARCH RADIO

Bulletin : "HN-1" **File : Receivers A.C.** **Date : 18/2/49**

Subject – Model 'HN'

4 Tube Superheterodyne Broadcast Receiver

Consolette Model.

For operation from:-
200-260 volt A.C. Mains.

This Bulletin contains:-

1. Technical Specifications.
2. General Description.
3. Circuit Diagram.
4. Voltage Table.
5. Alignment Instructions.
6. Component Parts List.
7. Coil and I.F. Transformer Connections.

Bulletin: "HN-1" **File: Receivers A.C.** **Date: 18/2/49**

Subject – Technical Specifications – Receiver Type 'HN'

Tube Complement:–

Type 6A8G Converter.
Type 6B8G I.F. Amplifier A.V.C. Detector, 1st Audio.
Type 6V6GT/G Beam Power Amplifier.
Type 5Y3GT/G Full Wave Rectifier.

Intermediate Frequency:–

455 Kc/s.

Tuning Range:–

535 Kc/s – 1640 Kc/s.
565 Metres – 182.9 Metres.

Dial Reading:–

Straight line frequency calibration.

Power Consumption:–

50 watts (Approx.).

General Description:–

The Model 'HN' receiver is a 4-tube Broadcast Superheterodyne designed for operation from 200-250 volt, 50 cycle A.C. Mains, and when a suitable transformer is fitted (see parts list), from the 200-260 volt 40 cycle A.C. Mains.

A built-in antenna, closely matching the antenna transformer is incorporated for local reception and a socket is provided for connection of an external antenna if conditions require its use.

The receiver is a reflexed superheterodyne employing inverse feedback to eliminate minimum volume effect which is a usual disadvantage of reflexed receivers, and to provide bass and treble compensation at low listening levels. All other advantages of inverse feedback, such as reduction of hum and distortion are obtained.

Automatic gain control is applied to the converter tube only, and volume is controlled by varying the audio signal applied to the grid of the 6B8G valve. Audio output from this tube is fed directly to the 6V6GT power output tube.

Moulded bakelite and steel are combined to provide an attractive and serviceable cabinet at low cost. Access is gained to the receiver by removing the rear cover, and all except major service may be carried out without removing the chassis.

Bulletin : "HN-1" **File : Receivers A.C.** **Date : 18/2/49**

Subject – Circuit Diagram – Receiver Type 'HN'

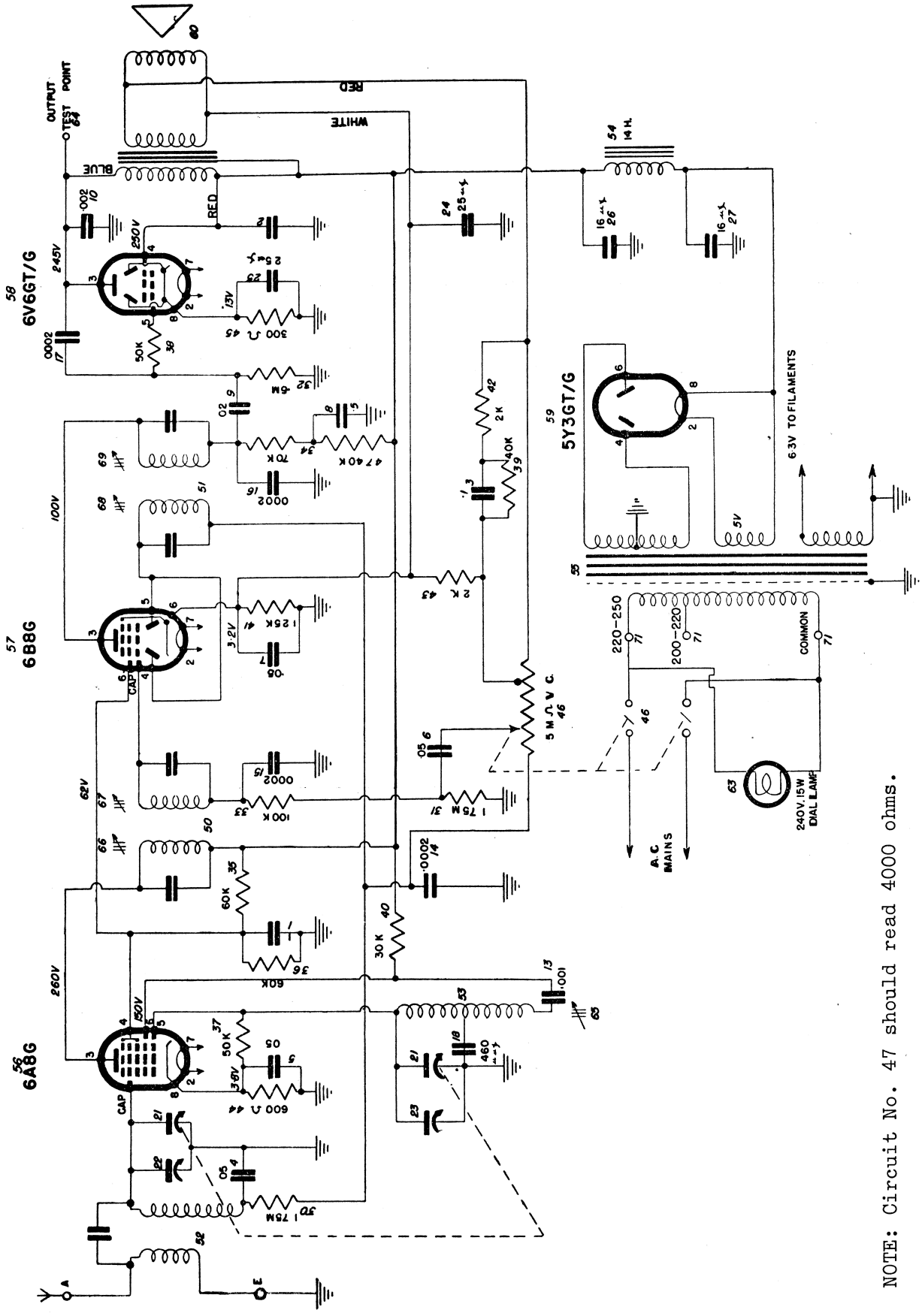

NOTE: Circuit No. 47 should read 4000 ohms.

Subject – Alignment Instructions – Receiver Type 'HN'

Equipment:–

Signal Generator.
Output Meter.
Alignment Tool PM581.
Dummy Antenna 200 MMFD.
I.F. Dummy .01MFD.

Alignment Conditions:–

Load Impedance	5000 Ohms.
Output Level.	50 milliwatts.
Volume Control.	Full on (Clockwise).

Procedure:–

Set the dial pointer to the right hand margin of the dial scale, with the gang condenser plates fully meshed.

Operations	Generator Connections	Generator Frequency	Dummy Capacitor	Instructions
1.	To grid of 6B8G Tube	455 Kc/s.	.01 MFD Mica in series with generator lead	Leave grid cap on. Peak 2nd I.F. transformer primary and secondary
2.	To grid of 6A8G Tube	455 Kc/s.	.01 MFD Mica in series with generator lead	Gang condenser plates full out. Leave grid cap on. Peak 1st I.F. transformer primary and secondary
3.	To antenna lead	600 Kc/s.	200 MMFD Mica in series with generator lead	Turn dial pointer to 600 Kc/s. Peak the oscl. coil inductance trimmer (iron core for Max. output)
4.	To antenna lead	1400 Kc/s.	200 MMFD Mica in series with generator lead	Turn dial pointer to 1400 Kc/s. Adjust oscl. coil trimmer for logging and peak antenna coil trimmer
5.	To antenna lead	600 Kc/s.	200 MMFD Mica in series with generator lead	Turn dial pointer to 600 Kc/s. Adjust oscl. coil inductance trimmer for maximum output whilst rocking gang condenser to and fro
6.	Repeat operations 4 and 5.			

Subject – Voltage Table – Receiver Type 'HN'

Equipment:–

D.C. Volt Meter: – 1000 Ohms per volt with 0-500 and 0-10 volt scales.
A.C. Volt Meter: – With 0-250 volt and 0-10 volt scale.

Conditions of tests:–

All voltages measured from tube socket contacts to chassis, 230 volt, 50 cycle A.C. input, receiver tuned to 1000 Kc/s, volume control full on (clockwise), no signal.

Tubes	Fil.	Plate	Screen	Grid	Cathode	Oscl. Plate
6A8G	6.3 V.A.C.	260V	62V	–	3.8V	150V
6B8G	6.3 V.A.C.	100V	62V	–	3.2V	——
6V6GT/G	6.3 V.A.C.	245V	260V	–	13V	——
5Y3GT/G	5.0 V.A.C.	275/275V R.M.S.		The initial surge voltage across the input, electrolytic condenser, circuit No. 27 is 365 volts, dropping to the normal operating value of 295 volts as the tubes heat. The D.C. voltage drop across the filter choke is 35 volts.		

Bulletin : "HN-1" **File : Receivers A.C.** **Date : 18/2/49**

Subject – Component Parts List, Electrical – Receiver Type 'HN'

Circuit No.	Part Name	Rating	Tol–	Part No. Eclipse
1.	.1 MFD Paper Condenser	400VW	20%	PC103
2.	.1 MFD Paper Condenser	400VW	20%	PC103
3.	.1 MFD Paper Condenser	200VW	20%	PC218
4.	.05 MFD Paper Condenser	200VW	20%	PC102
5.	.05 MFD Paper Condenser	200VW	20%	PC102
6.	.05 MFD Paper Condenser	200VW	20%	PC102
7.	.05 MFD Paper Condenser	200VW	20%	PC102
8.	.5 MFD Paper Condenser	400VW	20%	PC115
9.	.02 MFD Paper Condenser	400VW	20%	PC111
10.	.002 MFD Paper Condenser	600VW	20%	PC112
11.				
12.				
13.	.001 MFD Mica Condenser	1000VT	10%	PC570
14.	.0002 MFD Mica Condenser	1000VT	10%	PC563
15.	.0002 Mica Condenser	1000VT	10%	PC563
16.	.0002 MFD Mica Condenser	1000VT	10%	PC563
17.	.0002 MFD Mica Condenser	1000VT	10%	PC563
18.	460 MMFD Mica Condenser	1000VT	2½%	PC728
19.				
20.				
21.	2 gang Variable Condenser			PC754
22.	1.5 – 18 MMFD Trimmer Condenser			PC250
23.	0-30 MMFD Trimmer Condenser (W.W.)			PC663
24.	25 MFD Electrolytic Condenser	40VP	20%	PC660
25.	25 MFD Electrolytic Condenser	40VP	20%	PC660
26.	16 MFD Electrolytic Condenser	525VP	20%	PC300
27.	16 MFD Electrolytic Condenser	525VP	20%	PC300
28.				
29.				
30.	1.75 meg Carbon Resistor	½ watt	10%	PR248
31.	1.75 meg Carbon Resistor	½ watt	10%	PR248
32.	500,000 ohm Carbon Resistor	½ watt	10%	PR248
33.	100,000 ohm Carbon Resistor	½ watt	10%	PR103
34.	70,000 ohm Carbon Resistor	1 watt	10%	PR617
35.	60,000 ohm Carbon Resistor	1 watt	10%	PR415
36.	60,000 ohm Carbon Resistor	1 watt	10%	PR415
37.	50,000 ohm Carbon Resistor	½ watt	10%	PR160

COMPONENT PARTS LIST – (Cont.)

Circuit No.	Part Name	Rating	Tol–	Part No. Eclipse
38.	50,000 ohm Carbon Resistor	½ watt	10%	PR160
39.	30,000 ohm Carbon Resistor	½ watt	10%	PR151
40.	30,000 ohm Carbon Resistor	1 watt	10%	PR156
41.	2500 ohm Carbon Resistor (2)	½ watt	10%	PR300
42.	2000 ohm Carbon Resistor	½ watt	10%	PR253
43.	2000 ohm Carbon Resistor	½ watt	10%	PR253
44.	600 ohm Carbon Resistor	½ watt	10%	PR338
45.	300 ohm Wire Wound Resistor	1 watt	10%	PR122
46.	.5 megohm Carbon Potentiometer			PR667
47.	4000 ohm Carbon Resistor	1 watt	10%	PR209
48.				
49.				
50.	1st I.F. Transformer			PT461
51.	2nd I.F. Transformer			PT462
52.	Antenna Transformer			PT787
53.	Oscillator Transformer			PT860
54.	14 H. 60 Ma Choke			PT806
55.	Power Transformer			PT807
	Power Transformer – Western Australian Receivers			PT809
56.	Type 6A8G Tube			
57.	Type 6B8G Tube			
58.	Type 6V6GT Tube			
59.	Type 5Y3GT Tube			
60.	Permag Speaker 5000 ohm Imp.			K152
61.				
62.				
63.	Dial Lamp 240V 15 W.			PM553
64.	Output Test Socket			
65.	Oscillator Transformer Adjusting Screw			
66.	1st I.F. Transformer Primary Adjusting Screw			
67.	1st I.F. Transformer Secondary Adjusting Screw			
68.	2nd I.F. Transformer Primary Adjusting Screw			
69.	2nd I.F. Transformer Secondary Adjusting Screw			
70.				
71.	Mains Input Terminal Strip			
72.				
73.				
74.				

Bulletin : "HN-1" **File : Receivers A.C.** **Date : 18/2/49**

Subject – Component Parts List, Mechanical – Receiver Type 'HN'

Cabinet Top – Moulded Bakelite	94/81
Control Knobs	156/81
Control Knobs Insert	17/81
Dial Retaining Cup	3/683
Dial Reading	14/683
Dial Lamp Bracket	4/683
Dial Lamp Socket	A115/250
Valve Shield Bands – Rubber	1/564 – 8
Valve Shield Earth Contacts	22/309
Collar Volume Control Shaft	13/609
Control Rod – Tuning	12/689 – 1
Control Rod – Volume	12/689 – 2
Dial Background Assembly	A104/683
Tension Spring – Dial Drive	27/87
Dial Cord – 40 inches	7/282
Pointer Assembly	A102/683
Dial Track	10/683
Spindle – Tuning	30/683
Grid Clips	873/495
Screws – I.F. Mounting	39/560 – 20
Instruction Booklet	138/278
Carton	A316/294
Valve Placement Diagram	442/279

Bulletin "HN-1" **File: Receivers A.C.** **Date: 18/2/49**

Subject – Coil and I.F. Transformer Connections – Receiver Type 'HN'

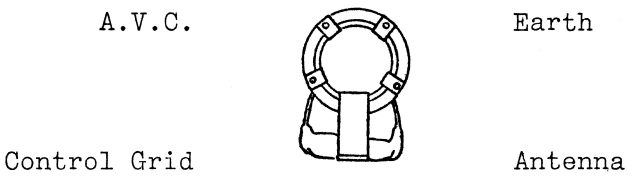

Ant. Transf.

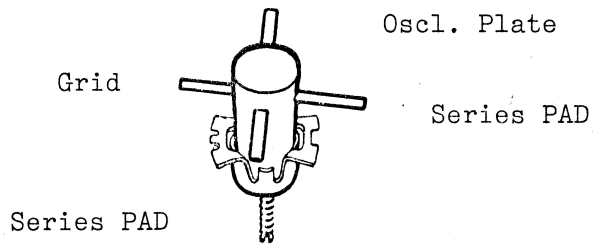

Oscl. Transf.

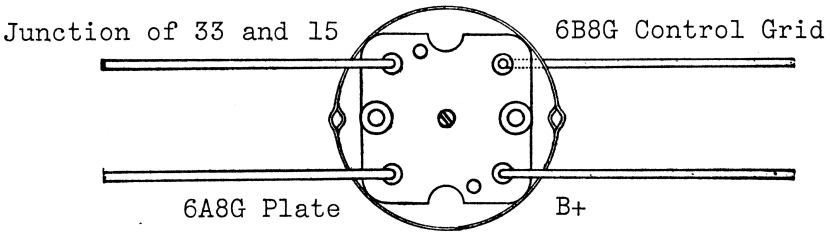

1st I.F. Transf.

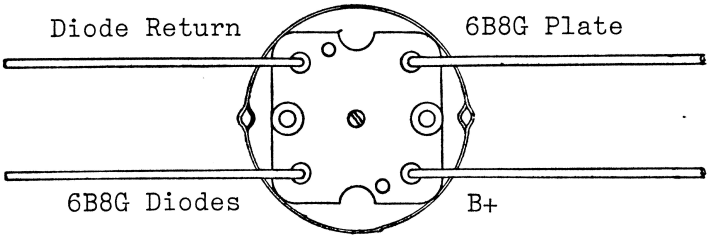

2nd I.F. Transf.