SERVICE MANUAL

TV STEREOGRAM MODEL Y1-D3

"HIS MASTER'S VOICE"

MANUFACTURED & DISTRIBUTED BY
E.M.I. (AUSTRALIA) LIMITED
(INCORPORATED IN N.S.W.)

6 PARRAMATTA ROAD
HOMEBUSH, N.S.W.

SPECIFICATIONS

POWER SUPPLY:
240-250 volts, A.C., 50 Hz.

CONSUMPTION:
TV: 6 watts audio output per channel .. 195 watts
Radio: No signal ..... 9 watts
Radio: 6 watts audio output per channel 29 watts
Gram: 6 watts audio output per channel 38 watts

INTERMEDIATE FREQUENCY:
TV Vision Carrier .... 36.875 MHz
TV Sound Carrier .... 31.375 MHz
Radiogram ..... 455 kHz

SPECIFICATIONS FOR TELEVISION RECEIVER

FUSES:
Mains: 1.5 amp.
H.T.: 1.5 amp.

AERIAL INPUT:
300 ohms balanced.

VALVES AND DIODES:

V1	6ES8	RF Amplifier
V2	6HG8	Frequency Changer
V3	6U9	1st IF Amplifier and Blanking Clamp
V4	6X9	2nd IF Amplifier and Noise Detector
V5	6Y9	Video Amplifier and AGC

August, 1967

Part No. 683-7151

V6	6V9	Sync. Separator
V7	6BX6	5.5 MHz Limiter
V8		
V9	6GV8	Vertical Oscillator and Output
V10	6JW8	Reactance Valve and Horizontal Oscillator
V11	6CM5	Horizontal Output
V12	1S2	EHT Rectifier
V13	6AL3	Damper Diode
MR1	OA90	Video Detector
MR2	OA210	HT Rectifier
MR3	OA210	HT Rectifier
MR4	BA100	AGC Clamp
MR5	AA119	Ratio Detector
MR6	AA119	Ratio Detector
MR7	BA100	Vertical Sync. Diode
MR8		
MR9	AB1122	Phase Discriminator
MR10	AB1122	Phase Discriminator

SPECIFICATIONS FOR RADIOGRAM

FREQUENCY RANGE:
520-1650 kHz.

POWER OUTPUT:
6 watts each channel (sine wave).

OUTPUT LOAD IMPEDANCE:
15 ohms at 400 Hz.

LOUDSPEAKERS:
2 x 8" Magnavox type 8WR (Twin cone).

RECORD CHANGER:
Garrard, 4 speed, Type 3000.

PICKUP:
Sonotone, Type 9TA, Ceramic Cartridge.

STYLI:
Sonotone, Type N9TADS.
Diamond, Stereo and Microgroove, 0.7 mil. tip.
Sapphire, 78 rpm., 2.5 mil. tip.

DIAL LAMPS:
6.3 volts, 0.3 amp.

ADDITIONAL FACILITIES:
Jack — Input, Left Channel.
Jack — Input, Right Channel.
Jack — Output, Left Channel.
Jack — Output, Right Channel.
Terminals for extension speaker.

SEMI-CONDUCTORS:

TR1	SE1001	Frequency Changer
TR2	SE1001	1st IF Amplifier
TR3	SE1001	2nd IF Amplifier
TR4	SE4010	Audio Pre-Amplifier/Equaliser
TR5	SE4010	Audio Pre-Amplifier/Equaliser
TR6	SE4002	Audio High Pass Filter
TR7	SE4002	Audio High Pass Filter
TR8	SE4002	Audio Amplifier
TR9	SE4002	Audio Amplifier
TR10	SE6002	Audio Driver
TR11	SE6002	Audio Driver
TR12	AY8103	Audio Output } Matched Pair
TR13	AY8103	Audio Output } Matched Pair
TR14	AY8103	Audio Output } Matched Pair
TR15	AY8103	Audio Output } Matched Pair
MR1	OA90	Auxiliary AGC
MR2	OA90	Signal Detector and AGC
MR3	AS25	Power Rectifier
MR4	AS25	Power Rectifier
MR5	AB1102	Bias Stabilising Diode
MR6	AB1102	Bias Stabilising Diode
MR7	AB1102	Bias Stabilising Diode
MR8	AB1102	Bias Stabilising Diode

DIMENSIONS:

Width	65"
Height	30"
Depth	18"

WEIGHT:

Gross	227 lb.
Nett	186 lb.

SERVICE NOTES FOR TELEVISION CHASSIS

CAUTION

The normal B+ voltages in these receivers are dangerous. Use extreme caution when servicing. The high voltage at the picture tube anode (17,000 volts) will give an unpleasant shock, but does not supply enough current to give a fatal shock. However, secondary human reactions to otherwise harmless shocks have been known to cause injury.

Always discharge the picture tube anode to the chassis or to its aquadag coating, before handling the tube. The picture tube is highly evacuated and, if broken, it may violently expel glass fragments. When handling the picture tube, always wear goggles.

DISMANTLING

TO HINGE DOWN CHASSIS

1. Remove power plug from mains supply socket.
2. Remove 4 PK screws holding cover plate to cabinet. Care must be taken in removing back to prevent damage to television chassis components.
3. Swing chassis down.

TO REMOVE TUNER

1. Hinge down chassis as above.
2. Remove Channel Selector, Picture and Set Black knobs.
3. Remove plug on aerial leads from output panel.

4. Loosen the captive mounting screw holding the tuner mounting bracket (till screw falls free) and remove the wing-nut holding tuner bracket. Withdraw tuner assembly several inches. Unplug TV audio lead on left-hand side of tuner assembly.
5. Remove tuner assembly.
6. Tuner may be hooked to left side of main chassis by dropping tongue on tuner bracket into slot provided. Slide tuner forward and tighten self-tapping screw.

REMOVE CHASSIS AND TUNER

1. Remove tuner as above.
2. Unplug EHT supply, CRT cap, yoke leads, undo staple and unplug TV mains lead from radio.
3. Tilt chassis to approximately 45 degrees and lift clear of pivots.

TO REMOVE PICTURE TUBE

1. Remove chassis and tuner as above.
2. Remove four screws (securing picture tube) from rear.
3. Tilt back to about 45 degrees and lift out.

ADJUSTMENTS

MAINS VOLTAGE. Before leaving the factory, the mains input is set to the 240-volt tap on the transformer. A 250-volt tap is also provided for use where necessary. To make the alteration, withdraw the plug and fuse on the black lead from the holder marked "240V" on the rear of the mains transformer. Remove rubber bung from "250V" fuse holder and insert the fuse and plug in this position. Insert rubber bung into "240V" socket.

HORIZONTAL OSCILLATOR. This is set at the factory and normally should not need further adjustment. However, after a change of components it may be necessary to re-adjust. The procedure is as follows:

(1) Connect cathodes (+) of the discriminator diodes MR9, MR10 together.
(2) Push and turn the horizontal hold control to mid position (Cathode potential of V10 triode = $3\frac{1}{4}$V).
(3) Adjust core of L33 for correct frequency.
(4) Remove connection from discriminator diodes and short grid of sync. amplifier, V6 triode, to earth.
(5) Adjust discriminator balance control RV9 for correct oscillator frequency.
(6) Remove short from sync. separator.

CONTRAST RANGE. This control may be adjusted by inserting a thin screwdriver into the shaft of the "Picture" control, after removing the knob.

Set the "Picture" control to the extreme anti-clockwise position. The "Set Black" control should be turned up to give sufficient brightness on the screen to be able to observe a weak picture. Adjust the "Contrast Range" control so that the picture just disappears, after going out of lock. Advance the control until the picture re-appears and just locks in. Re-set the "Set Black" control.

SET BLACK. To adjust the "Set Black" control, select the strongest signal. Turn "Picture" control fully anti-clockwise. Then adjust the brightness until **only** the darkest parts of the picture are black. The "Picture" control may then be advanced to raise the highlights of the picture to the required level.

A.G.C. The pre-set AGC control should be set, when necessary, to the weakest signal, i.e., that displaying the most "snow" or grey to white flecks in the picture. Adjust the control to the position which just reduces the snow to a minimum.

BOOST VOLTAGE. The boost voltage may be adjusted, where necessary, by means of the pre-set control adjacent to the line output transformer. Access to this control is easier from the reverse side of the chassis, when it has been swung down.

Reduce the picture tube beam current to zero, by means of the "Set Black" control. The voltage, measured **across** C109, (.047 uF) should be adjusted to 510 volts, which assures optimum picture width and EHT voltage. Re-set the "Set Black" control.

NOTE: Do not use a meter protected with silicon diodes, as this gives a rectifying effect and results in an incorrect reading.

FOCUS. The only time that focus adjustment may be necessary is after replacement of the picture tube. The focus potentiometer (RV11), which is a strip pre-set type, is located on the edge of the chassis and adjacent to the EHT rectifier socket and is accessible when the chassis is swung down. Adjust for optimum overall focus across the picture tube face.

LINEARITY. Before adjusting either vertical or horizontal linearity, the picture shift magnets should be neutralised. To do this, the two magnets should be rotated with respect to each other. The neutralised setting is such that, when both magnets are rotated together, they have little effect on the picture position.

After adjustment has been made for best linearity, the picture may need to be re-centred. The linearity should be re-touched where necessary.

VERTICAL LINEARITY. The vertical linearity pre-set potentiometer, RV8, should be adjusted, in conjunction with the vertical height control, for best linearity, using a pattern on the screen.

HORIZONTAL LINEARITY. The horizontal linearity coil is situated adjacent to the EHT rectifier, and may be adjusted from the side of the chassis.

The slug should be adjusted for best linearity, using a pattern on the screen. Two positions of the slug provide suitable conditions, but the position in which the slug is farthest out of the coil is the correct one.

PICTURE CENTRING. The picture may be centred by rotating the two shift magnets on the tube neck, behind the deflection yoke. Rotate the centring magnet assembly to shift the picture in the required direction, and move one of the magnets with respect to the other, to change the strength of the field, and so the amount of picture shift.

PICTURE TILT. If the picture is not square with the edges of the mask, loosen the clamping ring on the deflection coils and rotate the assembly until the picture is squared up. Tighten the clamping ring and, if necessary, re-centre the picture.

SERVICE NOTE:

These receivers have a number of regulating devices, such as voltage dependent resistors and diodes, which are designed to correct departures from mean operating conditions.

In fault tracing, a certain amount of masking of the true cause occurs and defective parts or incorrect operation may be difficult to isolate.

Servicemen are therefore advised to consider carefully any substitution of components or diagnosis of faults, before making adjustments, and so avoid unnecessary complications in repairs.

SOUND I.F. ALIGNMENT

The following equipment is necessary:

(i) An RF Oscillator, capable of being set accurately to 5.5 MHz.
(ii) A 20,000 ohms/volt multimeter.
(iii) A peak-to-peak detector, as shown in Fig. 1.

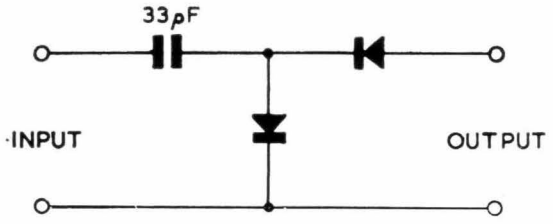

Fig. 1.—Peak-to-Peak Detector.

5.5 MHz. TRAP (IFT3)

IFT3 is a combined 5.5 MHz. null trap and sound take-off transformer. This is set at the factory and normally should not need further adjustment.

Should it be necessary to re-tune IFT3, the following method is recommended.

(1) Inject 5.5 MHz. at approximately 100 mV, between the junction of L29 and MR1, and earth.

(2) Connect the input of the peak-to-peak detector to the CRT cathode, pin 7. Connect the output of the peak-to-peak detector to a multimeter, set to a low DC voltage range.

(3) Remove both cores from former. Screw in primary core (furthest from chassis) to give a minimum reading.

(4) Screw in secondary core until meter reading rises slightly, and then adjust primary core until a new minimum is obtained.

(5) Repeat adjustment of primary and secondary until meter reads zero.

RATIO DETECTOR TRANSFORMER (IFT4)

Connect the 5.5 MHz. oscillator as in (1) above. Connect the multimeter between the junction of R67 and R68, and earth. Adjust the secondary core (nearest chassis) so that a positive or negative reading is obtained. Adjust the primary so that this reading shows a maximum. Then adjust the secondary for zero reading. This adjustment may also be done by using an off air signal.

VISION I.F. ALIGNMENT

The following equipment is necessary:

(i) A sweep generator, covering the range 28 to 40 MHz.
(ii) A marker generator, covering the same range.
(iii) A C.R.O.

These instruments should be interconnected as described in the instructions supplied with the sweep generator. This generator should be terminated with a resistor equal to the output impedance, and connected to the receiver as shown in Fig. 2.

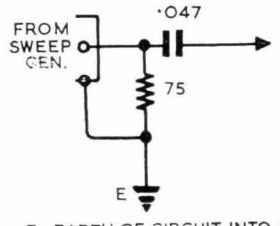

E–EARTH OF CIRCUIT INTO WHICH SIGNAL IS BEING INJECTED.

Fig. 2.

Because of the high gain of the receivers, care should be taken to ensure that all components replaced are on short leads and placed in exactly the same position as the original part.

Care must also be taken to avoid feed-back in interconnecting leads of the alignment equipment.

NOTE (1): Throughout the alignment, the display should be adjusted so that the response is accurately set between the reference level and the base line, from a signal of about 2 volts peak-to-peak. The output of the IF strip should be maintained at that level by varying the output from the sweep generator and not the gain of the display unit.

NOTE (2): Coupling between stages will not require adjusting, unless either IFT1 or IFT2 has been replaced.

NOTE (3): Cores in L21, L22, L24, L27, IFT1 and IFT2 are set in the position furthest from the chassis.

Cores in L20, L23 and L26 are set in position nearest the chassis.

OPERATION 1.

(a) Connect a bias supply of 9 volts, across the IF AGC smoothing capacitor, C51.
(b) Connect the display unit across C40a.
(c) Remove cores from L21, L24 and L27.

OPERATION 2.

(a) Using the termination network as shown in Fig. 2, connect sweep output between pin 3 of V4 and earth.
(b) Adjust the cores of L26 and IFT2 to obtain the response of Fig. 3, Stage 1.
(c) If IFT2 has been replaced, it will be necessary to adjust the coupling by closing the spacing of the two windings of IFT2, until the desired bandwidth is achieved.
(d) If a dip appears in the response, remove it by adjusting the core in L23.

OPERATION 3.

(a) Remove the sweep from V4 and connect between pin 2 of V3 and earth.
(b) Adjust the cores of L23 and IFT1 to obtain the response of Fig. 3, Stage 2.
(c) If a dip appears in the response, remove it by adjusting the tuner IF core.
(d) If IFT1 has been replaced, it will be necessary to adjust the coupling, by closing the spacing of the two windings of IFT1, until the desired bandwidth is achieved.

OPERATION 4.

(a) Remove the sweep from V3 and connect it to the IF test point on tuner, located adjacent to V2. Switch tuner to the position between Channel 11 and 0.
(b) Adjust the core in L11 (IF output coil, adjacent to V2) and L20, to obtain the response to Fig. 3, Stage 3.

OPERATION 5.

(a) Insert a core in L24 and adjust to a minimum at 38.375 MHz. If necessary, adjust the spacing between L23 and L24, to ensure that the response at 38.375 MHz. is at least 50 dB below peak response. To measure this, increase the sweep generator output by 30 dB. Re-set the base line with the vertical shift control, if necessary, and the 20 dB will represent the 50 dB point required below the reference level.
(b) Adjust the core in L22 to read a minimum at 29.875 MHz.
(c) Insert a core in L27 and adjust until a small plateau appears in the response at 32.8 MHz.
(d) Insert a core in L21 and adjust the tuning and, if necessary, the spacing between L21 and L20, so that the response at 31.375 MHz. is 22 dB below peak response. Fig 3, Stage 4.
(e) Remove the bias supply and check that the response curve remains substantially unchanged.
(f) Seal the coils of L21, L24 and L27 with a light cellulose adhesive.

NOTE: The noise detector response as shown dotted in Fig.3, Stage 4, automatically should be correct. However, if it is desired to check it, the following procedure should be adopted:

Leave the sweep connected as in Operation 4. Disconnect the display from across C40a and connect it between the junction of R58 and C52, and earth. Remove V5 and V6 from their sockets. The response as shown dotted in Fig. 3, Stage 4, should be obtained.

If the level is not the same as the IF response curve, the coupling between L26 and L27 should be adjusted, until this is obtained.

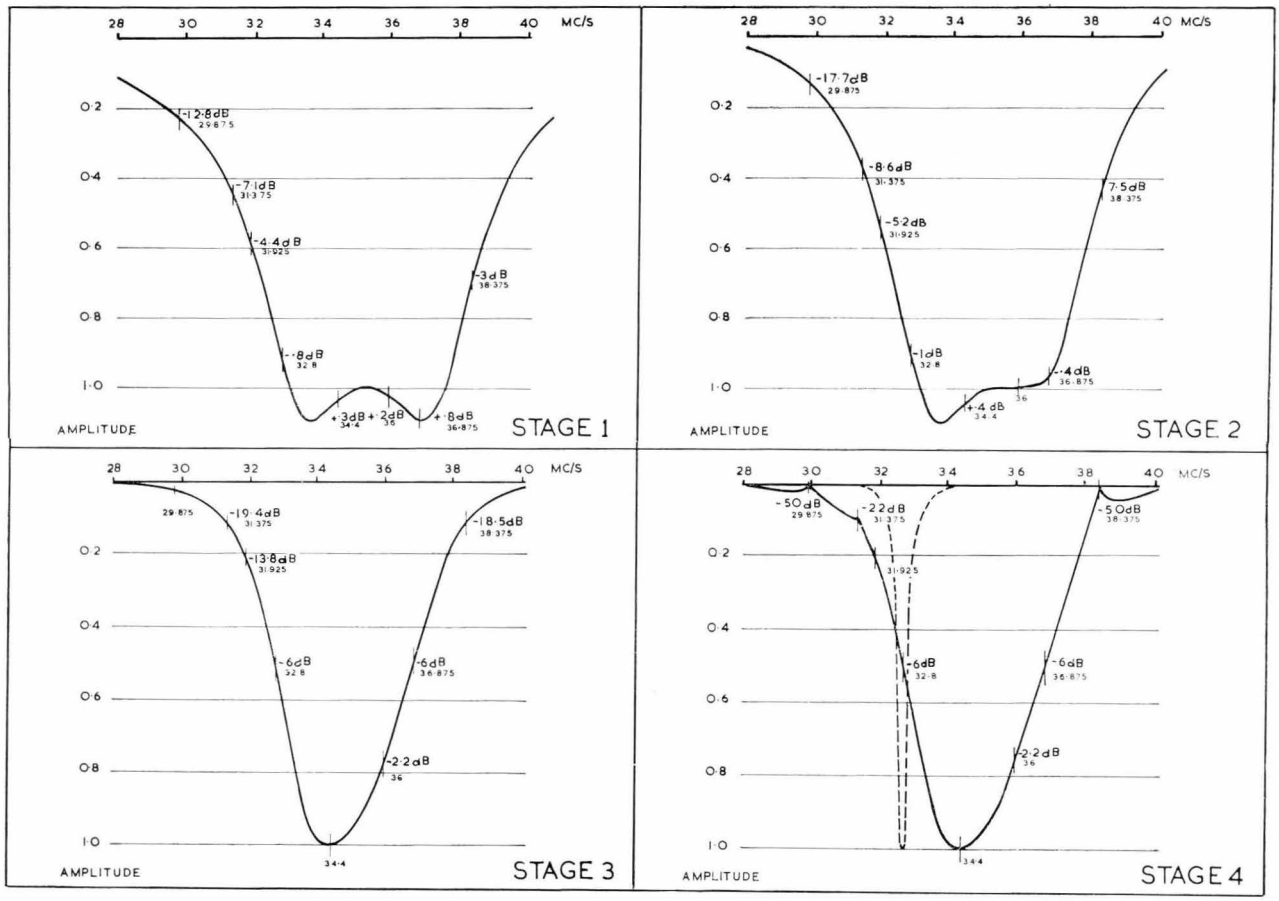

Fig. 3
I.F. ALIGNMENT CURVES

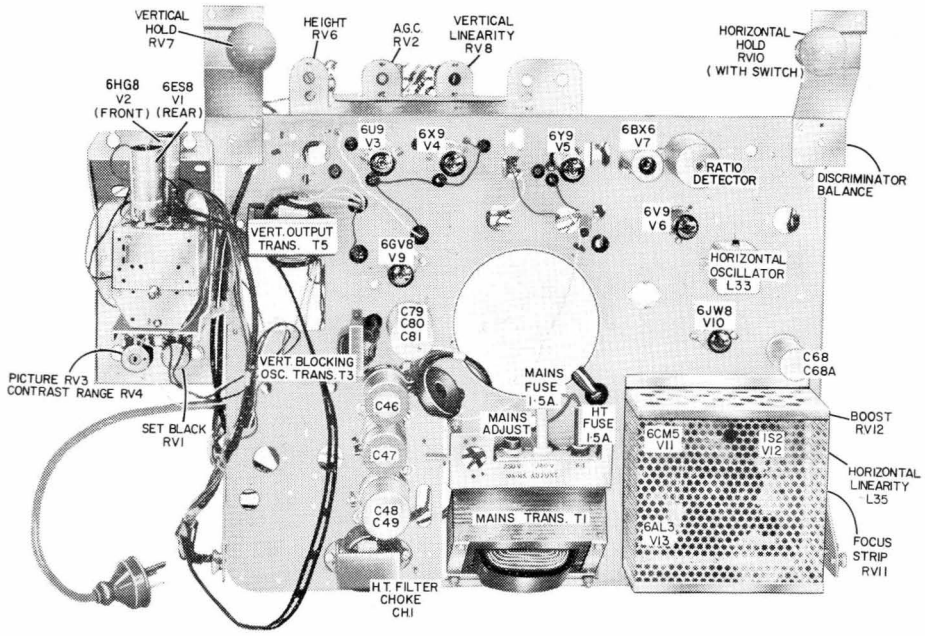

REAR VIEW OF CHASSIS

Y1 TELEVISION CHASSIS PARTS LIST

RESISTORS

REF.	PART NO.	DESCRIPTION
R20	740-0032	2.2K ± 10% ½W
R21	750-0932	2.2K ± 10% 4W
R21a	750-0662	3.9K ± 10% 4W
R22	742-1142	2.7K ± 20% 1W
R23	740-0983	22 ohms ± 10% ½W Morganite
R24	740-0651	100 ohms ± 10% ½W Morganite
R25	742-0712	2.2K ± 20% 1W
R26	740-0102	22K ± 10% ½W
R27	740-0412	820 ohms ± 10% ½W
R28	740-0442	120 ohms ± 10% ½W
R29	740-0822	33K ± 20% ½W
R30	740-0792	8.2K ± 10% ½W
R31	750-0362	2.7K ± 10% PW5
R32	742-1012	3.3K ± 20% 1W
R33		
R34	740-0862	18K ± 10% ½W
R34a	740-0532	1M ± 20% ½W
R35	740-0042	2.7K ± 10% ½W
R36	Part of 259-1261	2.7K ± 10% 1W Former for Equalising Coil
R37	740-0572	1K ± 20% ½W
R38	740-0922	330 ohms ± 10% ½W
R39	750-0702	2.7K ± 5% PF7
R40	740-0773	39 ohms ± 10% ½W Morganite
R41	740-0582	47K ± 20% ½W
R42		
R43	740-0362	390K ± 10% ½W
R44	740-0622	470K ± 20% ½W
R45	740-0272	150 ohms ± 10% ½W
R46	740-0272	150 ohms ± 10% ½W
R47	750-0682	300 ohms ± 10% PW5
R48	740-0722	1.5M ± 10% ½W
R49	742-0892	2.2M ± 10% 1W
R49a	740-0532	1M ± 20% ½W
R50	742-0192	1M ± 10% 1W
R51	742-0732	1.8M ± 10% 1W
R52		
R53	742-0062	27K ± 10% 1W
R54	740-0773	39 ohms ± 10% ½W Morganite
R55	740-0702	56K ± 10% ½W
R56	742-0392	47K ± 20% 1W
R57	740-0812	3.3K ± 20% ½W
R58	742-0592	2.2M ± 20% 1W
R59	740-0212	3.3M ± 10% ½W
R60	742-0352	1M ± 20% 1W
R61	742-0332	15K ± 20% 1W
R62	742-0372	22K ± 20% 1W
R63	740-0512	100K ± 20% ½W
R64	740-0822	33K ± 20% ½W
R65	740-0612	10K ± 20% ½W
R66	742-0372	22K ± 20% BTA 1W
R67	740-0112	27K ± 10% ½W
R68	740-0112	27K ± 10% ½W
R69	740-0612	10K ± 20% ½W
R70	740-0612	10K ± 20% ½W

RESISTORS (continued)

REF.	PART NO.	DESCRIPTION
R71	740-0081	10K ± 10% ½W
R72		
R73		
R74		
R75		
R76		
R77		
R78		
R79		
R80		
R81	742-0022	4.7K ± 10% 1W
R82	742-0342	330K ± 20% 1W
R83	742-0142	270K ± 10% 1W
R84	742-1092	3.3M ± 20% 1W
R85	742-1122	750K ± 5% 1W
R86	740-0822	33K ± 20% ½W
R87	742-0592	2.2M ± 20% 1W
R88	740-0232	39K ± 10% ½W
R89	740-1422	4.7K ± 20% ½W
R90	740-0822	33K ± 20% ½W
R91	740-0202	2.2M ± 10% ½W
R92	742-0823	270 ohms ± 10% 1W Morganite
R93	740-0582	47K ± 20% ½W
R94	740-0032	2.2K ± 10% ½W
R95	742-0002	1K ± 10% 1W
R95a	742-0002	1K ± 10% 1W
R96	740-0132	82K ± 10% ½W
R97	740-1243	6.8 ohms ± 10% ½W Morganite
R98	740-1243	6.8 ohms ± 10% ½W Morganite
R99	742-0352	1M ± 20% 1W
R100	742-0402	150K ± 20% 1W
R100a	742-0492	68K ± 10% 1W
R101	740-0242	33K ± 10% ½W
R102	740-0322	1.2K ± 10% ½W
R102a	740-0592	22K ± 20% ½W
R103	740-0412	820 ohms ± 10% ½W
R104	740-0732	12K ± 10% ½W
R105	740-0752	68K ± 10% ½W
R106	740-0852	560K ± 10% ½W
R107	740-0852	560K ± 10% ½W
R108	742-0052	22K ± 10% 1W
R109	742-0372	22K ± 20% 1W
R110	740-0382	6.8K ± 10% ½W
R111	740-0592	22K ± 20% ½W
R112	742-0172	470K ± 10% 1W
R113	740-0242	33K ± 10% ½W
R114	740-0062	3.9K ± 10% ½W
R115	740-0102	22K ± 10% ½W
R116	742-0062	27K ± 10% 1W
R117	740-0822	33K ± 20% ½W
R118		
R119	742-0352	1M ± 20% 1W
R120	742-0352	1M ± 20% 1W
R121	750-0362	2.7K ± 10% PW5
R122	740-0572	1K ± 20% ½W
R123	742-0562	470K ± 20% 1W

Y1 TELEVISION CHASSIS PARTS LIST

REF.	PART NO.	DESCRIPTION
		RESISTORS (continued)
R124	742-0562	470K ± 20% 1W
R125	742-0562	470K ± 20% 1W
R125a	742-0402	150K ± 20% 1W
R126	961-0921	0.5 ohm resistance wire
R127	742-0102	82K ± 10% 1W
R128	742-0102	82K ± 10% 1W
R129	742-1092	3.3M ± 20% 1W
R130	750-0602	22 ohms ± 10% PW5
R131	740-1043	27 ohms ± 10% ½W Morganite
R132	740-0502	15K ± 20% ½W
		CAPACITORS
C20	271-1721	39pF ± 5% N330 Ceramic Disc
C21	273-0591	68pF ± 2½% MS Mica
C22	271-0911	.003uF GMV 500V CTR
C22a	271-0911	.003uF GMV 500V CTR
C23	271-0911	.003uF GMV 500V CTR
C24	271-0911	.003uF GMV 500V CTR
C25	271-0621	.001uF Lead thru CAC 107
C26	271-0351	33pF ± 5% NPO Tube
C27	271-0731	.047uF +80% —20% 25V Redcap
C28	271-0591	.0027uF ± 20% K2000 Disc
C29	273-0591	68pF ± 2½% MS Mica
C30	271-0281	.022uF GMV 100V Disc
C31	271-1221	82pF Lead thru CAC 106
C32	271-1271	.001uF ± 20% Disc
C33	269-1041	10uF 6V Electro
C34	271-0911	.003uF GMV 500V CTR
C35	273-0591	68pF ± 2½% MS Mica
C36	271-0591	.0027uF ± 20% K2000 Disc
C36a	271-0281	.022uF GMV 100V Ceramic Disc
C37	271-0941	8.2pF ± ½pF NPO Disc
C38	283-1661	.022uF ± 10% 400V Polyester
C39	271-0621	.001uF Lead thru CAC 107
C40	271-0941	8.2pF ± ½pF NPO Disc
C40a	271-1061	15pF ± 10% N330 Tube
C41	271-0221	2.2pF ± ¼pF NPO Bead
C42	283-1741	.1uF ± 10% 400V Polyester
C43	271-0311	27pF ± 5% NPO Tube 'A'
C44		
C45	283-1701	.047uF ± 10% 400V Polyester
C46	269-0521	100uF 150VW Electro EMG2024S
C47	269-0521	100uF 150VW Electro EMG2024S
C48, C49	269-0901	200uF 275VW Electro; 60uF 275VW Electro; EMG1716M
C50	283-1821	0.47uF ± 10% 160V Polyester
C51	283-1121	.01uF ± 10% 160V Polyester
C51a	283-1121	.01uF ± 10% 160V Polyester
C52	283-1621	.01uF ± 10% 400V Polyester

REF.	PART NO.	DESCRIPTION
		CAPACITORS (continued)
C53	280-1791	220pF ± 10% 600V Styroseal
C54	271-0571	22pF ± 10% NPO Tube
C55	271-0941	8.2pF ± ½pF NPO Disc
C56	271-0591	.0027uF ± 20% K2000 Disc
C57	271-0801	10pF ± 5% NPO Disc
C58	271-0771	100pF ± 5% NPO Disc
C59	280-1501	100pF ± 5% 600V Styroseal
C60	280-1501	100pF ± 5% 600V Styroseal
C61	269-0781	4uF 25VW Electro
C62	271-1601	220pF K2000 Ceramic Disc
C63	283-1161	.022uF ± 10% 160V Polyester
C64		
C65		
C66		
C67		
C68, C68a	269-1161	8uF 250VW Electro; 16uF 250VW Electro; EBD381
C69		
C70	269-1261	2uF 350VW Electro
C71	271-0911	.003uF GMV 500V CTR
C72	283-1721	.068uF ± 10% 400V Polyester
C73	271-1271	.001uF ± 20% Disc
C74	283-1721	.068uF ± 10% 400V Polyester
C75	283-1701	.047uF ± 10% 400V Polyester
C76	271-1271	.001uF ± 20% Disc
C77	271-1271	.001uF ± 20% Disc
C78	283-1261	.15uF ± 10% 125V Polyester
C79, C80, C81	269-0981	24uF 300VW Electro; 50uF 300VW Electro; 100uF 25VW Electro; ECT-244
C82	283-1661	.022uF ± 10% 400V Polyester
C83	283-1581	.0047uF ± 10% 400V Polyester
C84	280-2041	220pF ± 20% 600V Styroseal
C84a	271-1371	22pF ± 20% N330 Ceramic Disc
C85		
C86	283-1361	1uF 160V Polyester
C87	280-3241	330pF ± 20% 125V Styroseal
C88	283-5101	.0068uF ± 20% 50V Polyester
C89	283-5101	.0068uF ± 20% 50V Polyester
C90	283-5741	.1uF ± 10% 50V Polyester
C91	271-0571	22pF ± 10% NPO Tube
C92	280-3351	47pF ± 20% 600V Styroseal
C93	280-1091	.0056uF ± 10% 400V Styroseal
C94	280-1101	.0068uF ± 10% 400V Styroseal
C95	280-3351	47pF ±20% 600V Styroseal

Y1 TELEVISION CHASSIS PARTS LIST

REF.	PART NO.	DESCRIPTION
		CAPACITORS (continued)
C96	283-1141	.015uF ± 10% 125V Polyester
C97	283-1201	.047uF ± 10% 125V Polyester
C98	271-1241	820pF ± 20% K2000 Tube
C99	283-1501	.001uF ± 10% 400V Polyester
C100	283-1321	.47uF ± 10% 160V Polyester
C101	283-1581	.0047uF ± 10% 400V Polyester
C102	271-0911	.003uF GMV 500V CTR
C103	271-0991	220 pF 2KV Tube
C104	284-0661	.022uF ± 20% 600V Dipol
C105		68pF 3KV Tube (Ex MSP)
C106	284-1281	.22uF ± 20% 1000V Dipol
C107	271-0911	.003 uF GMV 500V CTR
C108	284-2701	.047uF ± 10% 100V Dipol
C109	284-2701	.047uF ± 10% 100V Dipol
C110	271-0911	.003uF GMV 500V CTR
C111	283-1701	.047uF + 10% 400V Polyester
C112	271-0911	.003uF GMV 500V CTR
C113	283-1771	.18uF ± 10% 400V Polyester
C114	271-1251	18pF ± 20% 3KV
		POTENTIOMETERS
RV1	677-1691	500K Curve 'A'—Set Black
RV2	677-0912	1M Curve 'A'—AGC
RV3	677-1681	50K Curve 'A' (front)—Contrast
RV4		25K Curve 'A' (rear)—Contrast Range
RV5		
RV6	677-0341	250K Curve 'A'—Height
RV7	677-1103	500K Curve 'A'—Vert. Hold
RV8	677-0511	10K Curve 'A'—Vertical Linearity
RV9	677-1122	15K Curve 'A'—Discriminator Balance
RV10	677-1671	100K Curve 'A'—Horizontal Hold
RV11	677-0891	2M Curve 'A'—Strip—Focus
RV12	677-0911	1M Curve 'A'—Boost
		VALVES
V1	932-1161	6ES8—RF Amplifier
V2	932-1921	6HG8—Frequency Changer
V3	932-2331	6U9—1st IF Amplifier and Blanking Clamp
V4	932-2341	6X9—2nd IF Amplifier and Noise Detector
V5	932-2351	6Y9—Video Amplifier and AGC
V6	932-2411	6V9—Sync. Separator and Amplifier
V7	932-0521	6BX6—5.5 MHz. Limiter
V8		

REF.	PART NO.	DESCRIPTION
		VALVES (continued)
V9	932-2001	6GV8—Vertical Oscillator and Output
V10	932-2371	6JW8—Reactance Valve and Horizontal Oscillator
V11	932-0531	6CM5—Horizontal Output
V12	932-0771	1S2—EHT Rectifier
V13	932-1151	6AL3—Damper Diode
		DIODES
MR1	932-0971	OA90—Video Detector
MR2	932-1071	OA210—HT Rectifier
MR3	932-1071	OA210—HT Rectifier
MR4	932-2451	BA100—AGC Clamp
MR5	932-2081	AA119—Ratio Detector
MR6	932-2081	AA119—Ratio Detector
MR7	932-2451	BA100—Vertical Sync. Diode
MR8		
MR9	932-2961	AB1122—Phase Discriminator
MR10	932-2961	AB1122—Phase Discriminator
		COILS
L20	259-1461	IF Input Coil
L21		31.375 MHz. Trap
L22	259-1491	29.875 MHz. Trap
L23	259-1471	1st IF Anode Coil
L24		38.375 MHz. Trap
L25	259-1431	Filter Choke
L25a	259-1431	Filter Choke
L25b	259-1431	Filter Choke
L26	259-1481	2nd IF Anode Coil
L27		Noise Take-off Coil
L28		
L29	259-0956	Coil—Grid Peaking Choke
L30	259-1262	Equalising Coil
L31		
L32	908-0802	Video Peaking (Transformer)
L33	259-1543	Line Oscillator Coil
L34	259-0045	Anti-Parasitic Coil
L34a	259-0045	Anti-Parasitic Coil
L35	259-1252	Linearity Coil
		TRANSFORMERS
T1	904-0451	Power Transformer
T2		
T3	908-0781	Vert. Oscillator Transformer
T4	908-0742	Vert. Feedback Transformer
T5	905-0602	Vert. Output Transformer
T6	908-0771	Horiz. Output Transformer
IFT1	906-0591	Vision IFT
IFT2	906-0711	Vision IFT
IFT3	906-0721	Sound IFT and 5.5 MHz. Trap
IFT4	906-0324	Ratio Detector Transformer
		MISCELLANEOUS
CH1	232-0351	HT Choke
VDR1	750-0711	Voltage Dependent Resistor, Type E299 DC/P342

Y1 TELEVISION CHASSIS PARTS LIST

REF.	PART NO.	DESCRIPTION
	MISCELLANEOUS (continued)	
VDR2	750-0691	Voltage Dependent Resistor, Type E298 ED/A262, Violet Spot
VDR3	750-0571	Voltage Dependent Resistor, Type E298 ZZ/06, Black End, Blue Spot

REF.	PART NO.	DESCRIPTION
	MISCELLANEOUS (continued)	
VDR4	750-0761	Voltage Dependent Resistor, Type E299 DE/P354
FS1	431-0081	Fuse, 1.5 amp., Mains
FS2	431-0081	Fuse, 1.5 amp., HT Secondary
Tuner	224-2031	Phillips NT 3014
Yoke	259-1581	Coil Deflection, 43663A
CRT	932-2642	C.R.T. 25" Kimcode

SERVICE NOTES FOR RADIOGRAM CHASSIS

DISMANTLING

TO REMOVE RADIO CHASSIS

1. Remove power plug from mains supply socket.
2. Unwrap mains lead from lead wrapping brackets.
3. Lift right-hand lid to gain access to record storage.
4. Remove two screws in front wall of record storage cabinet.
5. Insert screwdriver through left-hand screw hole, pushing firmly, grasp left-hand corner and lift chassis up. Close lid and lay piece of felt or similar material on lid.
6. Place chassis on felt.
7. Unplug indicator lamp, mains lead to TV, audio lead to TV, speaker lead, gramophone pick-up leads, motor leads. Pull mains lead through hole from back of cabinet and unplug external aerial from red terminal (on radio chassis).
8. Easy access may be gained to radio chassis for spot checks by removing right-hand speaker grille (see below).

ACCESS TO SPEAKERS

1. Remove the door stop screw located above the picture tube under the top edge of cabinet, and slide door in towards picture tube.
2. Remove two grille fixing screws located under front edge of cabinet.
3. Firmly press in outer edge of grille approximately 5" from top. Remove grille panel from bottom. Speaker is then accessible.

TO REMOVE MECHANISM

1. Remove the power plug from the mains supply socket and raise the left-hand lid of the cabinet.
2. Press down rear left-hand corner of mechanism plate. Placing fingers through the hole at back of cabinet, turn the spring clip to a vertical position and release the clip.
3. Grasping the mechanism firmly, pull to the left and lift mechanism clear.
4. Tilt back and unplug pick-up leads.
5. With a screwdriver, loosen screw holding pick-up tag panel and remove spade with green lead attached.
6. Unscrew screw on motor mounting and remove spade with green and grey leads attached.
7. Unscrew black and grey leads from terminal block.
8. Remove mechanism.

TO CHANGE INDICATOR LIGHT GLOBE

Reach under front of cabinet to socket at rear of cleat and replace globe.

ADJUSTMENTS

Transistors can be permanently damaged by excessive external heat, or by heat generated within the circuit by excessive current flow. When servicing this equipment, the following precautions should be observed:

Supply polarity should never be reversed. Never remove or replace a transistor or circuit component without first switching off the power.

When soldering transistor leads, use a small iron. Solder as rapidly as possible, keeping the iron well clear of the transistor body. The use of a 240-volt soldering iron should be avoided, as leakage and capacitance effects can destroy a transistor. To avoid this problem, a low-voltage iron with a step-down transformer should be used.

To unsolder multi - terminal components (IF transformers, etc.), it is best to apply heat simultaneously to all terminals, using a special iron tip. If a normal tip is used, apply the iron to each soldered joint in turn, and brush away the solder with a stiff brush.

Disconnect transistors before making circuit checks with an ohm meter. Failure to do so will give misleading results and the transistors may be damaged by excessive conduction caused by the ohm meter battery. Check polarity of the ohm meter leads; electrolytic capacitors may be damaged if the ohm meter battery voltage is applied in reverse polarity.

When taking voltage measurements, avoid accidental short-circuits by the voltmeter probes.

Fault-finding can be carried out in the usual manner, keeping in mind that a transistor failure is unlikely.

When using a signal generator, a DC blocking capacitor should be used in the live lead to prevent disturbance of the transistor DC circuits.

Before connecting the generator, adjust its attenuator for minimum output. Signal generators designed for vacuum tube circuits can often deliver more signal than a transistor can safely handle.

The output must be correctly loaded with 15 ohms during these tests. If the output load is reduced below the correct value, the maximum dissipation of the output transistors will be exceeded at medium and high output levels.

ALIGNMENT PROCEDURE

In any case where a component replacement has been made in either IF or RF circuits of the receiver, all circuits should be re-aligned. IF alignment should always precede RF alignment. An output meter, having a resistance of at least 250 ohms, is connected across the voice coil of one of the speakers.

In carrying out the following operations, it is important that the input to the receiver from the signal generator be kept low and progressively reduced as the circuits are brought into line, in order that overloading shall be avoided.

NOTE:

(a) The tuning tool should be a small plastic screwdriver with a tip which fits cleanly into the tuning core.

(b) When tuning the core, do not use any downward pressure, as the threaded former has enough resilience to detune the circuit, after the pressure is released.

IF ALIGNMENT

(1) Set the signal generator to 455 kHz, with 30% modulation at 400 Hz. Turn the receiver volume control to maximum and set the tuning control to the LF end of the band.

(2) Detune the five cores of the IF transformers by screwing them well out.

(3) Inject the signal from the generator, via a 0.1uF capacitor, into the base of TR3. Adjust the core of T7 for maximum reading on the output meter.

(4) Inject the signal into the base of TR2. Adjust the cores of T5 and T6 for maximum reading on the output meter.

(5) Inject the signal into the base of TR1. Adjust the cores of T3 and T4 for maximum reading on the output meter.

RF ALIGNMENT

(1) With the controls set as for IF alignment, connect signal generator output via a standard dummy aerial to the aerial lead and chassis of the receiver.

(2) Check that the pointers coincide with the setting lines at the left of the dial scale, when the gang capacitor is fully enmeshed. Correct if necessary.

(3) Set the signal generator to 600 kHz.

(4) Turn tuning control until the pointer is exactly over the 600 kHz. calibration mark. Adjust the core in T2 for maximum reading on the output meter.

(5) Set signal generator to 1500 kHz.

(6) Turn tuning control until the pointer is exactly over the 1500 kHz. calibration mark. Adjust VC1 and VC3 for maximum reading on the output meter.

(7) Repeat operations (3) to (6) for optimum alignment.

AERIAL

The receiver is provided with a built-in, partly directional, ferrite rod aerial. Because of its directional properties, the placement of this model in a room may occasionally affect radio reception in weak signal areas when no external aerial is used. It may be necessary to disconnect one end of the rod aerial from its retainer and reposition it a more satisfactory position.

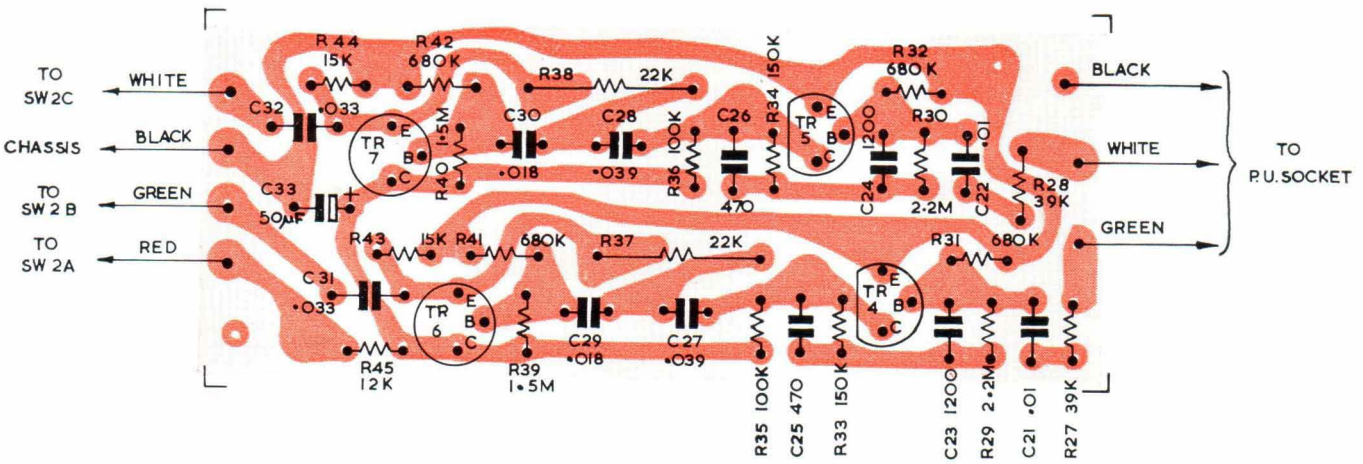

PRE-AMPLIFIER — VIEW FROM COPPER SIDE

Y1 RADIOGRAM CHASSIS PARTS LIST

REF.	PART NO.	DESCRIPTION
		RESISTORS
R1	Part of 259-0712	2.2K ± 10% BTA
R2	740-0962	10K ± 5% ½W
R3	740-1382	1.8K ± 5% ½W
R4	740-0332	100K ± 5% ½W
R5	740-0172	270K ± 10% ½W
R6	740-0012	470 ohms ± 10% ½W
R7	740-1172	470 ohms ± 5% ½W
R8	740-0043	2.7K ± 10% ½W
R9	740-0172	270K ± 10% ½W
R10	740-1532	18K ± 5% ½W
R11	740-1582	150K ± 5% ½W
R12	740-0142	100K ± 10% ½W
R13	740-1182	1K ± 5% ½W
R14	740-1182	1K ± 5% ½W
R15	740-0862	18K ± 10% ½W
R16	740-0072	4.7K ± 10% ½W
R17	740-0142	100K ± 10% ½W
R18	740-0012	470 ohms ± 10% ½W
R19	740-0412	820 ohms ± 10% ½W
R20	740-0102	22K ± 10% ½W
R21	740-0252	1.5K ± 10% ½W
R22	740-0072	4.7K ± 10% ½W
R23	740-0092	15K ± 10% ½W
R24	740-0252	1.5K ± 10% ½W
R25		
R26		
R27	740-0232	39K ± 10% ½W
R28	740-0232	39K ± 10% ½W
R29	740-0202	2.2M ± 10% ½W
R30	740-0202	2.2M ± 10% ½W
R31	740-0672	680K ± 10% ½W
R32	740-0672	680K ± 10% ½W
R33	740-0152	150K ± 10% ½W
R34	740-0152	150K ± 10% ½W
R35	740-0142	100K ± 10% ½W
R36	740-0142	100K ± 10% ½W
R37	740-0102	22K ± 10% ½W
R38	740-0102	22K ± 10% ½W
R39	740-0722	1.5M ± 10% ½W
R40	740-0722	1.5M ± 10% ½W
R41	740-0672	680K ± 10% ½W
R42	740-0672	680K ± 10% ½W
R43	740-0092	15K ± 10% ½W
R44	740-0092	15K ± 10% ½W
R45	740-0732	12K ± 10% ½W
R46	740-0042	2.7K ± 10% ½W
R47	740-0042	2.7K ± 10% ½W
R48	740-0042	2.7K ± 10% ½W
R49	740-0042	2.7K ± 10% ½W
R50		
R50a	740-0072	4.7K ± 10% ½W BTS
R51	740-0662	82 ohms ± 10% ½W BTS
R52	740-0662	82 ohms ± 10% ½W BTS
R52a	740-0072	4.7K ± 10% ½W BTS
R53	740-1182	1K ± 5% ½W
R54	740-1182	1K ± 5% ½W
R55	740-0172	270K ± 10% ½W
R56	740-0172	270K ± 10% ½W

REF.	PART NO.	DESCRIPTION
		RESISTORS (continued)
R57	740-1532	18K ± 5% ½W
R58	740-0182	470K ± 10% ½W
R58a	740-0022	1K ± 10% ½W
R59	740-1772	680K ± 5% ½W
R60	740-1732	330K ± 5% ½W
R61	740-1732	330K ± 5% ½W
R62	740-1772	680K ± 5% ½W
R63	740-0182	470K ± 10% ½W
R63a	740-0022	1K ± 10% ½W
R64	740-1532	18K ± 5% ½W
R65	740-1182	1K ± 5% ½W
R66	740-1182	1K ± 5% ½W
R67	740-0042	2.7K ± 10% ½W
R68	740-0042	2.7K ± 10% ½W
R69	742-1172	560 ohms ± 5% 1W
R70	740-0912	22 ohms ± 5% ½W
R71	742-1172	560 ohms ± 5% 1W
R72	740-0912	22 ohms ± 5% ½W
R73	740-0912	22 ohms ± 5% ½W
R74	742-1172	560 ohms ± 5% 1W
R75	740-0912	22 ohms ± 5% ½W
R76	742-1172	560 ohms ± 5% 1W
R77	746-0182	1 ohm ± 10% ½W WW
R78	746-0182	1 ohm ± 10% ½W WW
R79	746-0182	1 ohm ± 10% ½W WW
R80	746-0182	1 ohm ± 10% ½W WW
R81	740-0262	560 ohms ± 10% ½W
R82	740-0262	560 ohms ± 10% ½W
R83	740-0292	270 ohms ± 10% ½W
R84	740-0081	10K ± 10% ½W
R85	Part of 259-0712	2.2K ± 10% BTA
		CAPACITORS
C1	271-0741	.01uF +80% —20% 25V Redcap
C2	271-0741	.01uF +80% —20% 25V Redcap
C3	280-3191	470pF ± 5% 125V Styroseal
C3a	271-0731	.047uF + 80% —20% 25V Redcap
C4	271-0731	.047uF + 80% —20% 25V Redcap
C5	269-1041	10uF 6VW Electro
C6	280-3191	470pF ± 5% 125V Styroseal
C7	271-0731	.047uF + 80% —20% 25V Redcap
C8	271-0731	.047uF + 80% —20% 25V Redcap
C9	280-3191	470pF ± 5% 125V Styroseal
C10	271-0731	.047uF + 80% —20% 25V Redcap
C11	280-3191	470pF ± 5% 125V Styroseal
C12	271-0761	.1uF +80% —20% 25V Redcap
C13	280-3251	.001uF ± 5% 50V Styroseal
C14	271-0731	.047uF + 80% —20% 25V Redcap
C15	271-1271	.001uF ± 20% Ceramic Type AY

Y1 RADIOGRAM CHASSIS PARTS LIST

REF.	PART NO.	DESCRIPTION
		CAPACITORS (continued)
C16	271-1271	.001uF ± 20% Ceramic Type AY
C17	269-1251	50uF 25VW Electro
C18	271-1261	.01uF ± 20% 25V Redcap
C19		
C20		
C21	271-0741	.01uF +80% —20% 25V Redcap
C22	271-0741	.01uF +80% —20% 25V Redcap
C23	280-0261	1200pF ± 10% 200V Styroseal
C24	280-0261	1200pF ± 10% 200V Styroseal
C25	280-3401	470pF ± 10% 100V Styroseal
C26	280-3401	470pF ± 10% 100V Styroseal
C27	283-1191	.039uF ± 10% 160V Polyester
C28	283-1191	.039uF ± 10% 160V Polyester
C29	283-1151	.018uF ± 10% 160V Polyester
C30	283-1151	.018uF ± 10% 160V Polyester
C31	283-1181	.033uF ± 10% 160V Polyester
C32	283-1181	.033uF ± 10% 160V Polyester
C33	269-1251	50uF 25VW Electro
C34	280-3311	.0047uF ± 10% 50V Styroseal
C35	271-1561	.1uF ± 20% 25V Redcap
C36	271-1561	.1uF ± 20% 25V Redcap
C37	280-3311	.0047uF ± 10% 50V Styroseal
C38	283-5221	.068uF ± 20% 50V Polyester
C39	283-5221	.068uF ± 20% 50V Polyester
C40	280-0541	.0022uF ± 20% 100V Styroseal
C41	283-5231	.082uF ± 20% 50V Polyester
C42	283-5231	.082uF ± 20% 50V Polyester
C43	280-0541	.0022uF ± 20% 100V Styroseal
C44	271-0871	.47uF +80% —20% 25V Redcap
C45	271-0871	.47uF +80% —20% 25V Redcap
C46	269-1391	100uF 6.4V Electro
C47	271-0841	470pF ± 20% Ceramic Disc
C48	271-0841	470pF ± 20% Ceramic Disc
C49	279-2121	.01uF ± 20% 600V Paper
C49a	279-2121	.01uF ± 20% 600V Paper
C50	269-1211	12.5uF 25VW Electro
C51	269-1381	640uF 6.4V Electro
C52	269-1381	640uF 6.4V Electro
C53	269-1211	12.5uF 25VW Electro
C54	271-1261	.01uF ± 20% Redcap
		CAPACITORS (continued)
C55	271-1261	.01uF ± 20% Redcap
C56	269-1221	2000uF 50VW Electro
C57	283-1361	1uF ± 10% 160V Polyester
C58	269-1241	500uF 25VW Electro
C59	269-1241	500uF 25VW Electro
C60	271-0741	.01uF +80% —20% 25V Redcap
C61	271-1481	.003uF ± 20% 500V Disc
C62	271-0741	.01uF +80% —20% 25V Redcap
		POTENTIOMETERS
RV1, RV2	677-1392	2 x 50K Curve C
RV3, RV4	677-1392	2 x 50K Curve C
RV5, RV6	677-1581	2 x 100K Curve A, tapped 39K and 61K
RV7	677-1571	100 ohms Curve A
		SEMI-CONDUCTORS
TR1	932-2431	SE1001—Frequency Changer
TR2	932-2431	SE1001—1st IF Amplifier
TR3	932-2431	SE1001—2nd IF Amplifier
TR4	932-2731	SE4010—Audio Pre-Amp./Equaliser
TR5	932-2731	SE4010—Audio Pre-Amp./Equaliser
TR6	932-2471	SE4002—Audio High Pass Filter
TR7	932-2471	SE4002—Audio High Pass Filter
TR8	932-2471	SE4002—Audio Amplifier
TR9	932-2471	SE4002—Audio Amplifier
TR10	932-2581	SE6002—Audio Driver
TR11	932-2581	SE6002—Audio Driver
TR12, TR13	932-2881	2 x AY8103—Audio Output (Matched Pair)
TR14, TR15	932-2881	2 x AY8103—Audio Output (Matched Pair)
		DIODES
MR1	932-0971	OA90—Auxiliary AGC
MR2	932-0971	OA90—Signal Detector and AGC
MR3	932-2261	AS25—Power Rectifier
MR4	932-2261	AS25—Power Rectifier
MR5	932-2541	AB1102—Bias Stabilising Diode
MR6	932-2541	AB1102—Bias Stabilising Diode
MR7	932-2541	AB1102—Bias Stabilising Diode
MR8	932-2541	AB1102—Bias Stabilising Diode
		TRANSFORMERS
T1	253-0232	Aerial Rod Assembly
T2	257-0225	Oscillator Coil
T3	906-0731	IF Transformer

Y1 RADIOGRAM CHASSIS PARTS LIST

REF.	PART NO.	DESCRIPTION
	TRANSFORMERS (continued)	
T4	906-0741	IF Transformer
T5	906-0731	IF Transformer
T6	906-0741	IF Transformer
T7	906-0751	IF Transformer
T8	908-0792	Driver Transformer
T9	908-0792	Driver Transformer
T10	904-0461	Mains Transformer
	MISCELLANEOUS	
L1	259-0712	Aerial Loading Coil

REF.	PART NO.	DESCRIPTION
	MISCELLANEOUS (Continued)	
L2	259-0712	Aerial Loading Coil
VC1	281-0031	Trimmer Capacitor, Philips
VC3	281-0311	Trimmer Capacitor, Wire Type
VC2, VC4	281-0341	2-Gang Capacitor
FS1	431-0071	Fuse, 1 amp.
SW1, SW2, SW3, SW4	855-2501	Switch, 4-pole

CABINET PARTS LIST

REF.	PART NO.	DESCRIPTION
	192-3371	Cabinet—Danish Walnut
	558-1571	Garrard record changer, type 3000, fitted with Sonotone 9TA cartridge, and type N9TADS stylus.
	211-0431	Cartridge, less styli.
	611-0571	Styli
	403-3401	Escutcheon
	517-2611	Knob, Push-Button, Red
	517-2751	Knob, Channel Indicator
	517-2761	Knob, "Picture," and "Set Black"

REF.	PART NO.	DESCRIPTION
	517-2772	Knob, Fine Tuning
	517-2781	Knob, Push-Button, Grey
	561-1791	Medallion, Microphone
	561-1901	Medallion, Trade Mark
	575-0011	Microphone
	794-2011	Dial Scale
	831-2501	Speaker, 8WR
	932-1171	6.3V, .32 amp. (Dial Scale Lamps).
	932-1941	6.3V, .25 amp. (Channel Indicator Lamp and Power Warning Lamp)

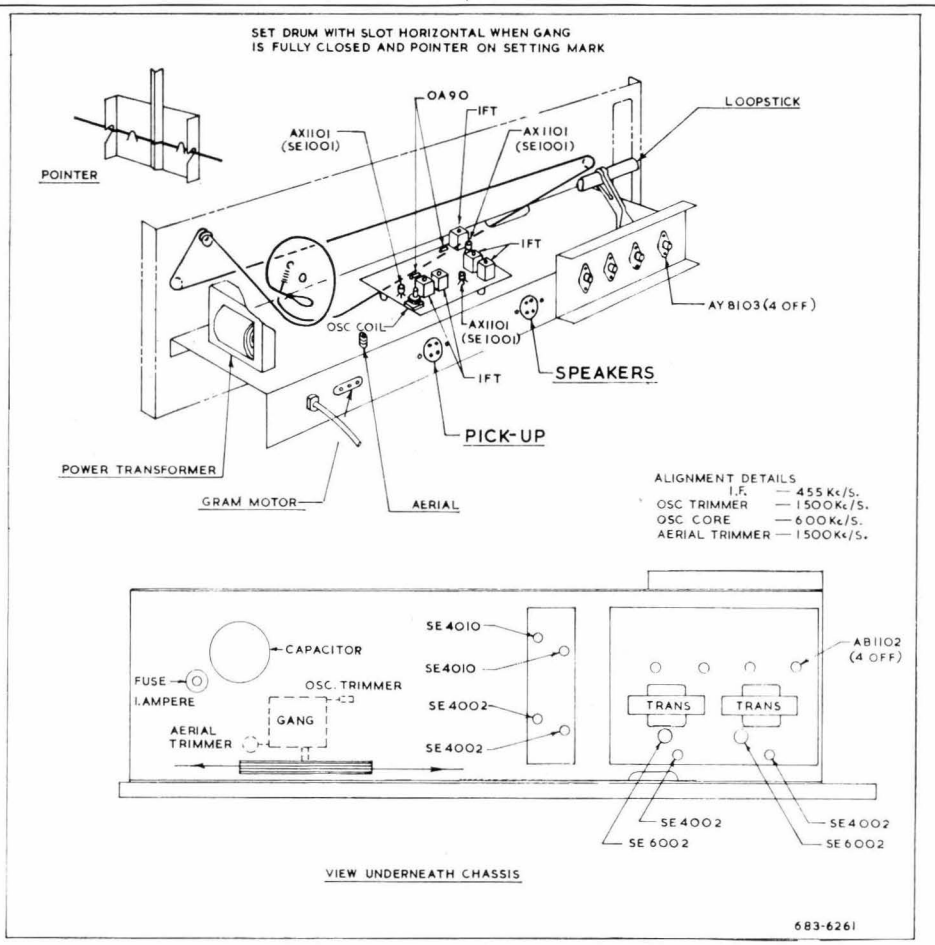

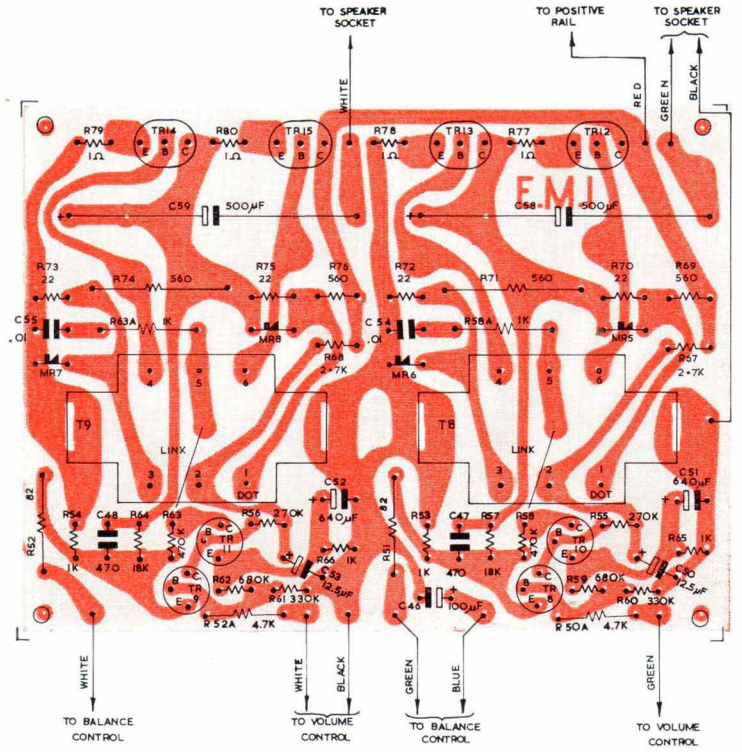

AUDIO AMPLIFIER — VIEW FROM COPPER SIDE

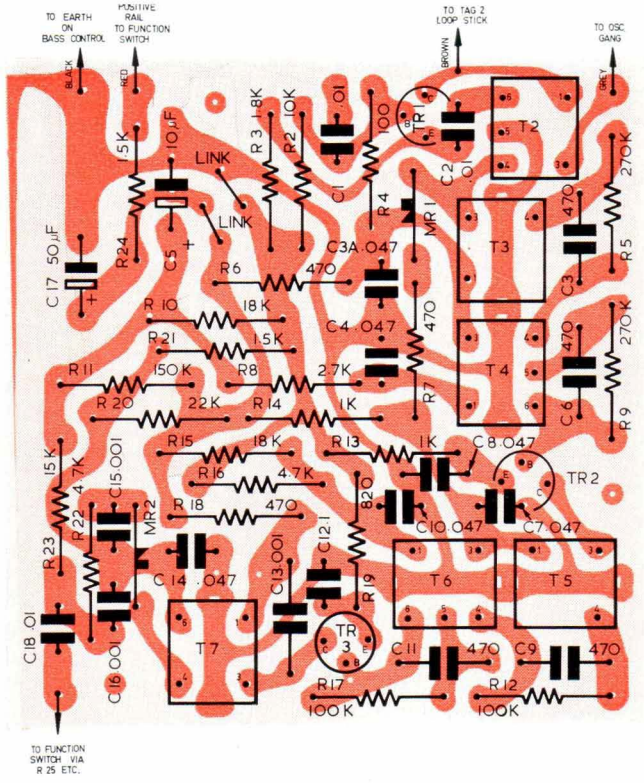

TUNER — VIEW FROM COPPER SIDE

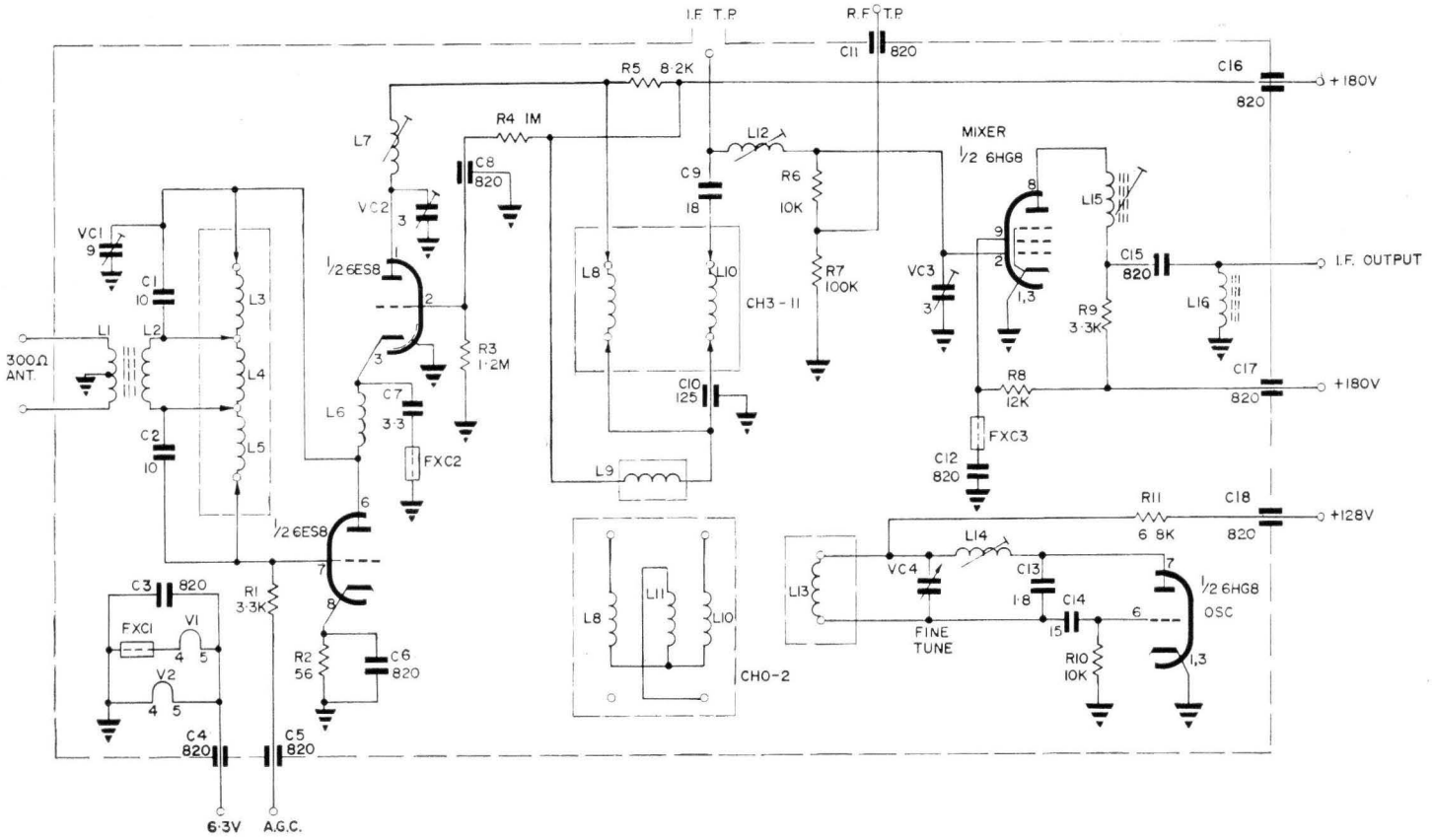

TUNER TYPE 3014

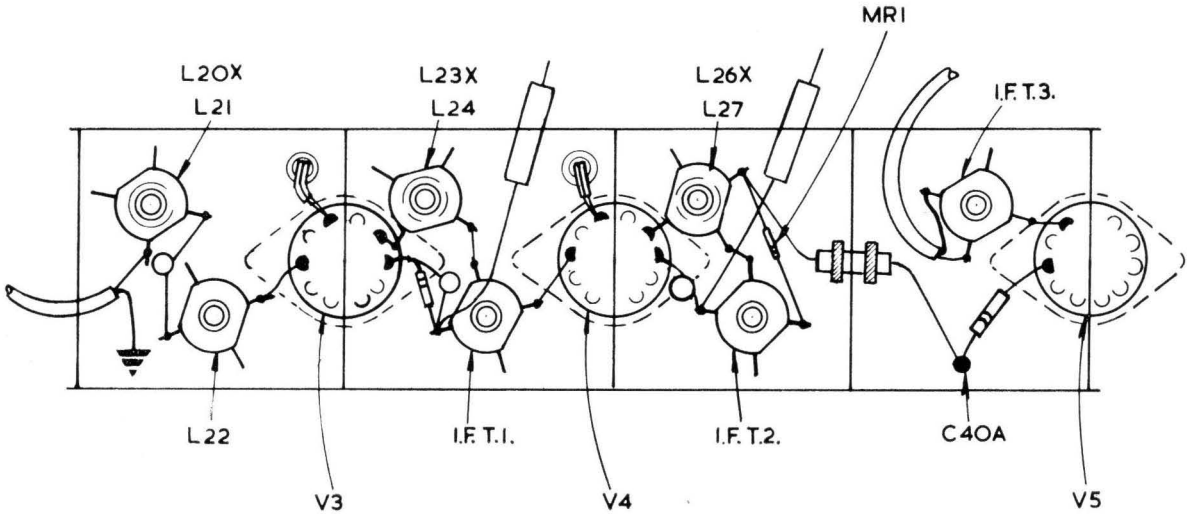

LOCATION OF COILS FROM UNDERSIDE OF CHASSIS.

X INDICATES COIL NEAREST CHASSIS.

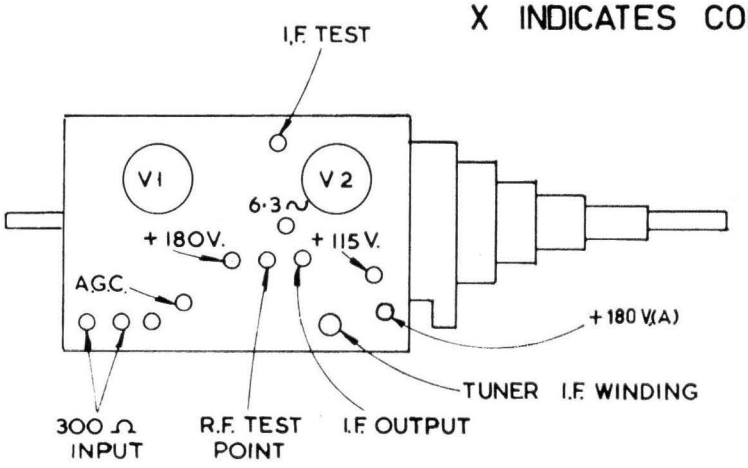

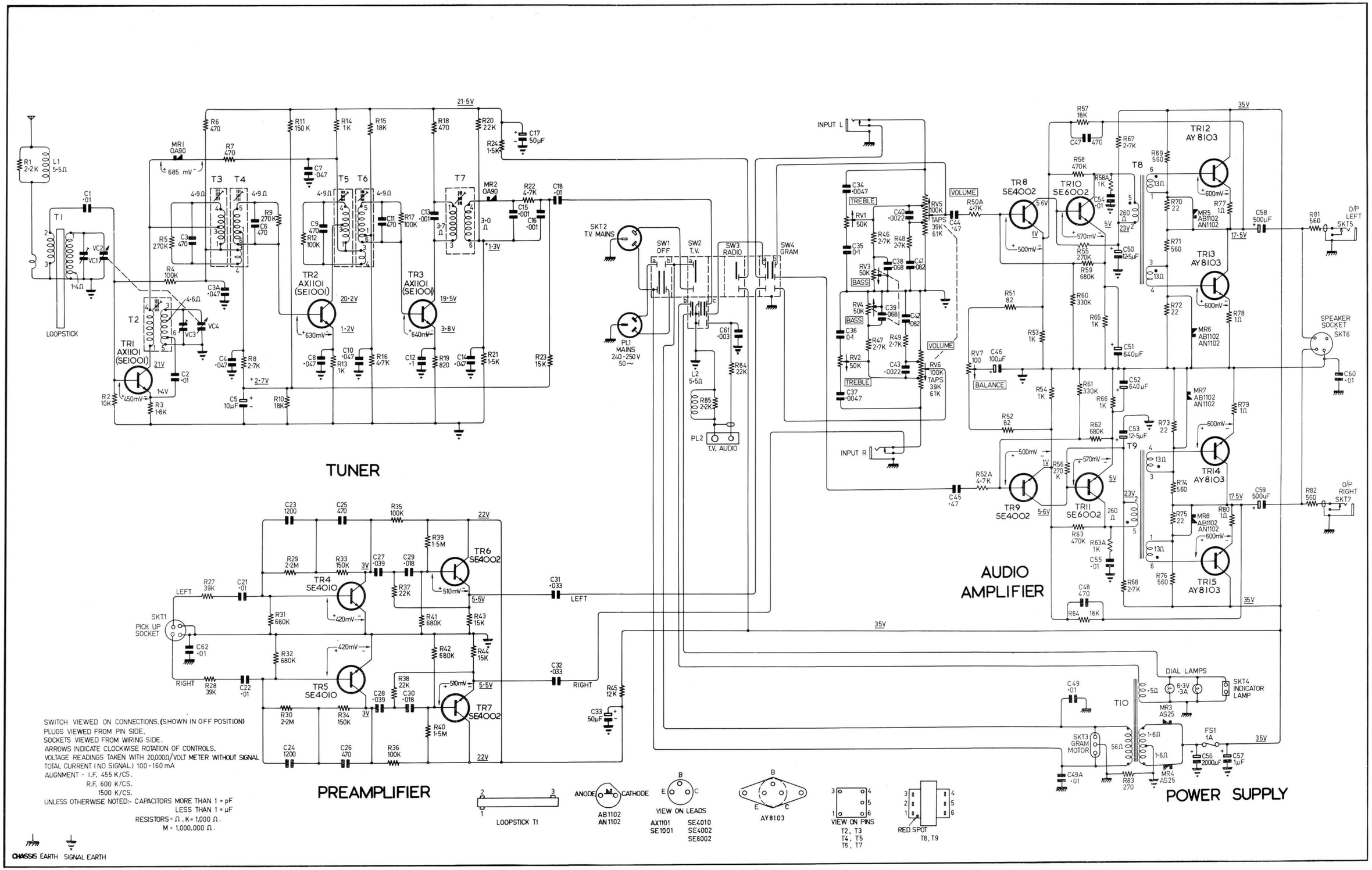

NOTE: R84 has been changed to 10K.

Y1 RADIOGRAM CIRCUIT DIAGRAM

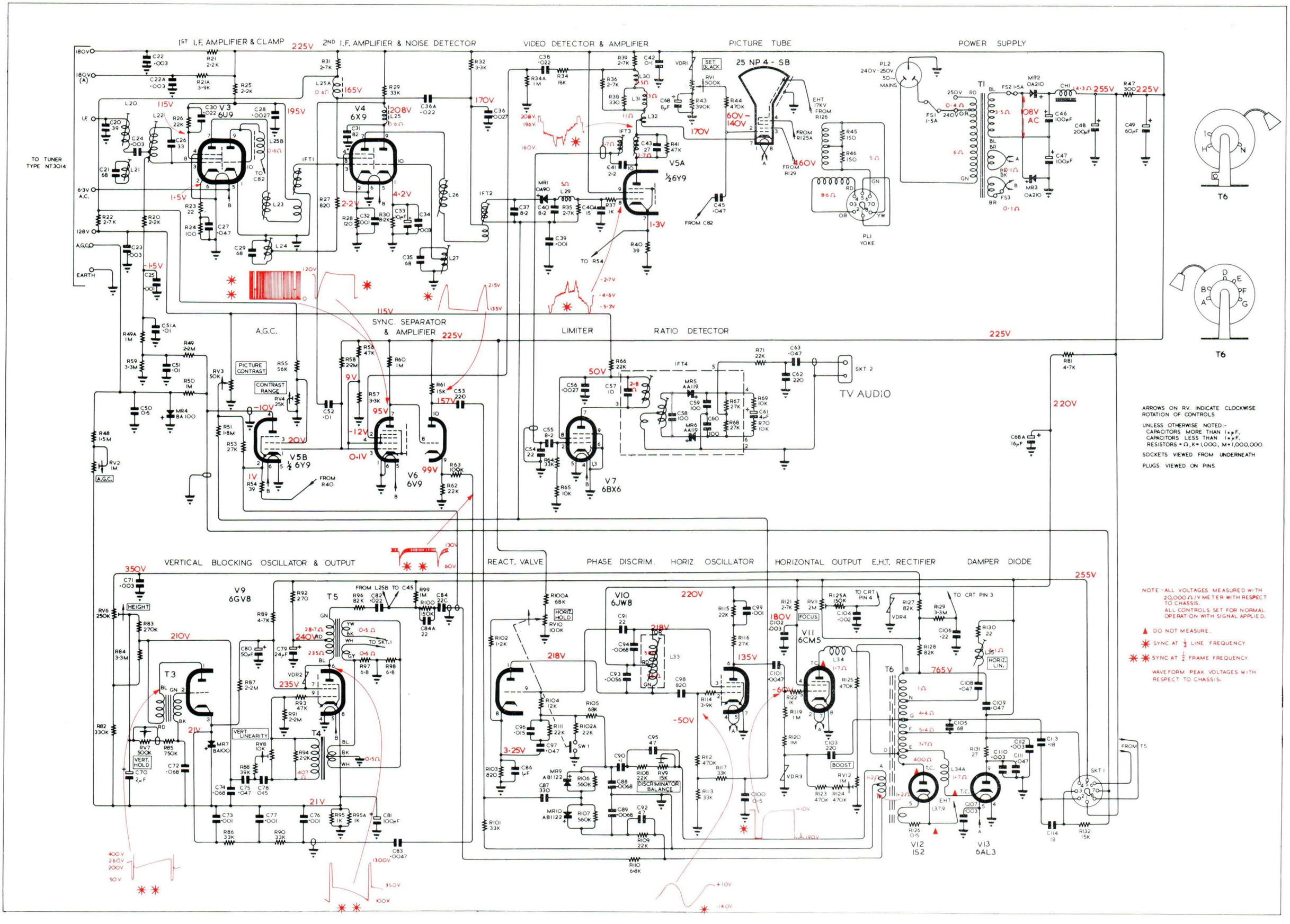

NOTE: R71 has been changed to 10K.
C63 has been changed to .022uF.

Y1 TELEVISION CHASSIS CIRCUIT DIAGRAM