SERVICE MANUAL

TELEVISION CHASSIS TYPE W1

"HIS MASTER'S VOICE"

MANUFACTURED & DISTRIBUTED BY
E.M.I. (AUSTRALIA) LIMITED
(INCORPORATED IN N.S.W.)

6 PARRAMATTA ROAD
HOMEBUSH, N.S.W.

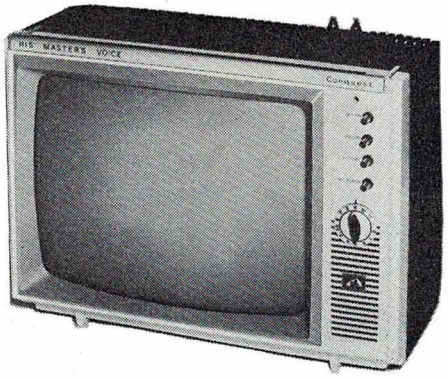

SPECIFICATIONS

POWER SUPPLY:
230-260 volts, A.C., 50 c/s.
CONSUMPTION:
130 watts.
AERIAL INPUT:
300 ohms balanced.
INTERMEDIATE FREQUENCIES:
Vision Carrier: 36.875 Mc/s.
Sound Carrier 31.375 Mc/s.
FUSE:
1 amp.

VALVES AND SEMI-CONDUCTORS

TR1	SE 5002	First IF Amplifier
TR2	SE 5002	Second IF Amplifier
TR3	BF 184	Third IF Amplifier
TR4	SE 1002	Video Driver
TR5	SE 7010	Video Output
TR6	SE 1002	AGC
TR7	SE 1002	AGC Amplifier
TR8	SE 1002	Sync Separator
TR9	SE 1002	Noise Gate
TR10	SE 1002	Inter-Carrier Amplifier
TR11	SE 1002	Limiter
TR12	SE 1002	Audio Amplifier
TR13	SE 1002	Vertical Multivibrator
TR14	SE 1002	Vertical Multivibrator

VALVES AND SEMI-CONDUCTORS (continued)

TR15	SE 1002	Vertical Feedback Amplifier
V1	6GK8	RF Amplifier
V2	6HG8	Frequency Changer
V3	6BQ5	Audio Output
V4	6CW5	Vertical Output
V5	6JW8	Horizontal Oscillator and Reactance Valve
V6	6CM5	Horizontal Output
V7	6AL3	Damper Diode
V8	1S2	EHT Rectifier
MR1	OA90	Video Detector
MR2	OA210	HT Rectifier
MR3	OA210	HT Rectifier
MR4	OA91	AGC Stand Off Diode
MR5	BA100	Delay Diode
MR6	AB1101	Noise Gate Catcher
MR7	AA119	Limiter Diode
MR8	AA119	Ratio Detector Diode
MR9	AA119	Ratio Detector Diode
MR10	AB1101	Sync Clipper
MR11	BA100	Sync Gate
MR12	AB1101	Vertical Drive Catcher
MR13	OA202	Blanking Clamp
MR14	AB1101	Phase Discriminator
MR15	AB1101	Phase Discriminator

OCTOBER, 1966

PART No. 683-7021

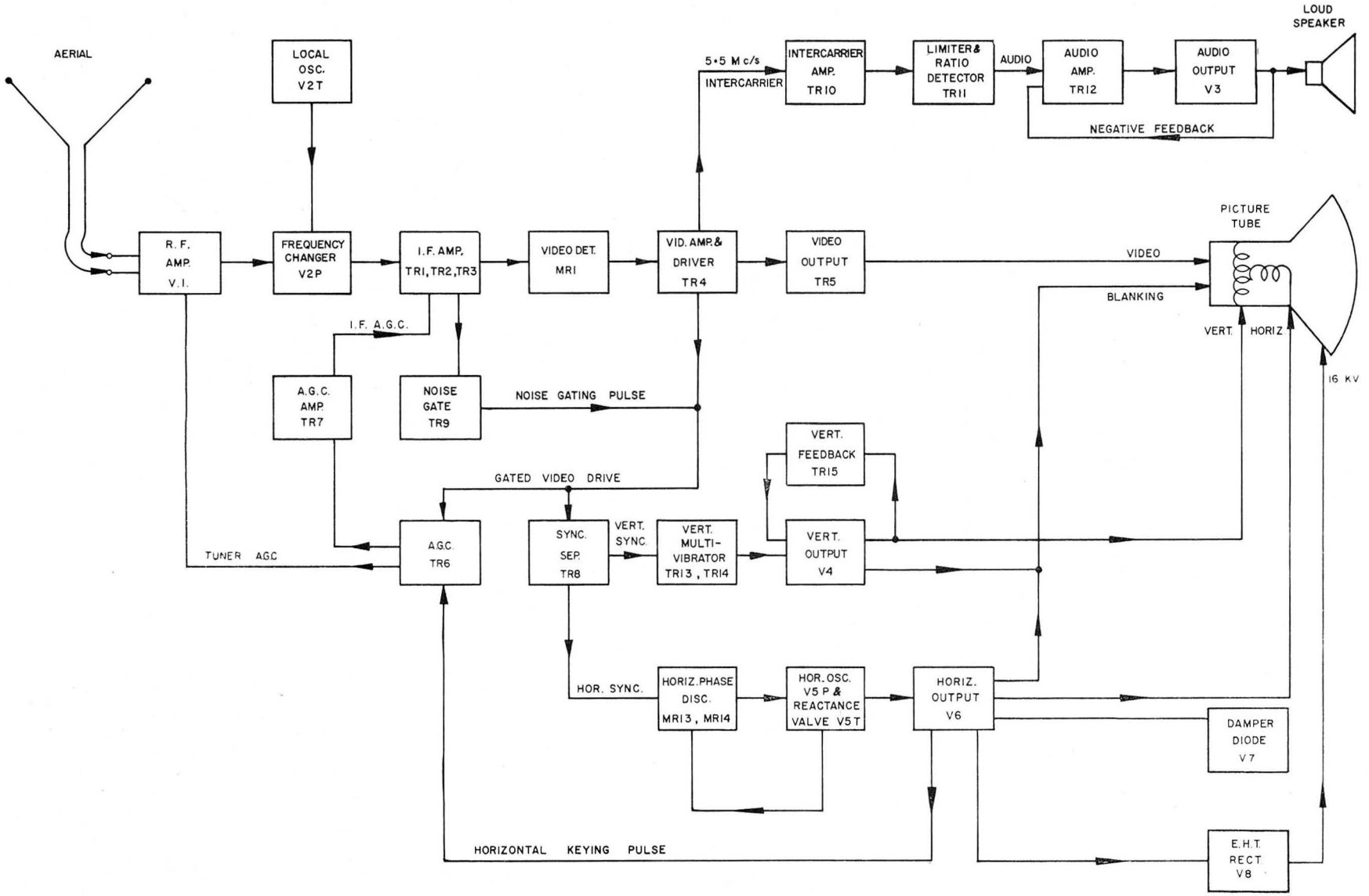

BLOCK DIAGRAM

CAUTION

The normal B+ voltages in these receivers are dangerous. Use extreme caution when servicing. The high voltage at the picture tube anode (16,000 volts) will give an unpleasant shock but does not supply enough current to give a fatal shock. However, secondary human reactions to otherwise harmless shocks have been known to cause injury.

Always discharge the picture tube to the chassis, or to its aquadag coating, before handling the tube. The picture tube is highly evacuated and, if broken, it may violently expel glass fragments. When handling the picture tube, always wear goggles.

CIRCUIT DESCRIPTION

R.F. INPUT

The input signal is applied through a centre-tapped transformer matched for 300 ohm input impedance to the neutralised triode RF amplifier type 6GK5 (V1). The gain of the amplifier is controlled by the negative AGC voltage applied to its grid.

The amplified RF signal is coupled to the grid of the frequency changer type 6HG8 (V2P). A direct connection to this grid (TP1) is brought out for I.F. alignment use. The output of the local oscillator section (V2T) is also coupled in, and mixing takes place in the grid circuit. A connection (TP2) to the screen of the pentode mixer is brought out for RF alignment use.

The I.F. component of the mixer current is selected by the anode coil, L2, and coupled to the I.F. amplifier TR1.

I.F. AMPLIFIER AND AGC AMPLIFIER

TR1 and TR2, the first two IF amplifiers, are connected in series across the low voltage rail, and their current is controlled by the output from the AGC amplifier, TR7 being applied to the base of TR1. TR1 and TR2 transistors type SE5002 are so-called "forward AGC types." This means that as the current in the transistor increases, the amplification is reduced. This requires a positive going potential on the base to reduce the gain. This is in the opposite sense to the requirements of the valve tuner, and is the reason for the inclusion of the AGC amplifier/inverter (TR7). A second function of this transistor, an SE1002, is to compensate for the change in current in the AGC-controlled transistors to maintain a constant load on the low voltage rail, independent of AGC and therefore of signal strength.

The output from the last IF amplifier, a BF184 (TR3), is detected by an OA90 (MR1) and a narrow band of frequencies from the output is also applied to the noise gate transistor TR9, an SE1002. The band of frequencies selected normally contains very small amounts of signal power, and sufficient signal is obtained to switch on TR9 only when impulse noise occurs, or when the receiver fine tuning is set too far from the normal position.

VIDEO DRIVER AND NOISE GATE

The detected video signal is applied to the video amplifier/driver transistor, an SE1002 (TR4). In the collector, an amplified video signal is developed across R38. This amplified video is used to drive sync. separator and AGC stages, and is gated by the noise gate transistor TR9. This video signal has positive sync. pulses. Without gating, impulse noise would appear as positive pulses, producing spurious sync. pulses and AGC voltage. When impulse noise switches on TR9, its collector falls, introducing a negative pulse to the video signal, which prevents generation of the spurious information. If the negative pulse is too great, it effectively removes the supply voltage to the driver, and interrupts the 5.5 Mc/s signal selected by IFT2 thereby introducing noise pulses in the audio section. This is prevented by the diode MR6 which limits the low voltage excursion of TR9 collector to approximately 14V.

A video output at low impedance is taken from the emitter of the video driver through a 5.5 Mc/s null trap to the base of the video output transistor, an SE7010 (TR5).

VIDEO OUTPUT

The picture control varies the gain of the output transistor TR5, by varying the emitter resistance, and therefore the amount of degeneration taking place in the emitter. The collector circuit has a peaking transformer to maintain a level frequency response over the video band. The signal applied to the base is proportioned, so that the black level of the picture is just at TR5 cut-off potential, and only the video information is amplified. As black level is at the cut-off potential, the gain control in the emitter does not affect the black information and gives a constant black level picture control. The proportioning of the video signal to achieve this, is controlled by the contrast range control in the AGC circuit.

GATED A.G.C.

The AGC transistor, an SE1002 (TR6), has the output of the video driver transistor applied to its base and a potential on its emitter, which is varied with the contrast

range control. The collector is supplied with positive gating pulses from the horizontal output transformer and only passes collector current during the time of this pulse. The pulses of current build up a negative charge on C63 which is used to control the tuner gain, and through the AGC amplifier, the IF gain. The value of collector current and therefore AGC voltage is controlled by the base-emitter potential. The emitter potential is set by the contrast range control, the base potential being the sync. tip voltage at the video driver output. Variations in signal strength increase or reduce the sync. tip height, thus altering the AGC produced with a consequent change of gain to compensate for the varying signal strength. The action of this feedback loop maintains the base-emitter potential at an almost constant value. Adjustment of the emitter potential with the contrast range control, is matched by variation of receiver gain, so that the output sync. tip varies the same amount to maintain this base-emitter potential. This control therefore acts as an amplitude control of the video out from the video driver. White level approximately represents zero signal in, and therefore remains fixed, and adjustment of signal amplitude is used as the means of setting the black level at the video output transistor cut-off.

The collector-base junction of a transistor is a diode which is back-biased, and collector current is in fact the leakage across this back-biased diode. If the potential across this diode is reversed, it will cause a high current to flow. The AGC potential would appear as just such a forward bias on the collector-base junction of the AGC transistor and would rapidly discharge the AGC voltage developed across C63. The diode MR4 prevents this action occurring, being biased off by the derived negative potential.

SYNC. SEPARATOR

The video output from the driver transistor is coupled through a capacitor to the base of the sync. separator transistor, an SE1002 (TR8). The base emitter diode d.c. restores the sync. tips to a potential just greater than the emitter potential. The current drawn by the base during sync. tips is the current amplified in the collector to produce a train of sync. pulses. The sync. pulses are then differentiated by C69-R71 for application to the horizontal phase discriminator, and integrated by R60-C80, R69-C67, R68-C66, to remove the horizontal sync. pulses for vertical triggering.

VERTICAL MULTIVIBRATOR AND OUTPUT

The AB1101 (MR10) is normally conducting, and shorting the input sync. line to earth. When the incoming sync. pulse is large enough to overcome the current in R90 and switch off the diode, the sync. pulse then appears across MR10 and passes on to the vertical multivibrator through the BA100 diode (MR11).

Two SE1002 transistors (TR13 and TR14) form a multivibrator to supply drive to the vertical output valve, a 6CW5 (V4).

During the scan period, TR13 is switched on and the emitter is at a potential determined by the bias components, R90B and R91. At this time, TR14 is switched off and the potential of its emitter is falling towards earth as C97 charges. The base of TR14 is connected to the collector of TR13, and the potential is determined by the drop across R93 and RV7, the vertical hold control. As TR14 emitter potential falls to a value approximately half a volt less than the base, the transistor starts to conduct , and the potential on the emitter reverses direction and rises. The rise in potential is coupled through C97 to the emitter of TR13, and reduces the current in it. The collector potential therefore rises further, switching on TR14. The action is cumulative and reverses the state of the transistors so that TR14 is on, and TR13 is off. TR13 emitter then starts to run down as C97 reverses its charge until TR13 once more switches on and returns the system to the original condition.

MR11 isolates the oscillator from the sync. feed until the end of the scan, when the return voltage of R90a drops below the bias potential on TR13 base.

MR12 prevents TR14 collector from dropping below the "knee" of the collector characteristic, thus isolating the timing components in the emitter from the collector circuit.

The collector circuit contains the capacitor C100 which is charged through the high value of collector resistor, and discharged by TR14 when it conducts during the flyback. The waveform across C100, corrected by a feedback waveform derived from the resistor in series with the yoke (R109) and amplified by TR15, is used to drive the vertical output valve V4.

The whole current of V4 is the current used by the printed board containing the transistor signal circuits, thus using the printed board as the cathode load of V4. The anode transformer (T3) drives the yoke, and an extra winding also provides vertical blanking for the picture tube.

HORIZONTAL PHASE DISCRIMINATOR AND OSCILLATOR

The AB1101 phase discriminator diodes (MR14 and MR15) have anti - phase sine waves applied from a balanced winding on the oscillator coil, with picture phasing set

by the integrators R116, C111 and R115 and RV3, C110. Using the sine-waves as the reference voltage, a negative going sync. pulse, differentiated by C69, R71 is applied to the junction of the diodes. When the oscillator and the sync. pulse are at the same frequency and in lock, there is zero output from the discriminator.

The triode section of the 6JW8 oscillator valve, V5, has its anode connected to one side of the oscillator coil, and its grid, through phase-shift network C117, R118, to the other. The signal current in the anode is therefore leading the anode voltage, and the valve has the effect of a capacitor across the tuned circuit. Variation of bias on the valve varies the magnitude of the current and of the effective capacitor, thus controlling frequency.

When the oscillator tends to run at a different frequency to the incoming sync. pulses, a positive or negative output is obtained from the discriminator which is applied to the reactance valve as bias, and varies the effective tuning capacity, bringing the oscillator back to frequency.

The oscillator is the cathode, grid and screen of the pentode section of V5 operating as a triode, with an electron coupled output taken from the anode to drive the horizontal output stage.

HORIZONTAL DEFLECTION CIRCUITS

The horizontal driver valve produces a negative pulse output which is timed to cut off the horizontal output valve at the end of the scan.

When cut off sharply, the magnetic field that has been established in the horizontal output transformer during the scan collapses and the oscillatory circuit comprised of the transformer inductance and stray capacitances tends to "ring." However, after one-half cycle of oscillation the damping diode starts to conduct. During the "flyback" time the magnetic energy has established itself in the reverse direction, and the picture tube spot has returned to the left-hand side of the screen.

When the damping diode conducts, it permits current to flow at a controlled rate through part of the transformer. This current, passed by the auto-transformer into the deflection coils, form the initial part of the horizontal scan. As the damper ceases to conduct the line output valve takes over and supplies the necessary current to complete the scan, at which point a further negative pulse on the grid starts the cycle over again.

During the flyback, a high voltage pulse is produced at the anode of the EHT rectifier, which is peak-rectified and then smoothed by the capacitance between inner and outer bulb coatings of the picture tube, and supplies EHT of approximately 16,000 volts.

Energy recovered by the damping diode produces a boosted HT voltage of 690 volts which is divided down to 540 volts for supplying the G2 electrode voltage of the picture tube.

INTERCARRIER AMP. AND LIMITER

The output from IFT2 is inductively coupled to the base of the SE1002 intercarrier amplifier (TR10). The collector load of TR10 is the base circuit of the limiter transistor, an SE1002 (TR11), which limits the positive excursion of the base signal by driving the collector below the knee, and the negative excursion by cut-off and the action of the AA119 diode (MR7). The bias for TR10 is derived from the emitter voltage of TR11, which stabilises the bias point for large variations of transistor characteristics. The collector load of TR11 is a ratio detector employing two transformers, IFT4 and IFT5, and the AA119 diodes (MR8 and MR9).

SOUND AMPLIFIER AND OUTPUT

The audio from the ratio detector is applied to the volume control RV6 and the required amount is amplified by an SE1002 transistor (TR12) and used to drive the sound output valve, a 6BQ5 (V3). Negative feedback from the output transformer is applied to the emitter of TR12 and stability at high frequencies is maintained by an auxiliary feedback loop round the output stage using C90.

DISMANTLING

TO REMOVE BACK

1. Disconnect aerial.
2. Remove four back-fixing screws.
3. Remove mains lead from its groove.

TO REMOVE THE EHT CAGE

1. Loosen the two screws at the base of the chassis back.
2. Remove the screw through the side panel.
3. Ease cage from chassis then lift, twisting it in an anti-clockwise direction.

TO REMOVE THE FRONT ESCUTCHEON

1. Pull off Channel Selector, Set Black, Picture, Volume and Off/On knobs.
2. Remove cabinet back as above.
3. With the handle in raised position, remove the five lug screws, and lift off.

TO REMOVE THE PICTURE TUBE

1. Remove front escutcheon and the Back as above.
2. Lay the picture tube on its face, remembering to protect its surface, and remove the four screws holding the picture tube. Lift off the chassis.

ADJUSTMENTS

HORIZONTAL OSCILLATOR. This is set at the factory and normally should not need further adjustment. However, after a change of components it may be necessary to re-adjust. The procedure is as follows:

Set the Horizontal Hold control to the mid-way position. The bias at the cathode of V5 should then be approximately 2.5 volts. Short the junction of R118 and R119 to earth and adjust L34 until the picture floats into lock.

Remove the shorting lead from the junction of R118 and R119. Short-circuit the sync. by earthing the junction of R63 and R64 (i.e., the base of the sync. transistor), and adjust RV3 until the picture again floats into lock.

Remove the short-circuit and check that no delay in picture locking occurs when the channel switch is operated.

CONTRAST RANGE. First adjust the Set-Black control so that the picture information, which is normally black, is turned up to grey. Using the Vertical Hold control, roll the picture until the vertical blanking bar is visible in the centre of the screen. Adjust RV1 so that the sync. pulse is seen to be a little darker than the surrounding grey blanking bar. Return the Set-Black and Vertical Hold controls to the normal settings.

A.G.C. The pre-set AGC control should be set, when necessary, to the weakest signal, i.e., that displaying the most "snow" or grey to white flecks in the picture. Adjust the control to the position which just reduces the snow to a minimum.

FOCUS. The only time that focus adjustment may be necessary is after replacement of the picture tube. The focus potentiometer (RV11), which is a strip pre-set type, is located underneath the chassis near the front edge and is accessible when the back is removed. Adjust for overall focus across the picture tube face.

LINEARITY. Before adjusting either vertical or horizontal linearity, the picture shift magnets should be neutralised. To do this, the two magnets should be rotated with respect to each other. The neutralised setting is such that, when both magnets are rotated together, they have little effect on the picture position.

After adjustment has been made for best linearity, the picture may need re-centring. The linearity should be retouched where necessary.

VERTICAL. The vertical linearity pre-set potentiometer RV9 is located on the R.H. sub-chassis (viewed from the back). For best linearity, RV9 should be adjusted in conjunction with the HEIGHT control, using a pattern on the screen.

HORIZONTAL. The horizontal linearity coil L35 is situated underneath the main chassis near V6, and may be adjusted from the rear. The core should be adjusted for best linearity, using a pattern on the screen. Two positions of the core provide good linearity, but the position in which the core is farthest out of the coil is the correct one.

PICTURE CENTRING. The picture may be centred by rotating the two shift magnets on the tube neck, behind the deflection yoke. Rotate both magnets together to shift the picture in the required direction, and move one magnet with respect to the other, to change the strength of the field, and so the amount of picture shift.

INTERCARRIER I.F. ALIGNMENT

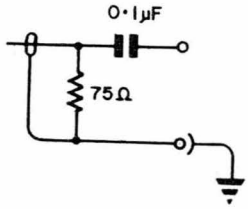

Fig. 1.

The following equipment is necessary:

(1) 5.5 Mc/s sweep.
(2) Injection probe (Fig. 1).
(3) Attenuator.
(4) Display unit.
(5) Detector (Fig. 2).

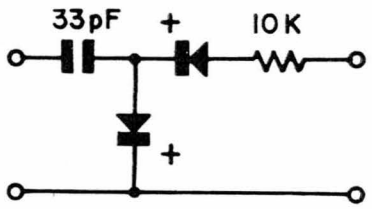

Fig. 2.

STAGE 1

5.5 Mc/s Trap

(a) Inject 5.5 Mc/s Sweep through probe of Fig. 1 to junction of L29 and R36 (base of TR4). Connect detector (Fig. 2) to collector of video output (TR5) and connect the display unit to the output of the detector.

(b) Adjust the slug in L30 for a minimum of output at 5.5 Mc/s.

STAGE 2

Intercarrier I.F.

(a) Remove the detector from collector of video output transistor and reconnect it to collector of TR10.

(b) Adjust level of input such that the detected output is below limiting in the amplifier. Then adjust the slugs of IFT2 and IFT3 to produce a symmetrical response about 5.5 Mc/s, which should be slightly over-

coupled and with a bandwidth of 200 Kc/s.

(c) Remove detector from collector of TR10 and connect it to collector of TR11. With the input adjusted so that the intercarrier amp. does not limit, tune the slug of IFT4 for a maximum output at 5.5 Mc/s.

STAGE 3

Ratio Detector

(a) Remove detector from TR11 and connect the display unit only to junction of R81 and C87. Increase input so that the amplifier limits.

(b) Tune slug in IFT5 to produce an S response that is symmetrical, and zero at 5.5 Mc/s.

VISION I.F. ALIGNMENT

The following equipment is necessary:

(1) I.F. Sweep.

(2) I.F. injection probe (Fig. 1).

(3) Attenuator.

(4) Display unit.

(5) 0 - 5 volt bias supply.

STAGE 1

(a) Connect the display unit to junction of L29 and R36 and set Y amp to give full deflection with 2 volts input.

(b) Open cut link connected to C40.

(c) Using probe of Fig. 1 and attenuator, inject I.F. sweep into last stage by connecting between C40 and earth strip.

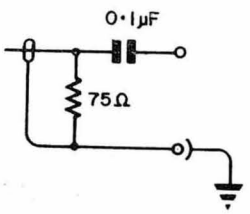

Fig. 1.

(d) Connect +2.5 volts of bias to junction of R23 and R61.

(e) Set attenuator to give full deflection on display and tune L27 to a maximum at 34.625 Mc/s. Tune IFT1 to produce a symmetrical response about 34.625 Mc/s. If a hole appears in the response it can be removed by detuning L32.

(f) Adjust L28 to give the desired bandwidth, and L27 and IFT1 to produce the I.F. response shape as shown in curve A.

STAGE 2

(a) Remove probe from C40 and reconnect link.

(b) Connect probe between tuner test point and earth, set attenuator to give full deflection on display. Switch tuner to channel 12 (blank channel).

(c) Tune L15 (located on tuner) to peak the response at 34.625 Mc/s and then tune L21 for a symmetrical response.

(d) Tune L25 and L26 to peak response at 34.625 Mc/s and then retune L15 and L21 to produce the response shape of curve B.

STAGE 3 (TRAPS)

(a) Adjacent Sound Carrier.

Tune L22 to 38.375 Mc/s and C23 for maximum rejection.

(b) Sound Carrier.

Tune L24 to 31.375 Mc/s (Response should be 22 db down).

(c) Noise Gate.

Tune L32 to approximately 32.5 Mc/s so that it falls 6 db below peak response.

(d) Adjacent Vision Carrier.

Tune L23 to 28.875 Mc/s. It may now be necessary to retune L21 so that the response of Curve C is produced.

STAGE 4

Check that maximum gain occurs at +1.7 volts and that the response shape remains substantially unchanged between +1.7 volts and 4 volts.

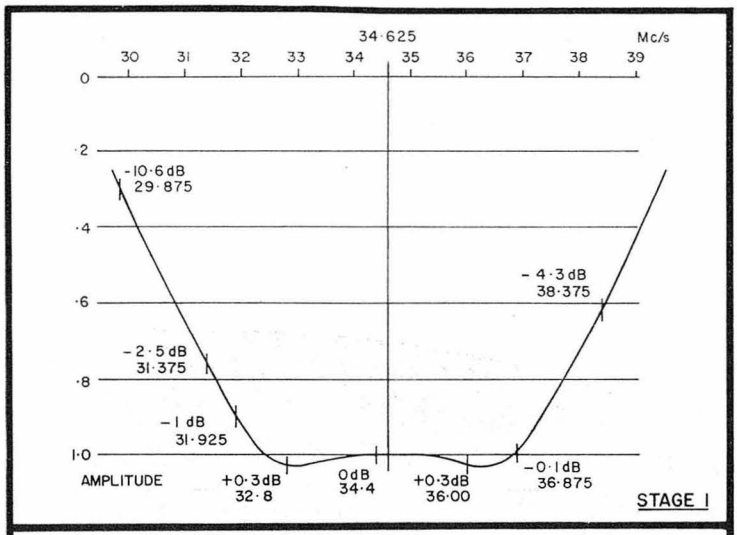

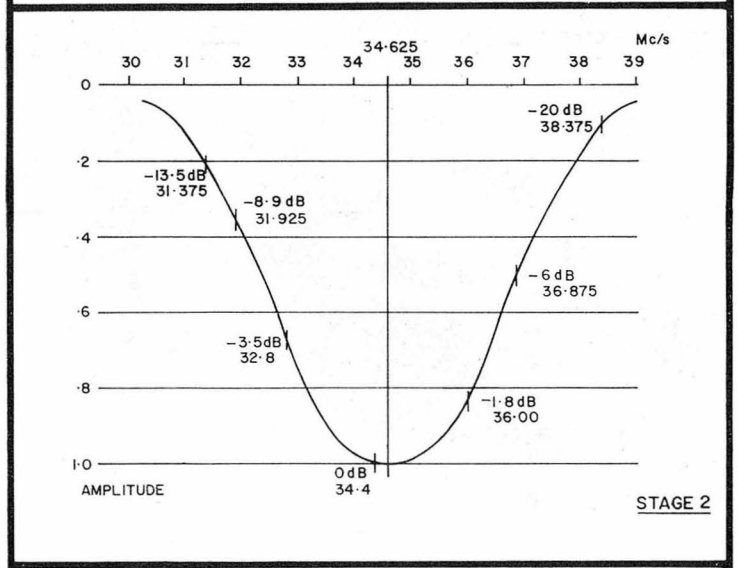

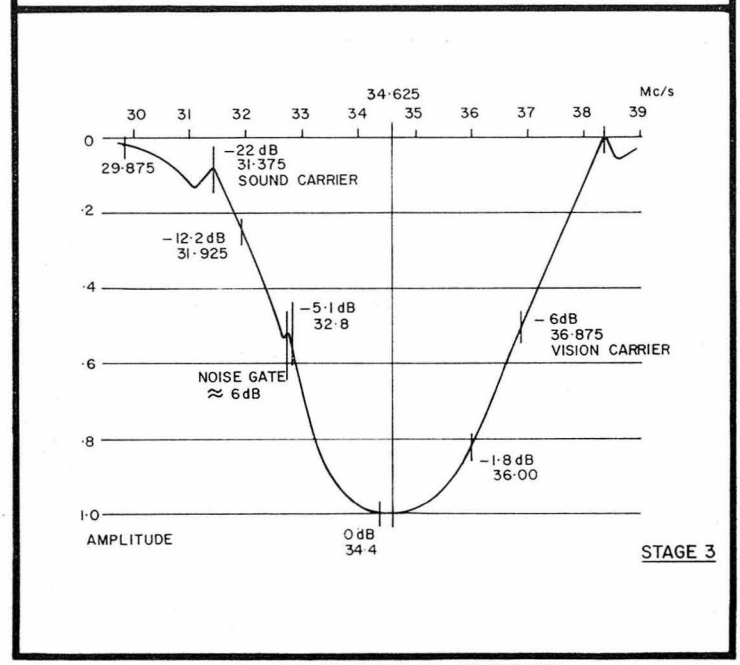

I.F. ALIGNMENT CURVES

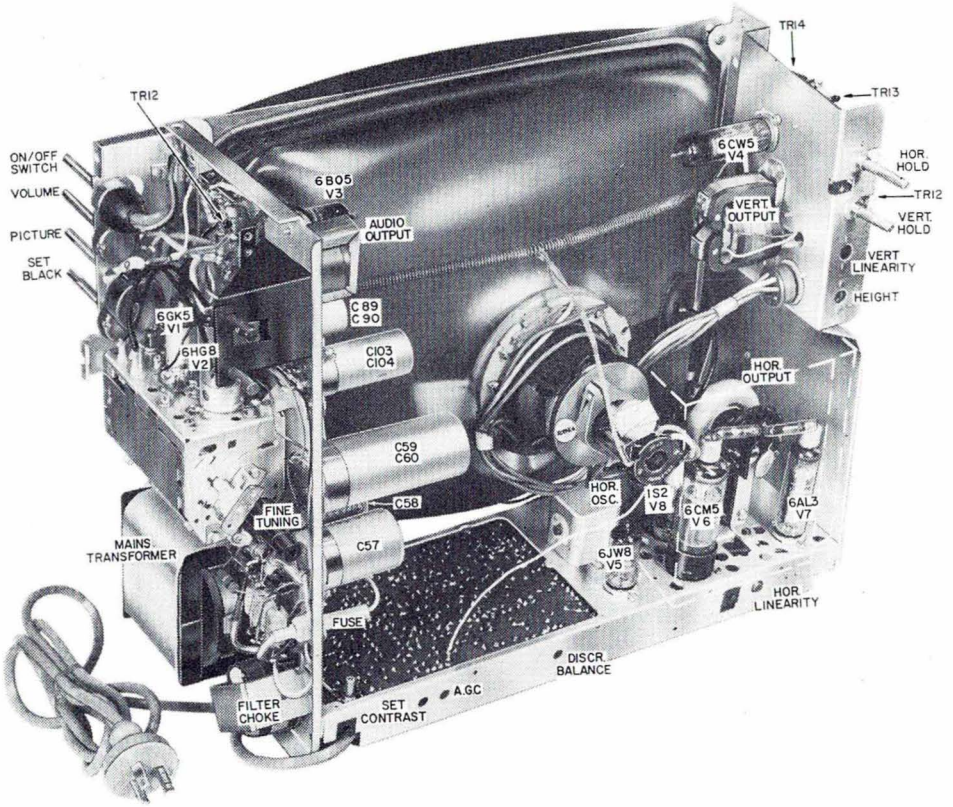
TR14
TR13
TR12
ON/OFF SWITCH
VOLUME
PICTURE
SET BLACK
6BO5 V3
AUDIO OUTPUT
6CW5 V4
VERT. OUTPUT
HOR. HOLD
TR12
VERT. HOLD
VERT LINEARITY
HEIGHT
6GK5 V1
6HG8 V2
C89 C90
C103 C104
HOR. OUTPUT
C59 C60
C58
FINE TUNING
HOR. OSC.
1S2 V8
6CM5 V6
6AL3 V7
MAINS TRANSFORMER
C57
6JW8 V5
HOR LINEARITY
FUSE
DISCR. BALANCE
A.G.C.
FILTER CHOKE
SET CONTRAST

REAR VIEW

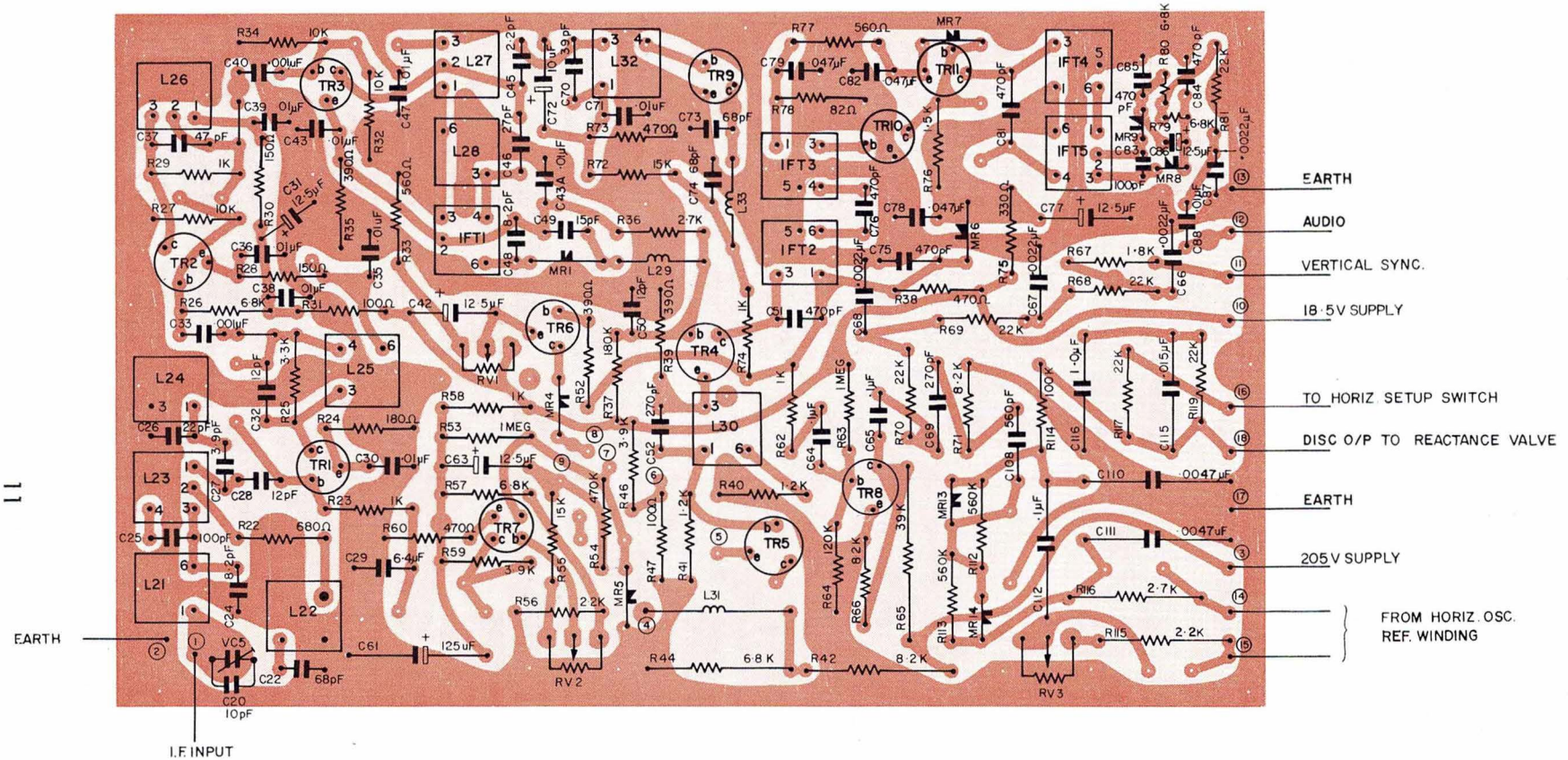

8, 9 } A.G.C. KEYING PULSE

7 A.G.C. TO TUNER

5, 6 } PICTURE CONTROL

4 VIDEO OUTPUT

PRINTED CIRCUIT BOARD (VIEWED FROM COPPER SIDE)

PARTS LIST — MODEL W1-E1

RESISTORS

Note: All resistors are ½ watt rating, except where noted

REF.	PART NO.	DESCRIPTION
R21	750-0362	2.7K ohms ± 10% 5 watt
R22	740-0682	680 ohms ± 10%
R23	740-0022	1K ohm ± 10%
R24	740-1162	180 ohms ± 10%
R25	740-0052	3.3K ohms ± 10%
R26	740-0382	6.8K ohms ± 10%
R27	740-0082	10K ohms ± 10%
R28	740-0272	150 ohms ± 10%
R29	740-0022	1K ohm ± 10%
R30	740-0272	150 ohms ± 10%
R31	740-0652	100 ohms ± 10%
R32	740-0082	10K ohms ± 10%
R33	740-0262	560 ohms ± 10%
R34	740-0082	10K ohms ± 10%
R35	740-0002	390 ohms ± 10%
R36	740-0042	2.7K ohms ± 10%
R37	740-0222	180K ohms ± 10%
R38	740-0012	470 ohms ± 10%
R39	740-0002	390 ohms ± 10%
R40	740-0322	1.2K ohms ± 10%
R41	740-0322	1.2K ohms ± 10%
R42	750-0632	8.2K ohms ± 10% 4 watt Metox
R43	742-0812	1.5 Meg. ± 20% 1 watt
R44	750-0782	6.8K ohms ± 10% 4 watt Metox
R45		
R46	740-0062	3.9K ohms ± 10%
R47	740-0652	100 ohms ± 10%
R48	740-0692	150 ohms ± 20%
R49	740-0692	150 ohms ± 20%
R50	750-0682	300 ohms ± 10% 5 watt
R51	750-0662	3.9K ohms ± 10% 4 watt
R52	740-0002	390 ohms ± 10%
R53	740-0532	1 megohm ± 20%
R54	740-0622	470K ohms ± 20%
R55	740-0092	15K ohms ± 10%
R56	740-0032	2.2K ohms ± 10%
R57	740-0382	6.8K ohms ± 10%
R58	740-0022	1K ohm ± 10%
R59	740-0062	3.9K ohms ± 10%
R60	740-0012	470 ohms ± 10%
R61	740-0062	3.9K ohms ± 10%
R62	740-0022	1K ohm ± 10%
R63	740-0532	1 megohm ± 20%
R64	740-0782	120K ohms ± 10%
R65	750-0942	39K ohms ± 10% 4 watt Metox
R66	740-0792	8.2K ohms ± 10%
R67	740-0302	1.8K ohms ± 10%
R68	740-0102	22K ohms ± 10%
R69	740-0102	22K ohms ± 10%
R70	740-0102	22K ohms ± 10%
R71	740-0792	8.2K ohms ± 10%
R72	740-0092	15K ohms ± 10%

RESISTORS (continued)

REF.	PART NO.	DESCRIPTION
R73	740-0012	470 ohms ± 10%
R74	740-0022	1K ohm ± 10%
R75	740-0922	330 ohms ± 10%
R76	740-0252	1:5K ohms ± 10%
R77	740-0262	560 ohms ± 10%
R78	740-0662	82 ohms ± 10%
R79	740-0382	6.8K ohms ± 10%
R80	740-0382	6.8K ohms ± 10%
R81	740-0102	22K ohms ± 10%
R82	742-0722	560K ohms ± 10% 1 watt
R82a	740-0222	180K ohms ± 10%
R83	740-1492	6.8 Megohms ± 10%
R84	740-0362	390K ohms ± 10%
R85	740-0022	1K ohm ± 10%
R85a	740-0292	270 ohms ± 10%
R86	740-1052	330K ohms ± 20%
R86a	740-0512	100K ohms ± 20%
R87	740-0282	220 ohms ± 10%
R88	742-0022	4.7K ohms ± 10% 1 watt
R89	740-0062	3.9K ohms ± 10%
R90	740-0222	180K ohms ± 10%
R90a	740-0242	33K ohms ± 10%
R90b	740-0112	27K ohms ± 10%
R91	740-0242	33K ohms ± 10%
R92	740-0032	2.2K ohms ± 10%
R93	740-0022	1K ohm ± 10%
R93a	740-0792	8.2K ohms ± 10%
R94	740-0242	33K ohms ± 10%
R95	740-0072	4.7K ohms ± 10%
R96	742-1182	2.7M ± 10% 1 watt
R97	740-0752	68K ohms ± 10%
R98	740-0412	820 ohms ± 10%
R99	740-0272	150 ohms ± 10%
R100	740-0042	2.7K ohms ± 10%
R101	750-0642	15K ohms ± 10% 4 watt
R102	740-0142	100K ohms ± 10%
R103		
R104	740-0072	4.7K ohms ± 10%
R105	740-0122	47K ohms ± 10%
R106	740-0202	2.2M ± 10%
R107	750-0952	270 ohms ± 10% 4 watt Metox
R108	740-0102	22K ohms ± 10%
R109	746-0242	1 ohm ± 10%
R110	742-0642	180K ohms ± 10% 1watt
R111	742-0492	68K ohms ± 10% 1 watt
R112	740-0852	560K ohms ± 10%
R113	740-0852	560K ohms ± 10%
R114	740-0512	100K ohms ± 20%
R115	742-0512	2.2K ohms ± 10% 1 watt
R116	742-1192	2.7K ohms ± 10% 1 watt
R117	740-0102	22K ohms ± 10%
R118	740-0732	12K ohms ± 10%
R119	740-0102	22K ohms ± 10%
R120	740-0412	820 ohms ± 10%
R121	740-0322	1.2K ohms ± 10%

PARTS LIST — MODEL W1-E1 (continued)

RESISTORS (continued)

REF.	PART NO.	DESCRIPTION
R122	742-0792	68K ohms ± 10% 1 watt
R123	742-0172	470K ohms ± 10% 1 watt
R124	740-0062	3.9K ohms ± 10%
R125	742-0092	47K ohms ± 10% 1 watt
R126	742-0042	15K ohms ± 10% 1 watt
R127	740-1392	470 ohms ± 20%
R128	742-0722	560K ohms ± 10% 1 watt
R129	750-0902	4.7K ohms ± 10% 4 watt
R130	750-0602	22 ohms ± 10% 5 watt
R131	742-0142	270K ohms ± 10% 1 watt
R132	742-1092	3.3 Megohms ± 20% 1 watt
R133	742-0022	4.7K ohms ± 10% 1 watt
R134	740-1722	22 ohms ± 20%
R135	742-0402	150K ohms ± 20% 1 watt

CAPACITORS

REF.	PART NO.	DESCRIPTION
C20	271-0601	10pF ± 5% Ceramic Disc NPO
C21	271-0911	.003uF 500V Ceramic Tube or Disc
C22	271-1341	68pF ± 10% Ceramic Tube
C23		
C24	271-0941	8.2pF ± ½pF NPO Ceramic Disc
C25	271-0771	100pF ± 5% NPO Ceramic Disc
C26	271-1301	22pF ± 10% NPO Ceramic Disc
C27	271-0691	3.9pF ± ¼pF NPO Ceramic Disc
C28	271-0681	12pF ± 5% NPO Ceramic Disc
C29	269-1321	6.4uF +80% —20% 25V Electro
C30	271-1201	.01uF +100% —0% 50V Ceramic
C31	269-1251	50uF 25VW Electro
C32	271-0681	12pF ± 5% NPO Ceramic Disc
C33	271-1211	.001uF Ceramic Tube
C34		
C35	271-1201	.01uF +100% —0% 50V Ceramic
C36	271-1201	.01uF +100% —0% 50V Ceramic
C37	271-1621	47pF ± 10% NPO Ceramic Disc
C38	271-1201	.01uF +100% —0% 50V Ceramic
C39	271-1201	.01uF +100% —0% 50V Ceramic
C40	271-1211	.001uF Ceramic Tube
C41		
C42	269-1211	12.5uF 25VW Electro
C43	271-1201	.01uF +100% —0% 50V Ceramic

CAPACITORS (continued)

REF.	PART NO.	DESCRIPTION
C43a	271-1201	.01uF +100% —0% 50V Ceramic
C44		
C45	271-1691	2.2pF ± ¼pF NPO Ceramic Disc or Bead
C46	271-0311	27pF ± 5% Ceramic Tube
C47	271-1201	.01uF +100% —0% 50V Ceramic
C48	271-0941	8.2pF ± ½pF NPO Ceramic Disc
C49	271-0181	15pF ± ½pF NPO Ceramic Tube
C50	271-0681	12pF ± 5% NPO Ceramic Disc
C51	280-3401	470pF ± 10% 100V Styro-seal
C52	280-3121	270pF ± 10% 125VW Styro-seal
C53		
C54	283-1241	0.1uF ± 10% 160V Polyester
C55	271-0781	.035uF ± 2KVW Ceramic Double Disc
C56	271-0781	.035uF ± 2KVW Ceramic Double Disc
C57	269-0521	100uF 150VW Electro
C58	269-0521	100uF 150VW Electro
C59	269-0901	200uF 275V Electro
C60		60uF 275V Electro
C61	269-0871	125uF 16V Electro
C62	283-1241	0.1uF ± 10% 160V Polyester
C63	269-1421	8uF 40V Electro
C64	271-1561	0.1uF ± 20% 25V Ceramic Disc Redcap
C65	283-5741	0.1uF ± 100% 50V Polyester
C66	271-1571	.0022uF ± 10% Ceramic Disc
C67	271-1571	.0022uF ± 10% Ceramic Disc
C68	271-1571	.0022uF ± 10% Ceramic Disc
C69	280-3121	270pF ± 10% 125VW Styro-seal
C70	271-1681	39pF ± 10% NPO Ceramic Disc
C71	271-1201	.01uF +100% —0% 50V Ceramic
C72	269-1051	10uF 6V Electro
C73	271-1341	68pF ± 10% Ceramic Tube
C74	271-1341	68pF ± 10% Ceramic Tube
C75	280-3401	470pF ± 10% 100V Styro-seal
C76	280-3401	470pF ± 10% 100V Styro-seal
C77	269-1211	12.5uF 25VV Electro
C78	271-0731	.047uF +80% —20% 25V Ceramic Disc Redcap

PARTS LIST — MODEL W1-E1 (continued)

CAPACITORS (continued)

REF.	PART NO.	DESCRIPTION
C79	271-0731	.047uF +80% —20% 25V Ceramic Disc Redcap
C80		
C81	280-3401	470pF ± 10% 100V Styroseal
C82	271-0731	.047uF +80% —20% 25V Ceramic Disc Redcap
C83	280-3131	100pF ± 5% 100V Styroseal
C84	280-3401	470pF ± 10% 100V Styroseal
C85		
C86	269-1211	12.5uF 25VW Electro
C87	271-1571	.0022uF ± 10% Ceramic Disc
C88	283-1121	.01uF ± 10% 160V Polyester
C89	283-1201	.047uF ± 10% 160V Polyester
C90	271-1631	18pF 500V 10% Ceramic Tube
C91	269-0931	25uF 25V Electro
C92	269-1161	16uF 250V Electro
C93		8uF 250V Electro
C94	283-1121	.01uF ± 10% 160V Polyester
C95	269-0871	125uF 16V Electro
C96	271-0911	.003uF 500V Ceramic Tube or Disc
C97	283-1361	1.0uF ± 10% 160V Polyester
C98	271-1651	.0047uF +50% —20% 1000V Ceramic Tube
C99	271-1201	0.01uF +100% —0% 50V Ceramic
C100	283-1201	.047uF ± 10% 160V Polyester
C101	283-1161	.022uF ± 10% 160V Polyester
C102	283-1581	.0047pF ± 10% 400V Polyester
C103	269-1371	25uF 300VW Electro
C104		50uF 300VW Electro
C105	269-0971	2000uF 25VW Electro
C106	283-1241	.1uF ± 10% 160V Polyester
C107		
C108	271-0961	560pF ± 10% Ceramic Tube
C109		
C110	280-3441	.0047uF ± 5% 50V Styroseal
C111	280-3441	.0047uF ± 5% 50V Styroseal
C112	283-1241	.1uF ± 10% 160V Polyester
C113		
C114		
C115	283-1141	.015uF ± 10% 160V Polyester
C116	280-5241	1.0uF ± 20% 50V Metalised Lacquer
C117	271-0571	22pF ± 10% NPO Ceramic Tube
C118	283-1361	1.0uF ± 10% 160V Polyester
C119	280-1101	.0068uF ± 10% 400V Styroseal

CAPACITORS (continued)

REF.	PART NO.	DESCRIPTION
C120	280-1091	.0056uF ± 10% 400V Styroseal
C120a	271-0911	.003uF 500V Ceramic Tube or Disc
C121	271-1241	820pF ± 20% Ceramic Tube
C122	280-1861	820pF ± 10% 400V Polyester
C123	283-1581	.0047pF ± 10% 400V Polyester
C124	283-1661	.022uF ± 10% 400V Polyester
C125	284-2721	.068uF ± 10% 1000V Polyester
C126	271-0901	68pF ± 20% 3KVW Ceramic Disc
C127	284-2711	.056uF ± 10% 1000V Dual Dielectric
C128	284-1281	.22uF ± 20% 1000V Dual Dielectric
C129	283-1701	.047uF 500V Dual Dielectric
C130	271-0911	.033uF 500V Ceramic Tube or Disc
C131	271-0911	.033uF 500V Ceramic Tube or Disc
C132	283-1701	.047uF ± 10% 400V Polyester

COILS

L21	259-1711	IF Input Coil
L22	259-1791	Trap 4 (adjacent sound) Coil
L23	259-1771	Trap 1 (adjacent vision) Coil
L24	259-1761	Trap 2 (sound carrier) Coil
L25	259-1721	1st IF Coil Collector
L26	259-1731	2nd IF Coil Collector
L27	259-1741	3rd IF Coil Collector
L28	259-1751	IF Coupling Coil
L29	259-1871	Filter Coil
L30	259-1801	Trap 5 (5.5 meg. trap) Coil
L31	259-1821	Video Collector Coil
L32	259-1781	Trap 3 (noise gate) Coil
L33	259-1812	Filter Coil
L34	259-1881	Horizontal Oscillator Coil
L35	259-1252	Linearity Coil
L36	259-0045	Antiparasitic Coil
L37	259-0045	Antiparasitic Coil

POTENTIOMETERS

RV1	677-1541	500 ohms CTS Curve 'D' (linear)—Contrast Range
RV2	677-1631	1.5K ohms CTS Curve 'D' (linear)—AGC
RV3	677-1621	1K ohm CTS Curve 'D' (linear) Discriminator Balance
RV4	677-1501	500K ohms Curve 'A'—Set Black
RV5	677-1511	1K ww Curve 'A'—Picture

POTENTIOMETERS (continued)

REF.	PART NO.	DESCRIPTION
RV6	677-1481	250K ohms Curve 'C'—Volume
RV7	677-1491	500 ohms Curve 'A'—Vertical Hold
RV8	677-1641	2 Megohms Curve 'A'—Height
RV9	677-0172	25K ohms Curve 'A'—Vertical Linearity
RV10	677-1521	100K ohms Curve 'A'—Horizontal Hold
RV11	677-0891	2 Megohms Curve 'A' Strip—Focus.

TRANSFORMERS

REF.	PART NO.	DESCRIPTION
T1	904-0541	Power Transformer
T2	905-0661	Audio Output Transformer
T3	905-0672	Vertical Output Transformer
T4	908-0851	Horizontal Output Transformer
IFT1	906-0871	Vision IFT1 Transformer
IFT2	906-0881	Inter Carrier IFT2 Transformer
IFT3	906-0891	Inter Carrier IFT3 Transformer
IFT4	906-0801	Ratio Detector IFT4 Transformer
IFT5	906-0911	Ratio Detector IFT5 Transformer

VALVES AND TRANSISTORS

REF.	PART NO.	DESCRIPTION
TR1	932-2831	SE5002—1st IF Amplifier
TR2	932-2831	SE5002—2nd IF Amplifier
TR3	932-2921	BF184 —3rd IF Amplifier
TR4	932-2711	SE1002—Video Driver
TR5	932-2851	SE7010—Video Output
TR6	932-2711	SE1002—AGC
TR7	932-2711	SE1002—AGC Amplifier
TR8	932-2711	SE1002—Sync. Separator
TR9	932-2711	SE1002—Noise Gate
TR10	932-2711	SE1002—Inter Carrier Amp.
TR11	932-2711	SE1002—Limiter
TR12	932-2711	SE1002—Audio Amplifier
TR13	932-2711	SE 1002—Vert. Multivibrator
TR14	932-2711	SE 1002—Vert. Multivibrator
TR15	932-2711	SE1002—Vertical Feedback Amplifier
V1	932-2941	6GK5—RF Amplifier
V2	932-1921	6HG8—Frequency Changer
V3	932-1051	6BQ5—Audio Output
V4	932-1111	6CW5—Vertical Output
V5	932-2371	6JW8—Horizontal Oscillator and Reactance Valve
V6	932-0531	6CM5—Horizontal Output
V7	932-1151	6AL3—Damper Diode
V8	932-0771	1S2—EHT Rectifier

DIODES

REF.	PART NO.	DESCRIPTION
MR1	932-0971	OA90—Video Detector
MR2	932-1071	OA210—HT Rectifier
MR3	932-1071	OA210—HT Rectifier
MR4	932-2031	OA91—AGC Stand Off Diode
MR5	932-2451	BA100—Delay Diode
MR6	932-2601	AB1101—Noise Gate Catcher
MR7	932-2271	AA119—Limiter Diode
MR8	932-2271	AA119—Ratio Detector Diode
MR9	932-2271	AA119—Ratio Detector Diode
MR10	932-2601	AB1101—Sync Clipper
MR11	932-2451	BA100—Sync. Gate
MR12	932-2601	AB1101—Vertical Drive Catcher
MR13	932-2631	OA202—Blanking Clamp
MR14	932-2601	AB1101—Phase Discriminator
MR15	932-2601	AB1101—Phase Discriminator

MISCELLANEOUS

REF.	PART NO.	DESCRIPTION
VC5	281-0391	C004—Capacitor Trimmer
SW1	855-0781	Switch, Off/On
FS1	431-0071	Fuse, 1 amp.
CH1	232-0351	HT Filter Choke
VDR1	750-0691	Voltage Dependent Resistor, Type E298 ED/A262
VDR2	750-0611	Voltage Dependent Resistor, Type E299 DE/P350
	106-0071	Aerial Assembly Telescopic with MTG and Lug screw
	148-5751	Bracket Tuner Mounting
	148-5761	Bracket Aerial MTG
	148-5801	Bracket Aerial Terminal MTG
	190-3121	Cabinet Back
	224-2041	Chassis Assembled and Wired MSP Tuner, type TB14
	259-1661	Coil Deflector Yoke Rola TV 2064 with 7" leads
	403-3081	Escutcheon Assembly
	470-0241	Handle Assembly
	517-2631	Knobs
	517-2661	Assembly Channel Selector Knob
	794-1901	Scale Control Indication
	831-2601	Ear Piece with lead and plug
	824-1161	Socket, Miniature Jack Type SG1003
	831-2511	BK Speaker, 5" x 3" MSP, Type 53LB15 15 ohms
	895-0031	Terminal MSP 5458 Spring
	932-2791	CRT Shelbond 17", Thomas 17RVP4.

H. CLARK PTY. LTD.
Printers
MARRICKVILLE, N.S.W.

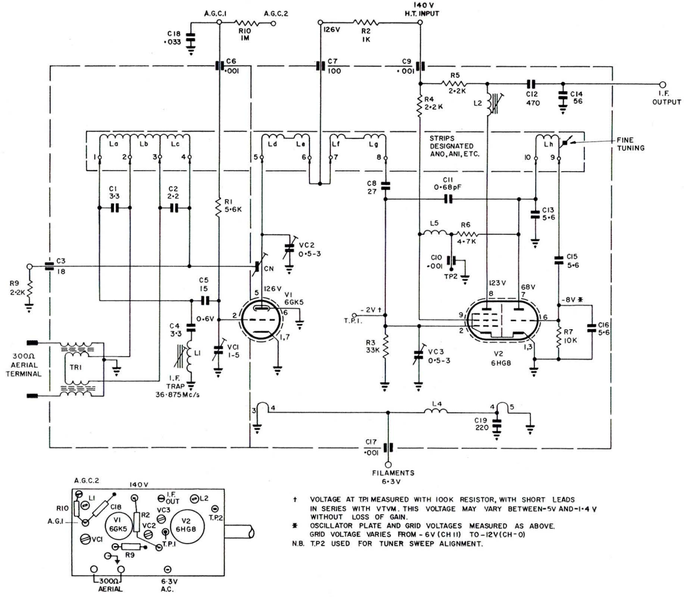

† VOLTAGE AT TP1 MEASURED WITH 100K RESISTOR, WITH SHORT LEADS IN SERIES WITH VTVM. THIS VOLTAGE MAY VARY BETWEEN −5V AND −1·4 V WITHOUT LOSS OF GAIN.
* OSCILLATOR PLATE AND GRID VOLTAGES MEASURED AS ABOVE. GRID VOLTAGE VARIES FROM −6V (CH 11) TO −12V (CH−0)
N.B. TP2 USED FOR TUNER SWEEP ALIGNMENT.

TUNER — TYPE TB14

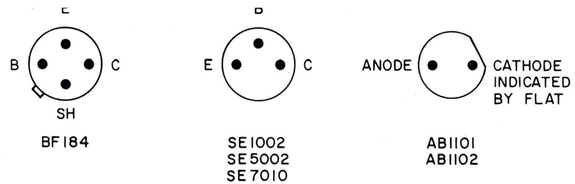

SEMI — CONDUCTOR CONNECTIONS
VIEWED ON FREE END OF LEADS

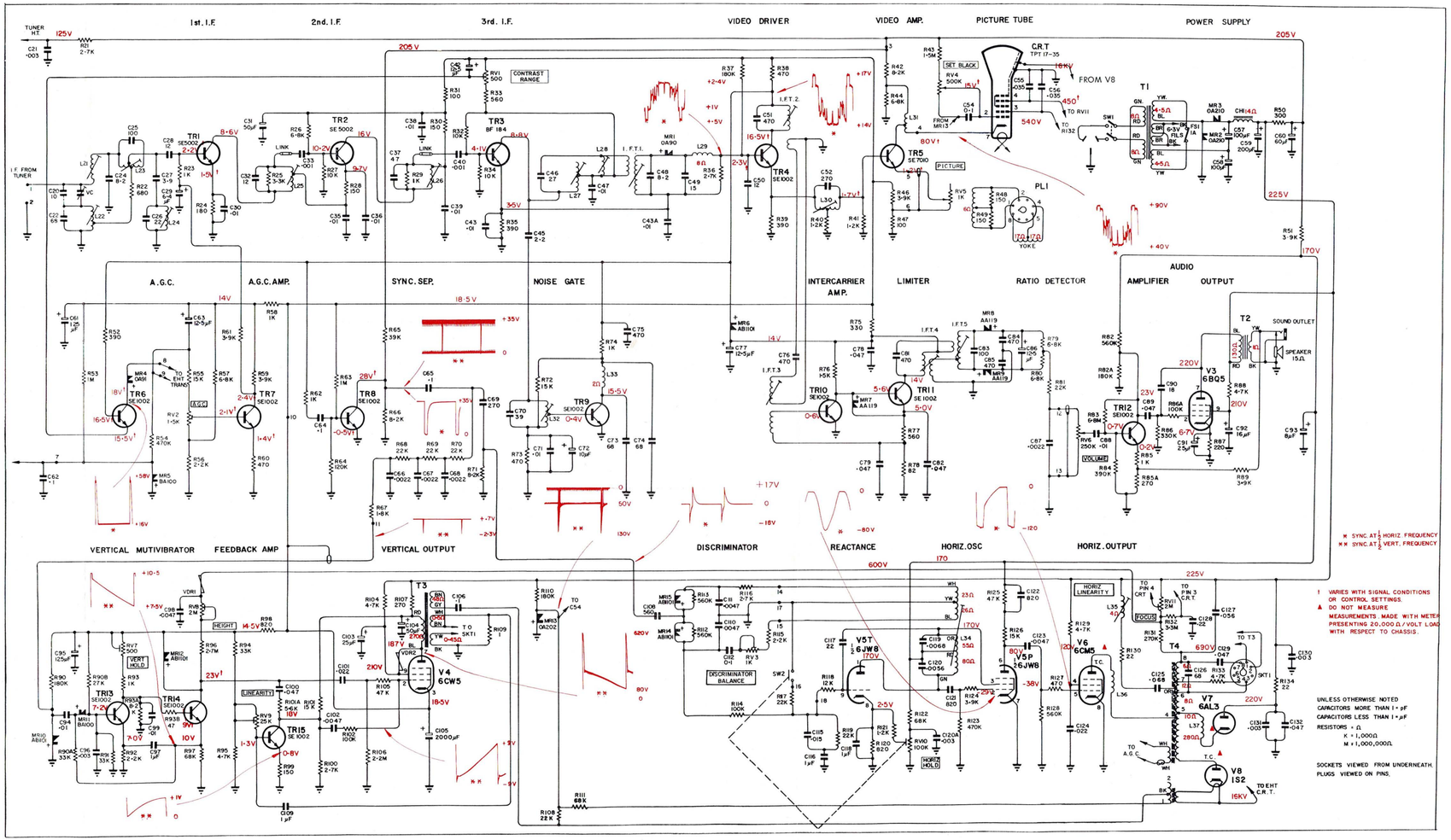

C63, 12.5uF 25V Electro has been changed to 8uF 40V Electrolytic (E.M.I. Part No. 269-1421).
A resistor R135, 150K ± 20% BTA (E.M.I. Part No. 742-0402) has been added in series with lead from potentiometer RV11 to pin 4 CRT.