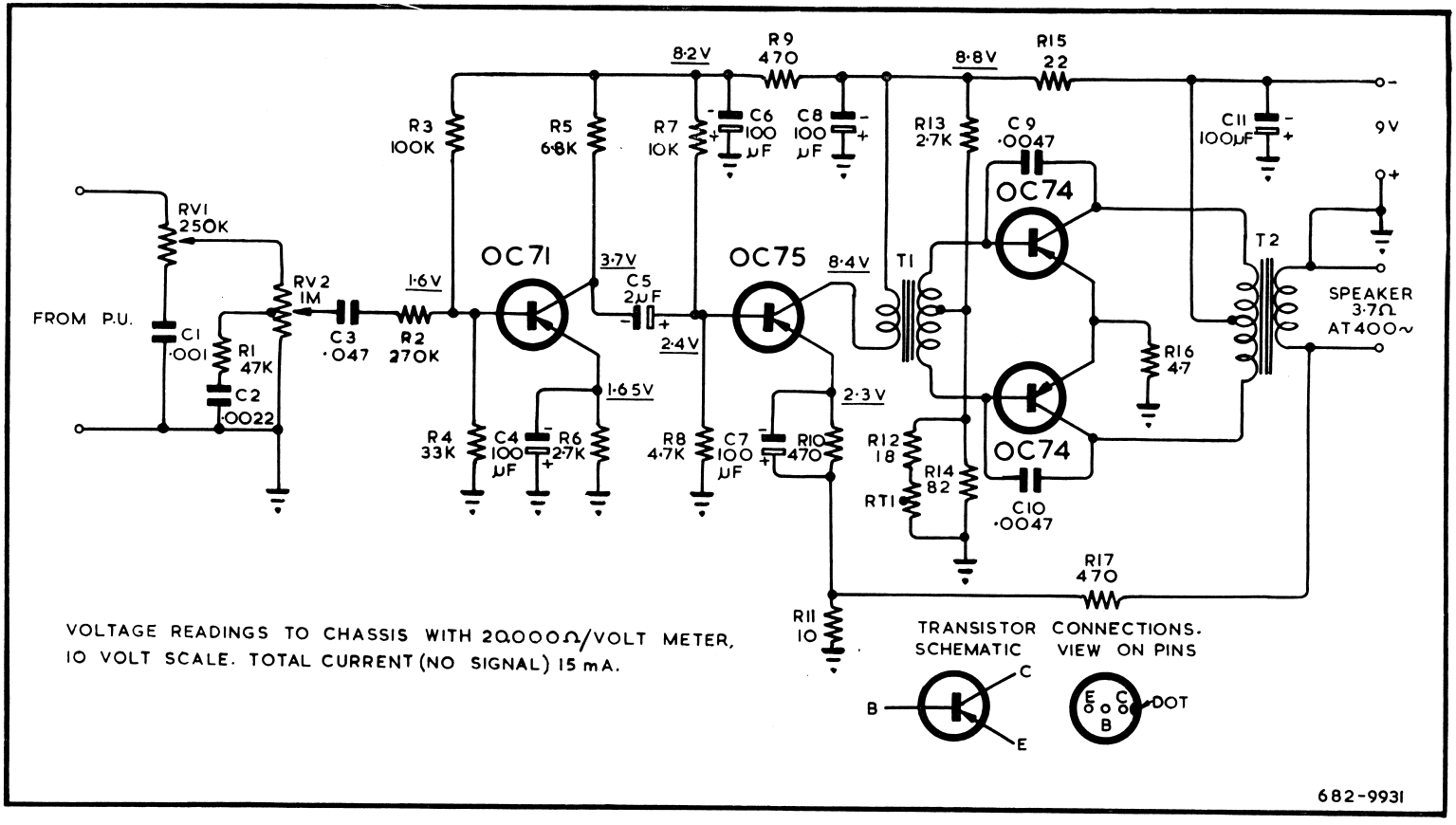
FROM P.U.
RV1 250K
C1 ·001
R1 47K
C2 ·0022
RV2 1M
C3 ·047
1·6V
R2 270K
R3 100K
R4 33K
OC71
R5 6·8K
C4 100 µF
R6 2·7K
1·65V
3·7V
C5 2µF
2·4V
R7 10K
8·2V
C6 100 µF
R8 4·7K
C7 100 µF
OC75
8·4V
R9 470
C8 100 µF
R10 470
2·3V
R11 10
T1
R13 2·7K
R12 18
RT1
R14 82
8·8V
C9 ·0047
OC74
OC74
C10 ·0047
R15 22
R16 4·7
R17 470
C11 100µF
9V
T2
SPEAKER 3·7Ω AT 400~
VOLTAGE READINGS TO CHASSIS WITH 20,000Ω/VOLT METER, 10 VOLT SCALE. TOTAL CURRENT (NO SIGNAL) 15 mA.
TRANSISTOR CONNECTIONS.
SCHEMATIC
VIEW ON PINS
B
C
E
DOT
682-9931