H.M.V. TYPE H2

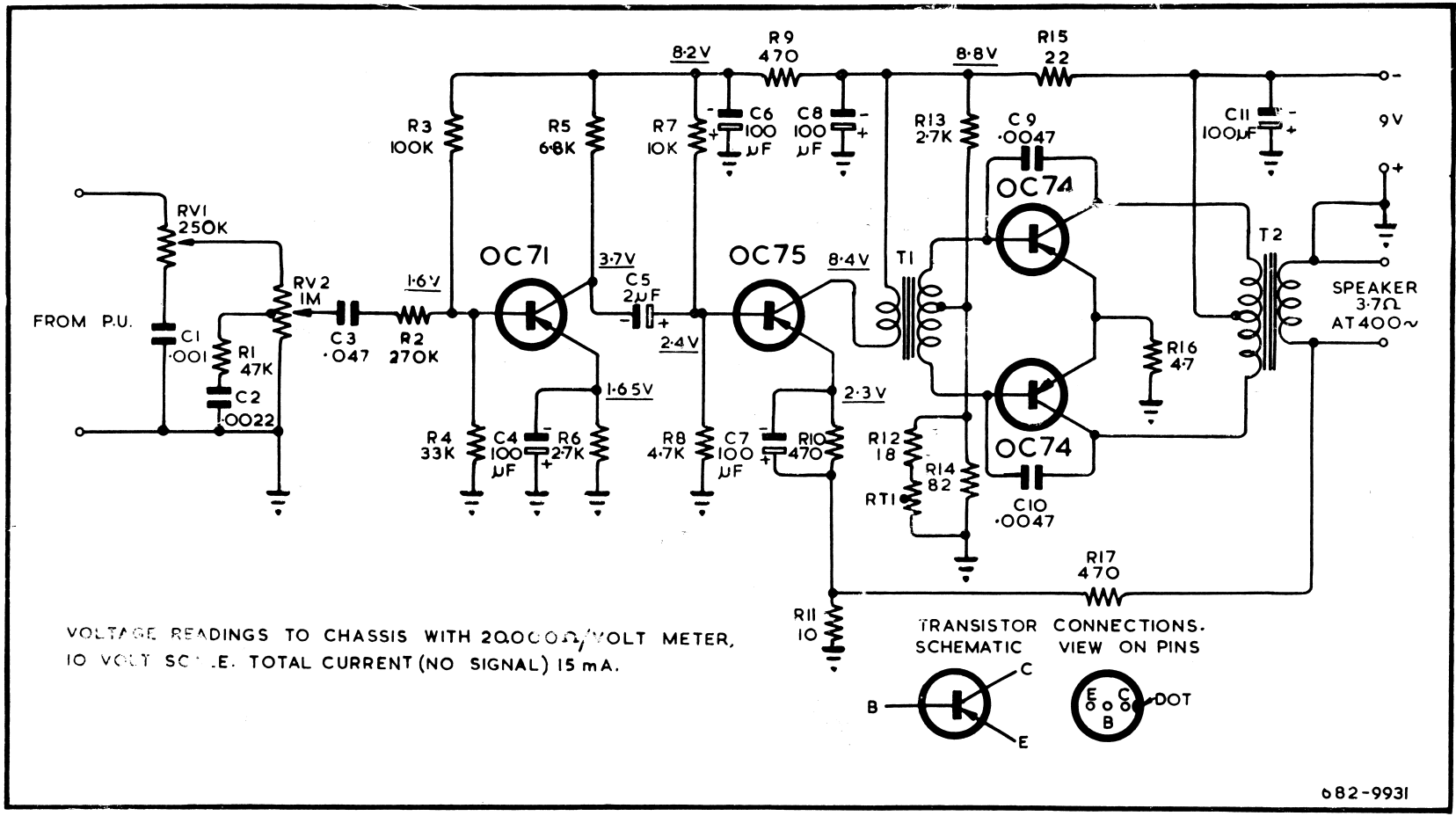
8·2V
R9
470
8·8V
R15
22
R3
100K
R5
6·8K
R7
10K
C6
100
µF
C8
100
µF
R13
2·7K
C9
·0047
C11
100µF
9V
OC74
RV1
250K
OC71
3·7V
C5
2µF
OC75
8·4V
T1
T2
RV2
1M
1·6V
FROM P.U.
C1
·001
R1
47K
C3
·047
R2
270K
2·4V
SPEAKER
3·7Ω
AT 400~
R16
4·7
C2
·0022
1·65V
2·3V
R4
33K
C4
100
µF
R6
2·7K
R8
4·7K
C7
100
µF
R10
470
R12
18
R14
82
RT1
OC74
C10
·0047
R17
470
R11
10
VOLTAGE READINGS TO CHASSIS WITH 20,000Ω/VOLT METER,
10 VOLT SCALE. TOTAL CURRENT (NO SIGNAL) 15 mA.
TRANSISTOR CONNECTIONS.
SCHEMATIC
VIEW ON PINS
B
C
E
E
C
B
DOT
682-9931

H2

TECHNICAL SPECIFICATIONS

POWER SUPPLY:

One 9-Volt Battery
Eveready Type 739.

CONSUMPTION:

15 mA (no signal).

TRANSISTOR COMPLEMENT:

OC71 — 1st A.F. Amplifier
OC75 — 2nd A.F. Amplifier
2 OC74 — Push-Pull Power Amplifiers

OUTPUT IMPEDANCE:

3.7 ohms at 400 c.p.s.

REF.	PART No.	DESCRIPTION	REF.	PART No.	DESCRIPTION
C1	279-4501	0.001 mfd ± 10% 400V. W.	C7	269-0541	100 mfd 3V. W.

TRANSISTOR VOLTAGES AND CURRENTS

Transistor	*Emitter*	*Base*	*Collector*	*Collector Current*
OC71 — 1st A.F.	1.65 V	1.6 V	3.7 V	0.64 mA
OC75 — 2nd A.F.	2.30 V	2.4 V	8.4 V	5.1 mA
OC74 — Output		0.16 V	9.0 V	3.8 mA Total
OC74 — Output		0.16 V	9.0 V	
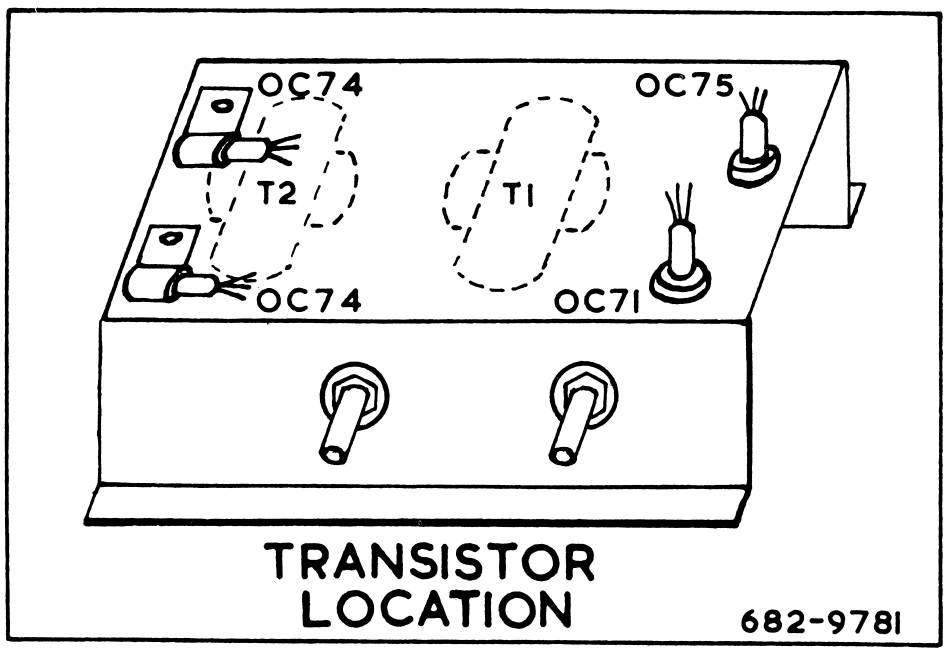
All readings are negative with respect to chassis.
Voltage readings taken with 20,000 ohm per volt meter.
Do not use voltmeters having an impedance of less than 10,000 ohms per volt.
Total current drain with no audio output — 15 mA.