MITSUBISHI

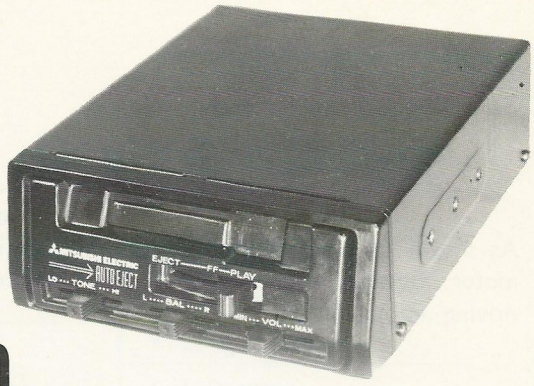

CASSETTE CAR STEREO

SERVICE MANUAL

MODEL : GX-30E

(IN-DASH/UNDER-DASH TYPE)

MITSUBISHI ELECTRIC CORPORATION

1. FEATURES

- The cassette is ejected and power disconnected automatically at the tape end, even when locked into the fast-forward (FF) mode.
- With the automatic loading system, you just slide the cassette into the port and it's loaded automatically for play.
- FF lever locks on, so there is no need to take your hand from the wheel for more than an instant.
- It's easy to set tone, balance, and volume with slider controls.
- Attractive compact design makes possible to mount under-dash or in-console.
- Both the main amplifier and the preamplifier incorporate high-performance, high-quality ICs.
- Also plays monaural tape, or tapes you record yourself.

2. SPECIFICATIONS

No. of tracks:	4-track, 2-channel, 2-program stereo playback
Tape Speed:	4.75 cm/sec ($1\frac{7}{8}''$)
Output:	4.0W RMS per channel (max.)
Impedance:	4~8 Ω
Power supply:	11~16V DC (negative ground)
Battery drain (avg.):	0.7A
Dimensions (WxHxD):	140x56x153mm ($5\frac{1}{2}$x$2\frac{3}{8}$x 6'')
Weight:	1.2kg (2 lbs.)

3. Mechanism Theory

1) Tape driving system

(Refer to Fig. 1)

As shown in Fig 1, two belts transmit rotation of motor, flywheel, reel rest, and crank pinion for driving automatic eject in sequence.

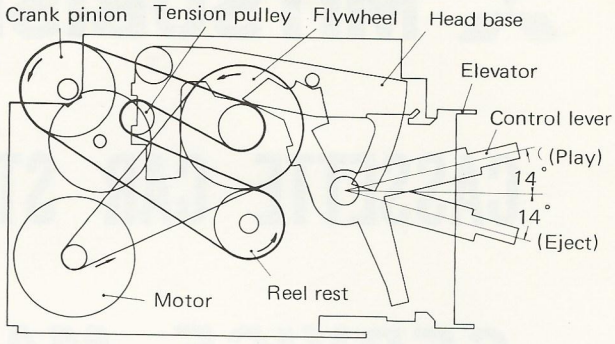

Fig. 1

2) FF mechanism

(Refer to Fig. 2)

When control lever is slided to FF position ;

1) Head base recedes to allow head to leave from tape.
2) At this time, FF idler presses reel rest and is set to FAST FORWARD.

3) Tape eject mechanism

- **Manual eject**

(Refer to Fig. 2)

When control lever is slided to EJECT position, its head acts on elevator link to eject elevator. At this time, its other end acts on head base to allow head and pinch roller to thoroughly leave from cassette.

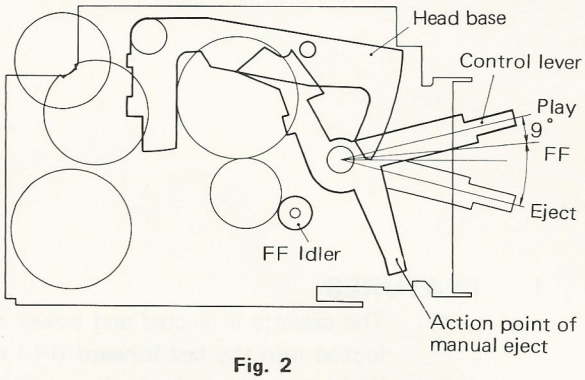

Fig. 2

- **Automatic eject**

(Refer to Fig. 3)

1) On either PLAY or FF, tape tension increased when it is rolled up to the end is transmitted to tape lever.
2) The motion of tape lever allows pinion gear on its other end to be engaged with crank pinion.
3) Crank pinion rotates at all times on PLAY or FF, thereby moving the cum gear cut to drive cum gear.
4) Cum gear with two cum elements allows head base to leave from cassette and then effects raise of elevator through upboss.
(Cum gear, when rotated one turn, is again disengaged from the gear cut.)

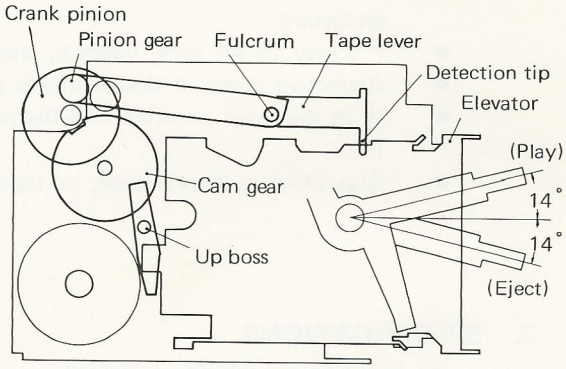

Fig. 3

4. Guide to Trouble Repair

Phenomena	Procedures	Check	Judgement	Troubles Cause
No Sound	1	IC302 Voltage Pin 10 13.2V	Drop	• IC302, 402 short
				• C317, CP302 short
			OV	• L1 open
				• S1 damaged
			Proper	• Check for procedure 2
	2	IC301 Voltage Pin 4 7.5V	Drop or Up	• Pin 5 pattern open
			OV	• R309 open
				• C319 short
				• IC301 damaged
One Side No Sound (L Channel)	3	Pick the IC302 Pin4	No sound	• Check for procedure 4
			Sound	• Check for procedure 5
	4	IC302 Voltage Pin 4 3.7V	OV	• IC302 damaged
				• C313, 316 short
			Up	• IC302 damaged
				• Pin 8 pattern open
			Drop	• Speaker short
				• CP301 short
				• C307, 314 open
				• R306 open
	5	Pick the C302–terminal	Sound	• TL damaged
			No sound	• Check for procedure 6
	6	IC301 Voltage Pin 1 0.75V Pin 2 0.72V Pin 3 3.3V	Abnormality	• IC 301 damaged
				• C303 short
			Normality	• C305, 308 open
				• R302, 305 open
				• VR301 damaged
Oscillation				• C302, 309, 315, 317 open
				• Head lead open
Distorted Sound				• IC301, 302 damaged
				• Head dirt
Small Sound				• IC301 damaged
				• C303 open
				• R301, 303 open

5. Disintegration

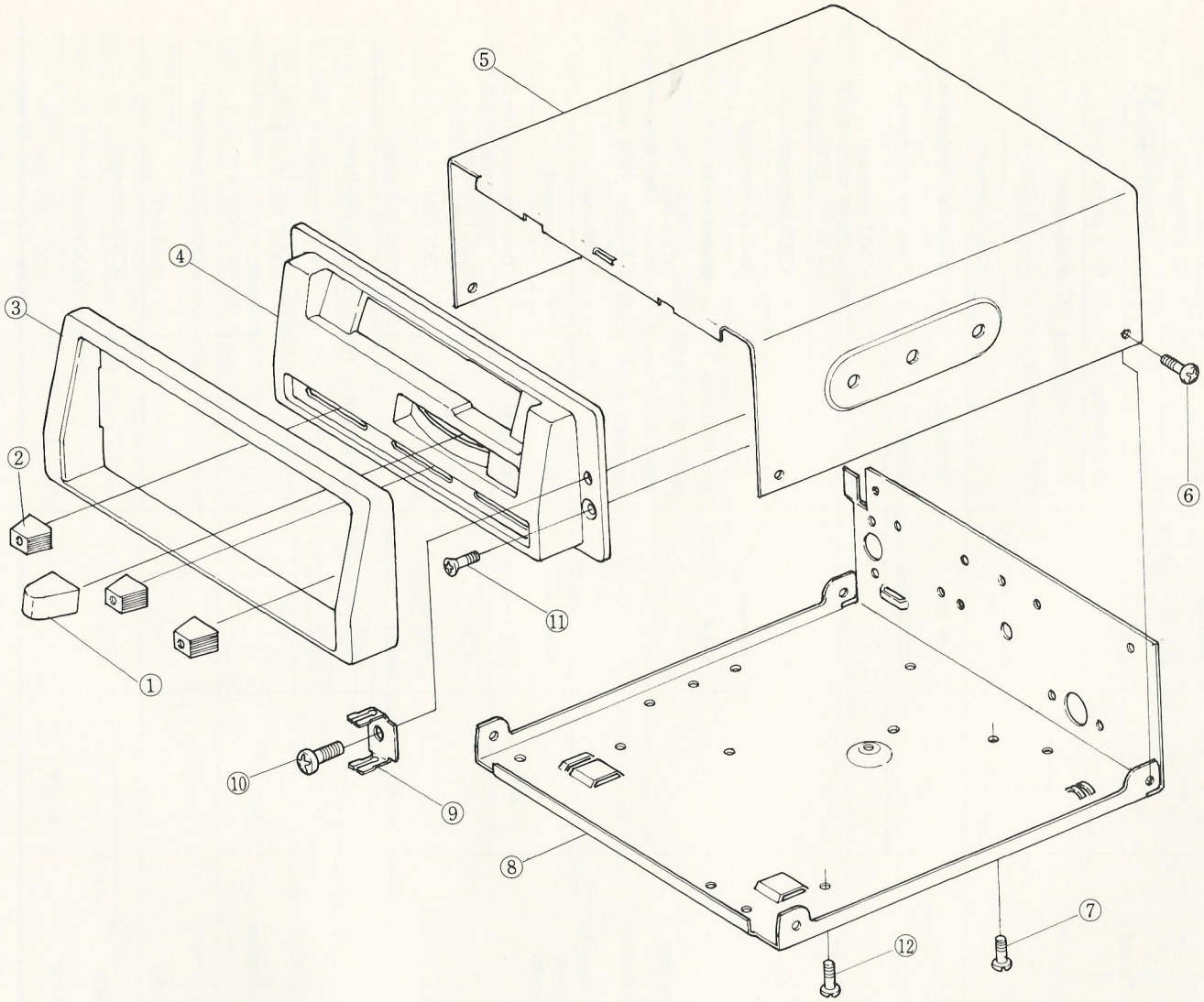

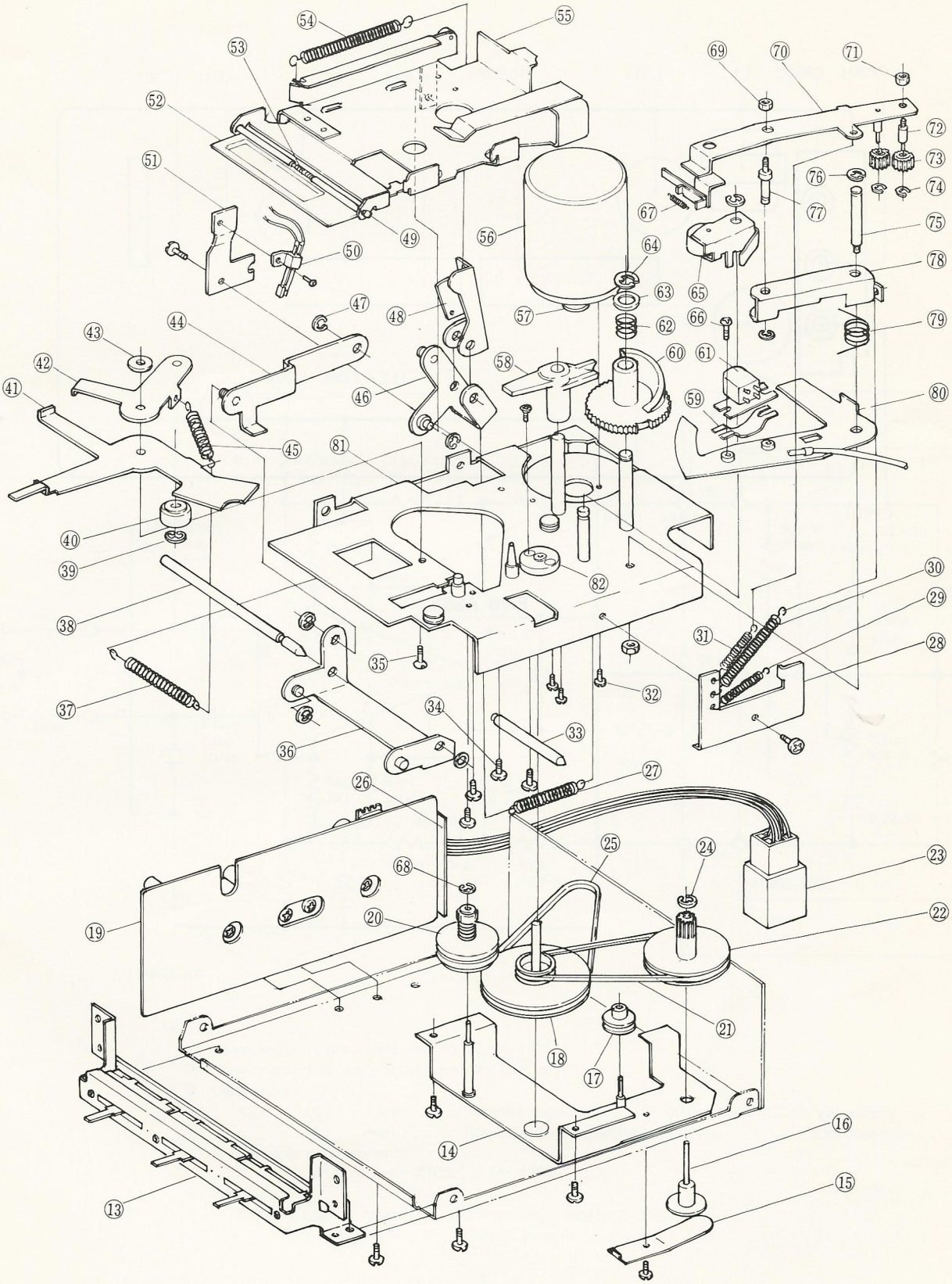
54
55
53
52
51
69
70
71
72
73
76
74
77
75
67
49
56
50
64
78
63
65
66
57
62
79
47
48
43
44
60
61
42
58
41
46
59
80
45
81
40
39
82
30
29
38
31
28
35
32
37
34
33
36
27
26
25
24
23
68
22
19
20
21
18
17
16
14
15
13

6. Parts Disposition

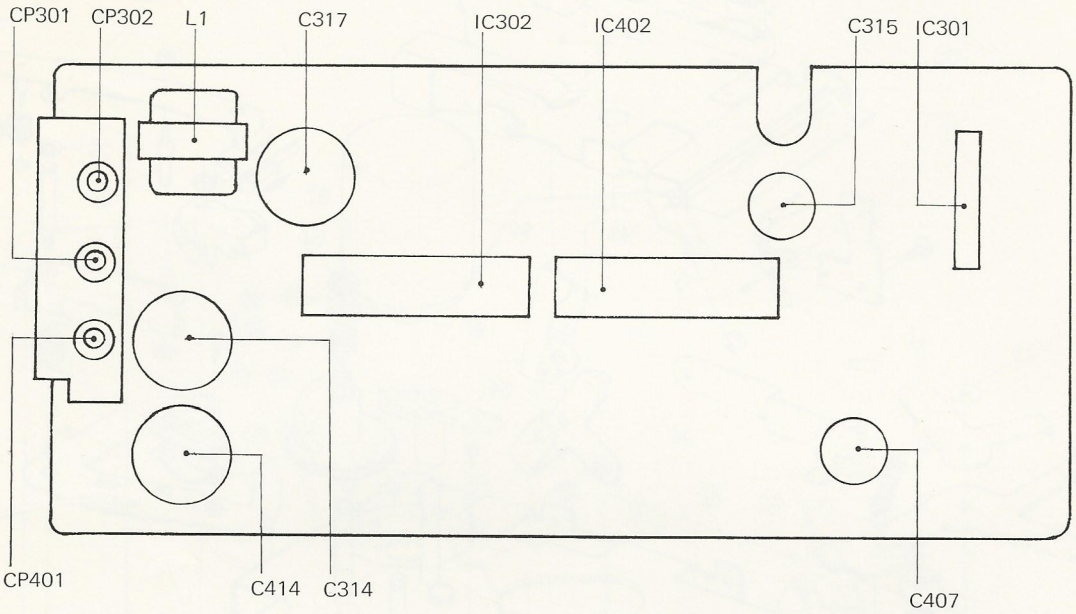

PWB ASSY

PRINTED CIRCUIT BOARD AND WIRING DIAGRAM (Printed Side)

Model GX–30E

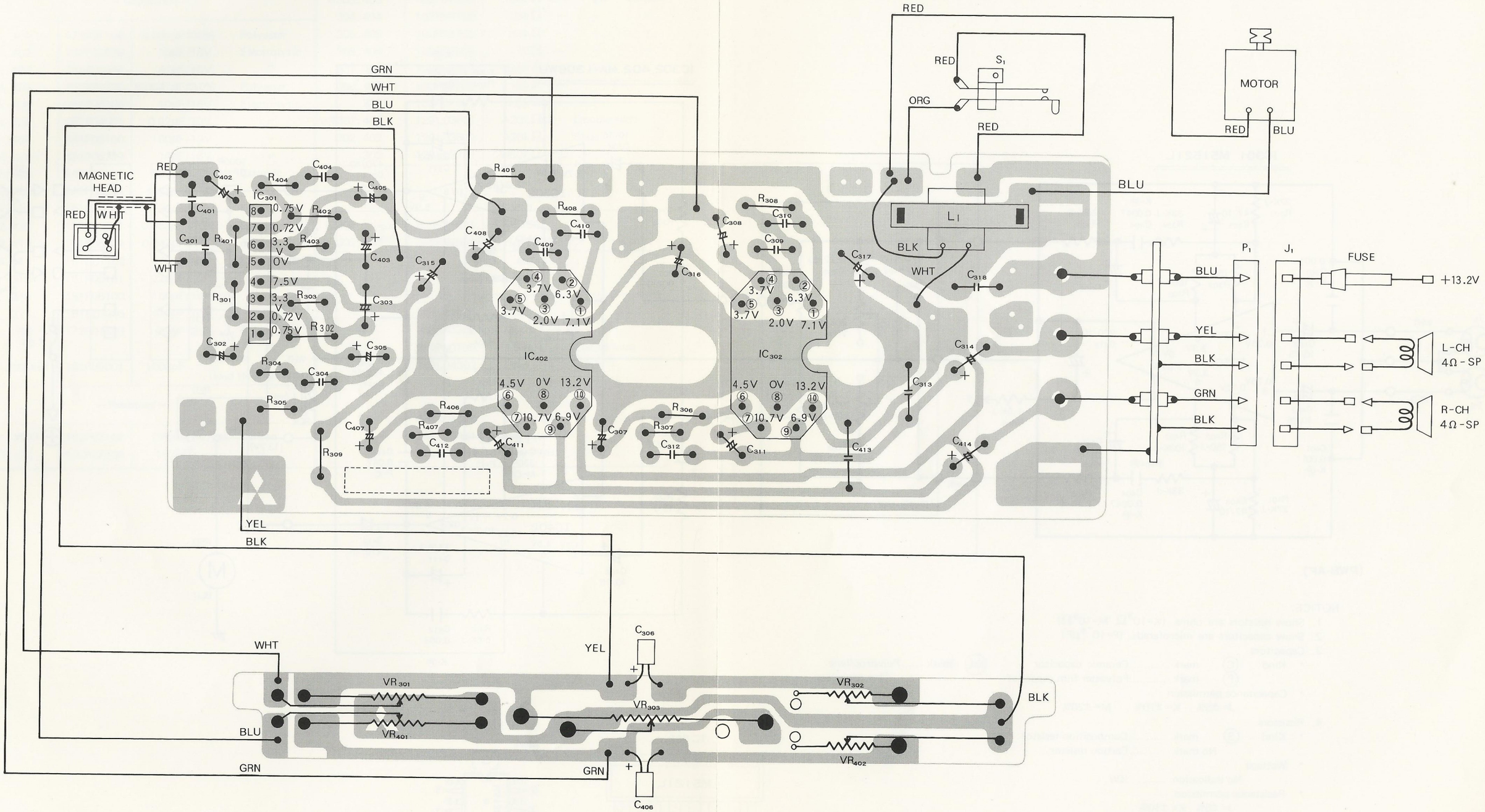

SCHEMATIC DIAGRAM

Model GX–30E

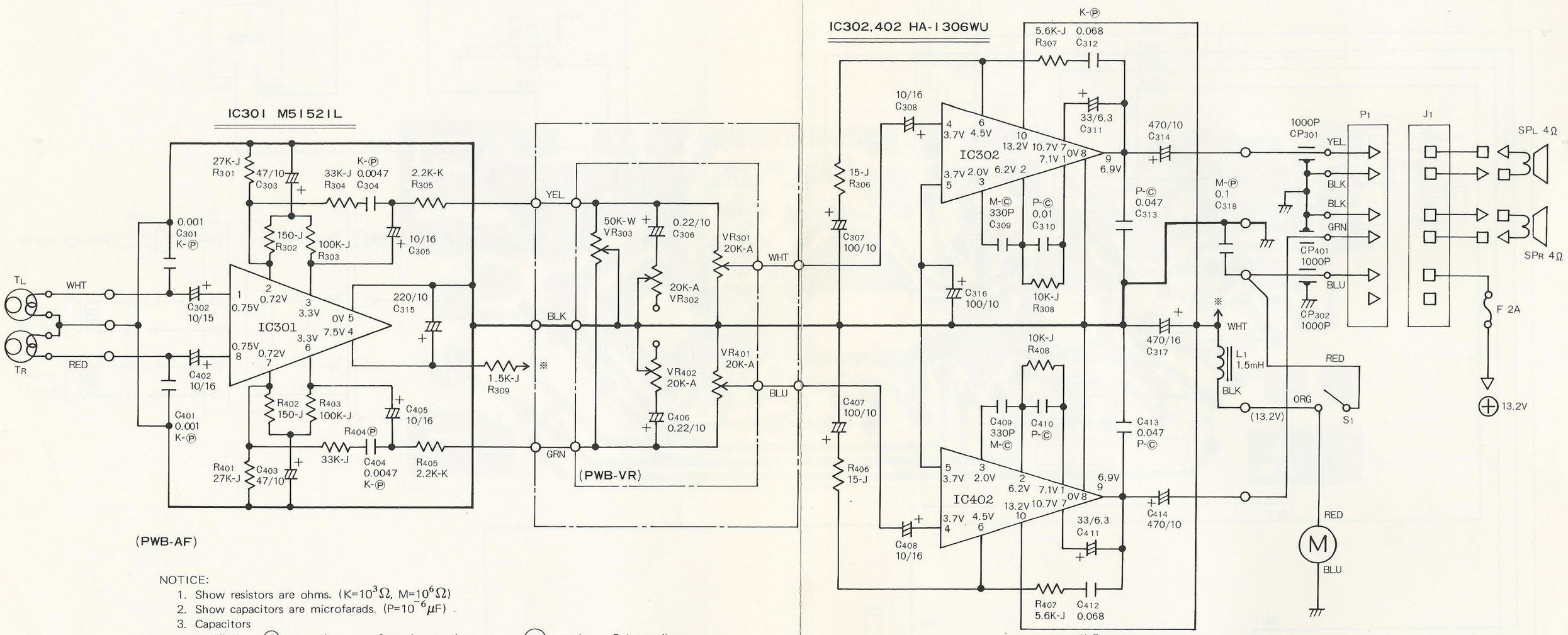

NOTICE:

1. Show resistors are ohms. ($K=10^3\Omega$, $M=10^6\Omega$)
2. Show capacitors are microfarads. ($P=10^{-6}\mu F$)
3. Capacitors
   - Kind Ⓒ mark .....Ceramic capacitor
     Ⓟ mark .....Polyester film capacitor
     ⓂⓁ mark .....Polypropilene film capacitor
   - Capacitance permission
     J= ±5% , K= ±10% , M= ±20%
4. Resistors
   - Kind Ⓢ mark .....Composition resistor
     No mark .....Carbon resistor
   - Wattage
     No indication ..... ¼W
   - Resistance permission
     J= ±5% , K= ±10%
5. Each terminal voltage taken with circuit tester at the minimum position of volume control when no signal is given.
6. The standard point to measure voltage is on chassis.
7. S1 — a power switch.
8. R305, R405 is L-R channel gain adjustment resistor.

IC 301

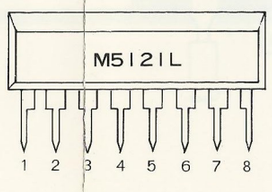

IC302, 402

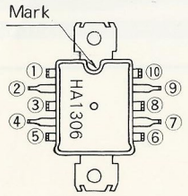

9. Parts List

1) Electrical Parts

Symbol No.	Parts No.	Description	
		— Capacitors —	
C301, 401	172P01106	0.001μF±10%	Polyester
302, 402	181P06709	10μF/16V	Electrolytic
303, 403	181P06009	47μF/10V	"
304, 404	172P01200	0.0047μF±10%	Polyester
305, 405	181P06709	10μF/16V	Electrolytic
306, 406	181P04001	0.22μF/10V	"
307, 407	181P06100	100μF/10V	"
308, 408	181P06709	10μF/16V	"
309, 409	141P06101	330pF±20%	Ceramic
310, 410	141P06204	0.01μF$\pm^{100}_{0}$%	"
311, 411	181P06002	33μF/6.3V	Electrolytic
312, 412	172P01207	0.068μF±10%	Polyester
313, 413	141P06207	0.047μF$\pm^{100}_{0}$%	Ceramic
314, 414	181L01102	470μF/10V	Electrolytic
315	181P06101	220μF/10V	"
316	181P06100	100μF/10V	"
317	181L01205	470μF/16V	"
318	172P01403	0.1μF±20%	Polyester
CP301,302,401	141P05001	1000pF	Ceramic (lead through type)
		— Resistors —	
R301, 401	103P07102	27kΩ±5% ¼W	Carbon
302, 402	103P07605	150Ω "	"
R303, 403	103P07802	100kΩ ±5% ¼W	Carbon
304, 404	103P07709	33kΩ " "	"
305, 405	103P07702	2.2kΩ " "	"
306, 406	103P07509	15Ω " "	"
307, 407	103P07008	5.6kΩ " "	"
308, 408	103P07706	10kΩ " "	"
309	103P07701	1.5kΩ " "	"
VR301, 401	129L03801	A20kΩx2	Double slide
302, 402	129L03601	A20kΩ	Slide
303	129L03701	W50kΩ	"
		IC	
IC301	266P31601	M5152L	
302, 402	266P30601	HA-1306WU	
		— Others —	
TL, R	460L01201	Head	
M	288P00302	Motor	
L1	351P00105	1.5 mH	Choke trans
P1	242L04302	Lead	6CM
S1	435L01001	Spring SW	
	241L26401	PWB VR	
	923K14101	Assy PWB	

2) Mechanical Parts

Symbol No.	Parts No.	Description	Symbol No.	Parts No.	Description
1	704M11801	Lever knob	42	891M03801	Unit lever-RF
2	704M10801	Slide knob	43	630M29001	Boss lever
3	702L02901	Escutcheon	44	891M04301	Link
4	702K04601	Panel	45	570M19401	Spring-FF
5	590K07602	Upper cover	46	891M04201	Lever-EV-B
6	669L02004	Screw	47	685C00206	Retaining ring
7	650P300Q6	Screw	48	590M96501	Ejector
8	943M06608	Assy' base chassis	49	531M06002	Shutter shaft
9	590M80501	Holder-E	50	435L01001	Spring-SW
10	650P401Q2	Screw	51	590M96601	Holder-SW
11	651P300Q6	Screw	52	768M04501	Shutter
12	669L02001	Screw	53	570M17301	Shutter spring
13	943L29601	Assy VR holder	54	570M19601	Spring-EJ
14	891M04401	Bottom plate	55	891L01001	Elevator
15	590M96701	Spring plate	56	288P00302	Motor
16	891M04501	Pulley post	57	522M03301	Motor pulley
17	641M08901	Tension pulley	58	641M08701	Boss-up
18	524M00501	Flywheel	59	570M19002	Head spring
19	923K14101	Assy PWB	60	641M08601	Cam gear
20	891L00901	Unit reel rest	61	460L01201	Head
21	521M01601	Belt FP	62	570M18901	Spring-CG
22	641D90501	Crank pinion	63	680P150W1	Washer
23	242L04302	Lead 6CM	64	685C00207	Retaining ring
24	685C00204	Retaing ring	65	891M03701	Unit pinch roller
25	521M01501	Belt MF	66	650P200Q4	M2x4 Screw
26	923L22901	Assy holder CP	67	570M19501	Spring-TIP
27	570M18501	Spring-EV	68	685C00203	Retaining ring
28	590M96901	Spring holder	69	670P130Q1	M3 Nut
29	570M18501	Spring-EV	70	891M03901	Tape lever-A
30	570M18401	Spring-PR	71		Assembled (70)
31	570M18501	Spring-EV	72		
32	650P260Q3	M2.6x3 Screw	73	641M08801	Pinion
33	630M28902	Shaft-EV	74	685C00204	Retaining ring
34	652P300Q4	M3x4 Screw	75	630M28701	Base head post
35	651P300Q6	M3x6 Screw	76	685C00206	Retaining ring
36	891M04101	Lever-EV-A	77	630M28801	Tape lever pin
37	570M19102	Spring-CL	78	590M96401	Tape lever-B
38	630M28901	Shaft-EV	79	570M18801	Spring-HB
39		Assembled (42)	80	943M06609	Assy base head
40			81	891L01101	Unit main base
41	590M96201	Control lever	82	530M01201	Capstan metal