NATIONAL MODEL GT-692

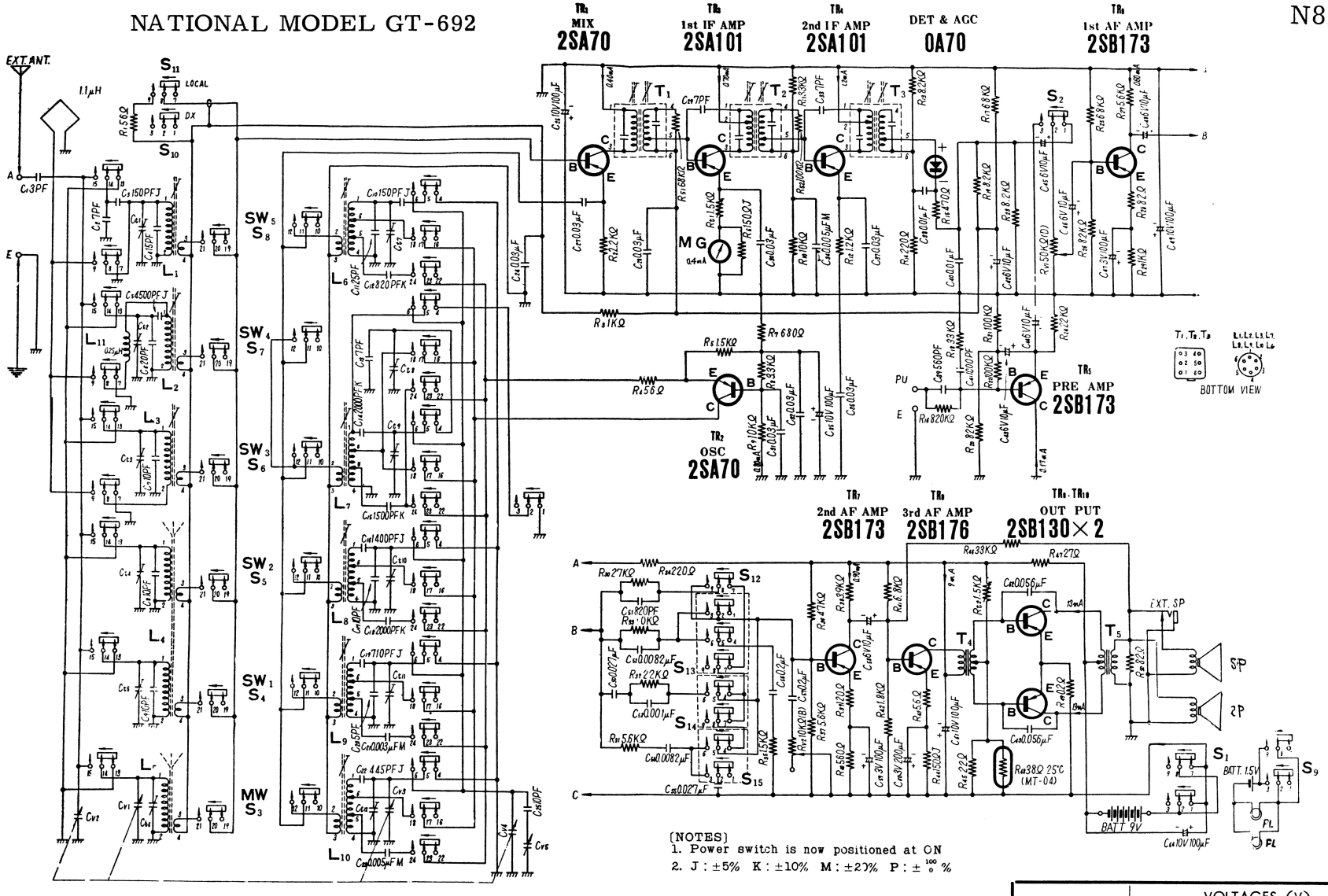

[NOTES]
1. Power switch is now positioned at ON
2. J : ±5% K : ±10% M : ±20% P : $^{+100}_{0}$ %

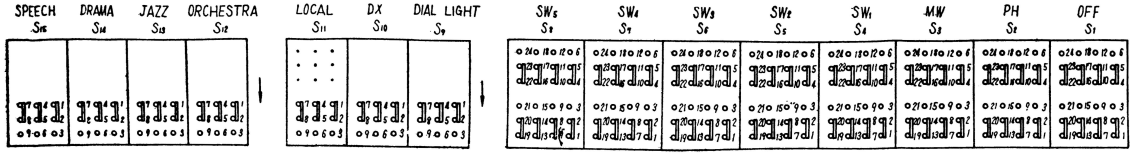

TRANSISTORS		VOLTAGES (V)		
		COLLECTOR	BASE	EMITTER
TR_1	2SA70	−7V	−0.8V	−2.5V
TR_2	2SA70	−7V	−2.45V	−0.87V
TR_3	2SA101	−7V	−0.8V	−0.79V
TR_4	2SA101	−7V	−1.38V	−1.27V
TR_5	2SB173	−7V	−1.5V	−3.25V
TR_6	2SB173	−4.23V	−0.7V	−0.53V
TR_7	2SB173	−4.43V	−0.67V	−0.66V
TR_8	2SB176	−7.9V	−0.64V	−3.6V
TR_9	2SB130	−9V	−0.18V	0V
TR_{10}	2SB130	−9V	−0.18V	0V

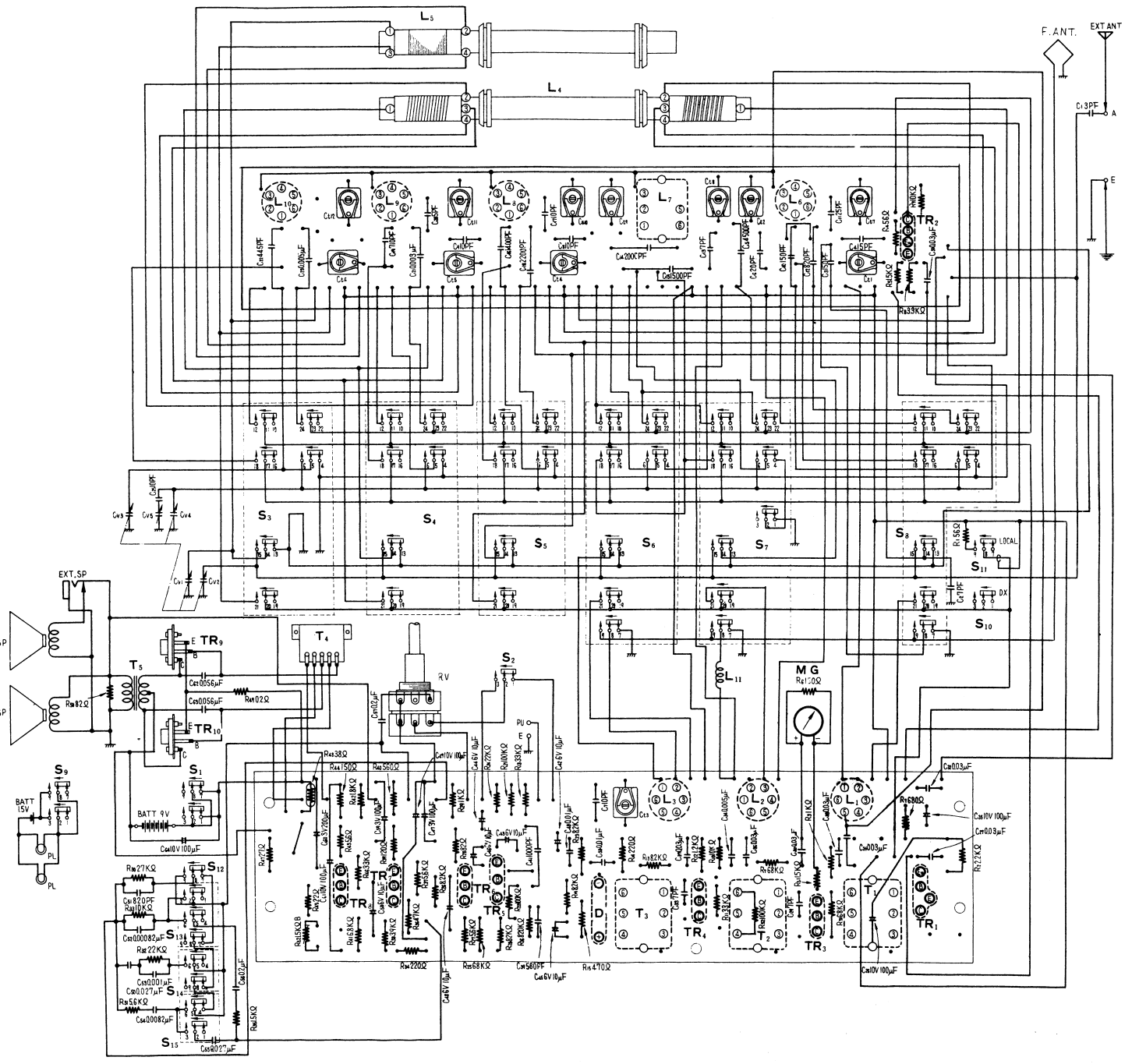

NATIONAL MODEL GT-692