PHILIPS Service notes

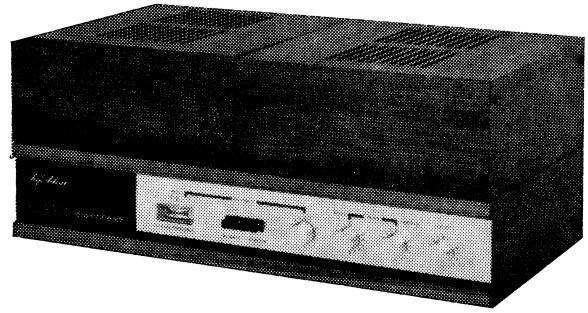

MODEL GF580

SPECIFICATIONS

Power supply	220-250V. 50 Hz
Record player	GC032
Pick-up head	GP228
Modules	UA505 x 2
Stereo balance meter	CZ.291.102
Lamp	8073D (6.3V 0.1A tub. screw)

ACCESS FOR SERVICE

Place lids on and turn unit upside down on protective cloth. Remove case bottom panel. Remove the control knobs by loosening grub screws. Remove the four chassis mounting screws. Lead length is sufficient to allow the chassis to be turned over for full accessibility. There should not be need to remove modules for an operational check.

If a module is to be operated away from the chassis, ensure that the transistors are fitted with flag type heat sinks and that these in turn are attached to suitable metal strip for adequate heat dissipation.

Reinstallation is a reversal of the above procedure.

OUTPUT TRANSISTOR ADJUSTMENT

Provision is made by means of metering points in each module for insertion of a meter for adjustment of output transistor current by means of R108. Current should be adjusted, at no signal, in accordance with the following table.

Temperature °F	40-85	90	95	100	105	110	115	Q.C.
Collector current mA	7.5	7.5	7.7	8.0	8.5	9.0	10.5	±10%
Total current mA	25	25.5	26	26.5	28	29	30	±20%

MECHANICAL PARTS LIST

Filter switch (push button)	CZ.221.067
Knob—Controls 4x	CS.610.041
Lampholder	4822.255.10007
Plug—Speaker, 2x	4822.264.30041
Socket—Speaker, 2x	4822.267.40073
Socket—Tape	4822.267.40039

Cabinet hardware—

Carrying handle	CR.523.236
Spring return (for carrying handle), 2x	4822.492.50276
Clip-retaining (for handle spring), 2x	3104.101.21021
Hinge portion (on speaker box), 4x	CS.220.201
Hinge portion (on cabinet) 4x	CS.220.200
Latch (on speaker box) 2x	CS.281.008
Catch (on cabinet) 2x	CS.281.007
Foot, 4x	CS.240.045
Function strip	CS.430.698
Bezel	CS.430.193

July, 1968

Published by PHILIPS ELECTRICAL PTY. LTD., Australia

Branches in all States

GF580

ELECTRICAL PARTS LIST

CAPACITORS

C. No.	DESCRIPTION	V.W.	TOL.±%	REPLACEMENT TYPE or CODE No.
101	2M5 Electrolytic	64		C.426.AR/H2.5
102	125M Electrolytic	10		C.426.AR/D125
103	40M Electrolytic	16		C.426.AR/E40
104	1G Electrolytic	16		C.437.CB/E1000
105	2K7 Polyester	400	10	C.296.AC/A2K7
201	10K Polyester	160	10	C.296.AA/A10K
202	M64 Electrolytic	64		C.426.AS/H0.64
204	2M5 Electrolytic	64		C.426.AR/H2.5
301	2K2 Polyester	400	10	C.296.AC/A2K2
302	2K2 Polyester	400	10	C.296.AC/A2K2
303	22K Polyester } Filter	160	10	C.296.AA/A22K
304	22K Polyester }	160	10	C.296.AA/A22K
305	6K8 Polyester	400	10	C.296.AC/A6K8
306	6K8 Polyester	400	10	C.296.AC/A6K8
307	18K Polyester	160	10	C.296.AA/A18K
308	18K Polyester	160	10	C.296.AA/A18K
309	4K7 Polyester	400	10	C.296.AC/A4K7
310	4K7 Polyester	400	10	C.296.AC/44K7
311	82K Polyester	160	10	C.296.AA/A82K
312	82K Polyester	160	10	C.296.AA/A82K
313	270K Polyester	160	10	C.296.AA/A270K
314	270K Polyester	160	10	C.296.AA/A270K
315	150K Polyester	160	10	C.296.AA/A150K
316	150K Polyester	160	10	C.296.AA/A150K
317	470E Ceramic } Tape		20	C.322.BC/P470E
318	470E Ceramic } Socket		20	C.322.BC/P470E
319	640M Electrolytic	6.4		C.437.CB/C640
320	80M Electrolytic	25		C.426.AR/F80
321	2G Electrolytic	25		CZ.100.152
322	80M Electrolytic	25		C.426.AR/F80

RESISTORS

R. No.	DESCRIPTION	W.	TOL.±%	REPLACEMENT TYPE or CODE No.
101	56K Carbon	½	10	B8.305.05A/56K
102	68K Carbon	½	10	B8.305.05A/68K
103	22E Carbon	½	10	B8.305.05A/22E
104	4K7 Carbon	½	10	B8.305.05A/4K7
105	4K7 Carbon	½	10	B8.305.05A/4K7
106	33E Carbon	½	10	B8.305.05A/33E
107	33E NTC Disc	1	20	B8.320.01P/33E
108	100E Carbon preset Bias adj.			E.086.AC/100E
109	220E Carbon	½	10	B8.305.05A/220E
110	E68 Wire Wound	½	10	IRC BW½
111	E68 Wire Wound	½	10	IRC BW½
112	220E Carbon	½	10	B8.305.05A/220E
113	15K Carbon	½	10	B8.305.05A/15K
201	100K Carbon	½	10	B8.305.05A/100K
202	470K Carbon	½	10	B8.305.05A/470K
203	100K Carbon	½	10	B8.305.05A/100K
204	6K8 Carbon	½	10	B8.305.05A/6K8
205	33K Carbon	½	10	B8.305.05A/33K
301	470K Carbon } Filter	½	10	B8.305.05A/470K
302	470K Carbon }	½	10	B8.305.05A/470K
303	4K7 Carbon	½	10	B8.305.05A/4K7
304	4K7 Carbon	½	10	B8.305.05A/4K7
305	100K Carbon pot. 'Z6' taper, (balance)			CZ.034.169.1
306	6K8 Carbon	½	10	B8.305.05A/6K8
307	6K8 Carbon	½	10	B8.305.05A/6K8
308-9	50K Carbon pot. ganged, 'A' taper, (treble)			CZ.034.174
310	5K6 Carbon	½	10	B8.305.05A/5K6
311	5K6 Carbon	½	10	B8.305.05A/5K6
312-3	50K Carbon pot. ganged, 'A' taper, (bass)			CZ.034.174
314	3K9 Carbon	½	10	B8.305.05A/3K9
315	3K9 Carbon	½	10	B8.305.05A/3K9
316	820E Carbon	½	10	B8.305.05A/820E
317	820E Carbon	½	10	B8.305.05A/820E
318-9	50K Carbon pot. ganged, tap 5K, 'C' taper with SPST switch (volume)			CZ.032.061.E
320	1K2 Carbon	½	10	B8.305.05A/1K2
321	1K2 Carbon	½	10	B8.305.05A/1K2
322	820E Carbon	½	10	B8.305.05A/820E
323	820E Carbon	½	10	B8.305.05A/820E
324	470K Carbon } Tape	½	10	B8.305.05A/470K
325	470K Carbon } Socket	½	10	B8.305.05A/470K
326	120E Carbon	½	10	B8.305.05A/120E

INDUCTORS

L. No.	DESCRIPTION	CODE No.
301	Speaker 6" (Rola C6L/8)	CZ.161.032
302	Speaker 6" (Rola C6L/8)	CZ.161.032
303-304 } 305-306 }	Power Transformer	CZ.344.155

FUSE

Fsl	750 mA	Australux 3AG

GF580

PHILIPS ELECTRICAL PTY. LTD.

DIAGRAM CODE CS.438-679 | UNIT MODEL GF580 | CIRCUIT CODE 07/339

COMPONENT LOCATION

COMP.	ZONE	COMP.	ZONE	COMP.	ZONE	COMP.	ZONE
R101	14B	C101	14B	TR101	15C		
R102	14C	C102	15C	TR102	16C		
R103	15D	C103	17B	TR103	17B		
R104	16B	C104	18B	TR104	17C		
R105	15D	C105	16B				
R106	16D			TR201	6C		
R107	16C						
R108	16B	C201	5C				
R109	16A	C202	5B				
R110	17B						
R111	17C	C204	6C				
R112	18A						
R113	15A						
R201	5B						
R202	5C						
R203	5C						
R204	6B						
R205	6C						
R301	2H	C301	7A	TR301	2N	L301	20C
R302	2H	C302	7G			L302	20J
R303	7B	C303	9D			L303	5N
R304	7G	C304	9J			L304	5M
R305	9F	C305	10B	D301	4M	L305	5N
R306	10B	C306	10H	D302	4N	L306	5N
R307	10H	C307	10D	D303	2N		
R308	10C	C308	10J	D304	2O		
R309	10J	C309	11B	D305	6D		
R310	10C	C310	11H	D306	6K	La1	5N
R311	10J	C311	11C				
R312	11C	C312	11J				
R313	11H	C313	12C				
R314	11C	C314	12J	S1	7N	FS1	2M
R315	11J	C315	6E	S2	3H		
R316	11D	C316	6K	S3	3H		
R317	11J	C317	1H	S4	9C		
R318	13B	C318	2H	S5	9J	M1	6L
R319	13H	C319	5D				
R320	12C	C320	2O				
R321	12J	C321	3O				
R322	5E	C322	7B				
R323	5K						
R324	1H						
R325	2H						
R326	3N						

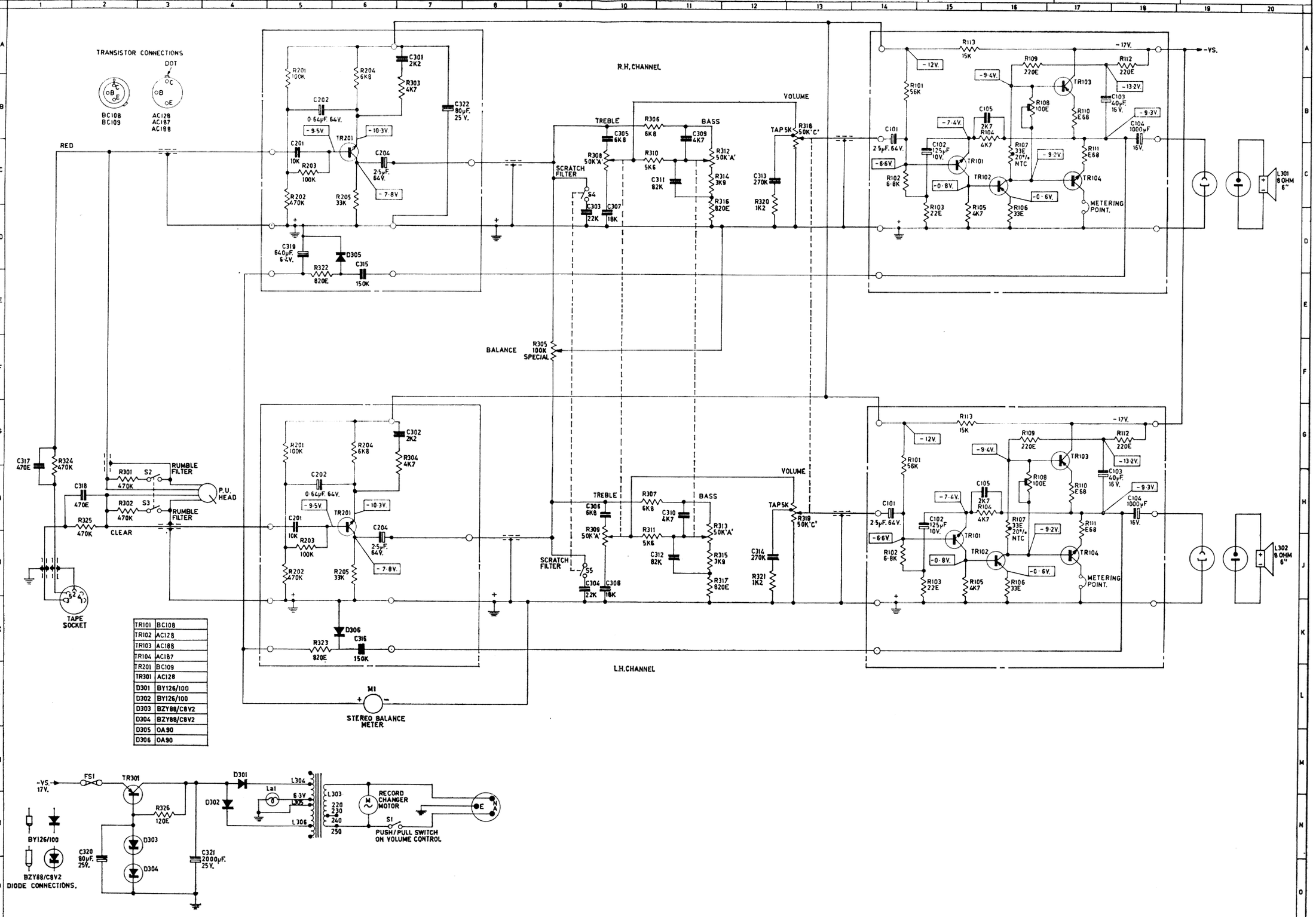

TR101	BC108
TR102	AC128
TR103	AC188
TR104	AC187
TR201	BC109
TR301	AC128
D301	BY126/100
D302	BY126/100
D303	BZY88/C8V2
D304	BZY88/C8V2
D305	OA90
D306	OA90

NOTES.

RESISTORS ARE 1/2W, CAPACITOR VALUES IN pF, UNLESS OTHERWISE STATED.
LAMP La1 6·3V, 0·1A, TYPE 8073D.
PLUGS SHOWN FROM PIN SIDE.
SOCKETS SHOWN FROM LUG SIDE.
SWITCHES SHOWN IN OFF POSITION.
VOLTAGES ARE MEASURED WITH VTVM RELATIVE TO POSITIVE UNDER 'NO SIGNAL' CONDITIONS.
QUIESCENT CURRENT TR103-TR104 SET BY MEANS OF R108 TO 7·5mA AT 17V & 75°F.

POINT	ZONE	UNIT	MODEL APPLICATION
			VOLTAGES
R	±10%.		
C	±10%, ELECTROLYTICS -10 +50%.		
			TOLERANCES

300 SERIES COMPONENTS APPEAR ON GF580, 100 & 200 ON UA505. SOME 300 SERIES COMPONENTS APPEAR ON P.W. BOARD. UA505 COMPONENTS PRINTED IN RED.

GF580

PHILIPS ELECTRICAL PTY. LTD.

DIAGRAM CODE CS.438·679 | UNIT MODEL GF580 | CIRCUIT CODE 07/339

COMPONENT LOCATION

COMP.	ZONE	COMP.	ZONE	COMP.	ZONE	COMP.	ZONE
R101	14B	C101	14B	TR101	15C		
R102	14C	C102	15C	TR102	16C		
R103	15D	C103	17B	TR103	17B		
R104	16B	C104	18B	TR104	17C		
R105	15D	C105	16B				
R106	16D			TR201	6C		
R107	16C						
R108	16B	C201	5C				
R109	16A	C202	5B				
R110	17B						
R111	17C	C204	6C				
R112	18A						
R113	15A						
R201	5B						
R202	5C						
R203	5C						
R204	6B						
R205	6C						
R301	2H	C301	7A	TR301	2N	L301	20C
R302	2H	C302	7G			L302	20J
R303	7B	C303	9D			L303	5N
R304	7G	C304	9J			L304	5M
R305	9F	C305	10B	D301	4M	L305	5N
R306	10B	C306	10H	D302	4N	L306	5N
R307	10H	C307	10D	D303	2N		
R308	10C	C308	10J	D304	2O		
R309	10J	C309	11B	D305	6D		
R310	10C	C310	11H	D306	6K	La1	5N
R311	10J	C311	11C				
R312	11C	C312	11J				
R313	11H	C313	12C				
R314	11C	C314	12J	S1	7N	FS1	2M
R315	11J	C315	6E	S2	3H		
R316	11D	C316	6K	S3	3H		
R317	11J	C317	1H	S4	9C		
R318	13B	C318	2H	S5	9J	M1	6L
R319	13H	C319	5D				
R320	12C	C320	2O				
R321	12J	C321	3O				
R322	5E	C322	7B				
R323	5K						
R324	1H						
R325	2H						
R326	3N						

NOTES.

RESISTORS ARE 1/2W, CAPACITOR VALUES IN pF, UNLESS OTHERWISE STATED.
LAMP La1 6·3V, 0·1A, TYPE 8073D.
PLUGS SHOWN FROM PIN SIDE.
SOCKETS SHOWN FROM LUG SIDE.
SWITCHES SHOWN IN OFF POSITION.
VOLTAGES ARE MEASURED WITH VTVM RELATIVE TO POSITIVE UNDER 'NO SIGNAL' CONDITIONS.
QUIESCENT CURRENT TR103-TR104 SET BY MEANS OF R108 TO 7·5mA AT 17V & 75°F.

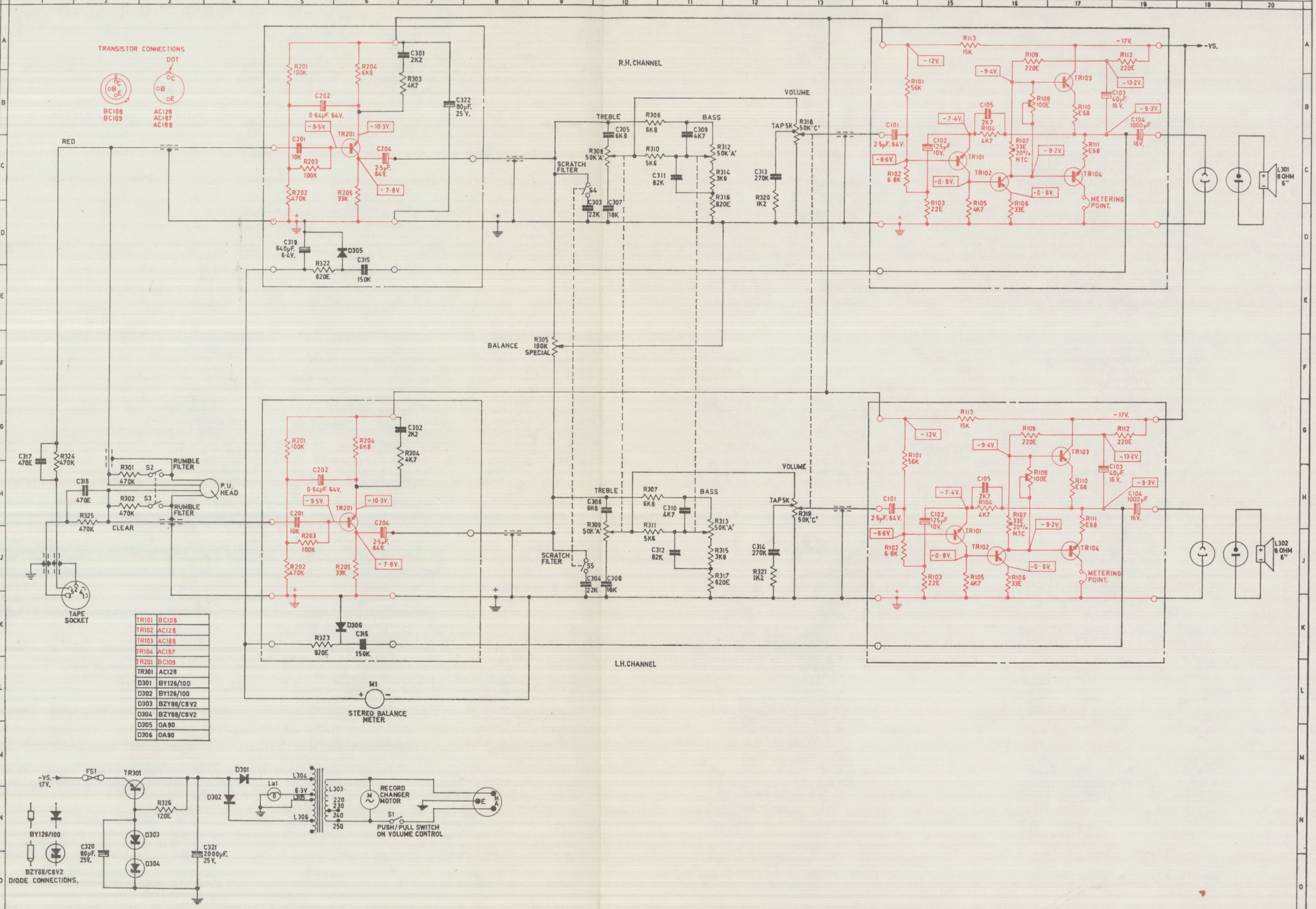

TR101	BC108
TR102	AC128
TR103	AC188
TR104	AC187
TR201	BC109
TR301	AC128
D301	BY126/100
D302	BY126/100
D303	BZY88/C8V2
D304	BZY88/C8V2
D305	OA90
D306	OA90

POINT	ZONE	UNIT	MODEL APPLICATION

VOLTAGES

R ±10%.

C ±10%, ELECTROLYTICS -10 +50%.

TOLERANCES

300 SERIES COMPONENTS APPEAR ON GF580, 100 & 200 ON UA505. SOME 300 SERIES COMPONENTS APPEAR ON P.W. BOARD. UA505 COMPONENTS PRINTED IN RED.

NOTES