ASTOR

MODEL GF 062
"S 800"

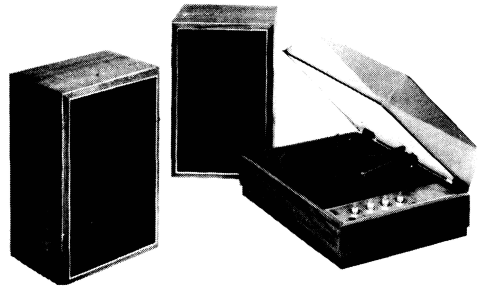

SERVICE DATA

SPECIFICATIONS

Supply source	240 Volts 50 Hz
Power consumption	30 Watts approx.
Speaker impedance	8 ohm
Power output	8 Watts (RMS) per channel

TO REMOVE ESCUTCHEON

Unplug mains lead at power point and loosen two Philips head screws visible through the large holes in the base, until escutcheon is removable from the top.

TO REMOVE RECORD CHANGER

After removal of escutcheon, reach under changer and straighten clip under right hand transit screw. Lift this corner of changer until clip clears cabinet.

Slide changer forward, prising spring from left hand rear "CUP", until left hand transit screw is clear of slot.

ADJUSTMENT OF QUIESCENT CURRENT

CONDITION: Speakers or correct load connected to output terminals. To stabilise amplifier during this adjustment connect a .01 uF ceramic disc capacitor across meter leads.
No input signal and volume control at minimum.

Connect DC mA meter in place of Link A–B.

Switch set on and allow current to stabilise.

Adjust preset control circuit No. 79 until meter reads 10 mA ± 2 mA.

Replace Link A–B.

Connect DC mA meter in place of Link C–E and adjust circuit No. 80 for the same reading.

Replace Link C–E.

AMPLIFIER GAIN TEST

CONDITION: Volume, treble and bass controls at maximum, and balance control for maximum output to the channel being measured.

Connect Output meter to output of one channel.

Set audio generator frequency to 1000 Hz and connect to both inputs.

With output of generator at 60 mV the amplifier output should be at least 50 mW.

Transfer output meter to other channel and repeat above operation.

The difference between the two outputs should be within 3 dB.

SPEAKER PHASING

When replacing speakers, note lead connections to ensure correct phasing when reconnecting.

STYLUS PRESSURE

The stylus pressure should be approx. 5 grammes.

7135-988-01

RADIO CORPORATION PTY. LTD.
DIVISION OF
ELECTRONIC INDUSTRIES LTD.

AUGUST, 1972

PARTS LISTS – PRINTED CIRCUIT BOARD

CAPACITORS:

Circuit No.	Value	Description	Tol. ±%	V.W.	Part Number
1, 2	.001uF	Ceramic	20		4008-040-23
5, 6	.047uF	Polyester	10	100	2002 351 00001
7, 8	.47uF	Electrolytic		50	4005-056-05
9	47uF	Electrolytic		25	4005-040-08
11, 12	4.7uF	Electrolytic		50	4005-055-08
13, 14	.001uF	Polyester	10	100	4009-010-20
15, 16	.01uF	Polyester	10	100	4009-014-38
17, 18	.0047uF	Polyester	10	100	4009-017-20
19, 20	.047uF	Polyester	10	100	2002 351 00001
21, 22	4.7uF	Electrolytic		50	4005-055-08
23, 24	.47uF	Electrolytic		50	4005-056-03
25, 26	220uF	Electrolytic		16	4005-059-03
27, 28	100pF	Ceramic	20		4008-006-15
29	100uF	Electrolytic		50	4005-002-56
30, 31	470uF	Electrolytic		25	4005-062-01
32, 33	.0022uF	Polyester	10	100	4009-002-20

RESISTORS:

Circuit No.	Value	Description	Tol. ±%	W	Part Number
35, 36	100K	Carbon	10	½	4022-013-02
37, 38	1M5	Carbon	10	½	4022-046-01
39	2M+2M	Volume Control ganged with "Z5" curve, tapped at 900K			4034-008-06
41, 42	680K	Carbon	10	½	4022-055-01
43, 44	68K	Carbon	10	½	4022-048-01
45, 46	100K	Carbon	10	½	4022-013-02
47, 48	18K	Carbon	10	½	4022-018-01
49, 50	3K3	Carbon	10	½	4022-006-01
51	100K	Balance Control with "Z6" curve			4032-001-23
53	250K+250K	Treble Control ganged with "C" curve			4034-005-06
55, 56	220K	Carbon	10	½	4022-063-01
57, 58	22K	Carbon	10	½	4022-026-02
59, 60	27K	Carbon	10	½	4022-073-01
61, 62	22K	Carbon	10	½	4022-026-02
63	250K+250K	Bass Control ganged with "C" curve			4034-005-06
64	2K2	Carbon	10	½	4022-021-02
65, 66	2K2	Carbon	10	½	4022-021-02
67, 68	270K	Carbon	10	½	4022-019-01
69, 70	470K	Carbon	10	½	4022-045-03
73, 74	68K	Carbon	10	½	4022-048-01
75, 76	4K7	Carbon	10	½	4022-005-01
77, 78	12	Carbon	10	½	4022-069-01
79, 80	100	Preset Potentiometer			4025-031-03
81, 84	15	NTC Thermister			4021-075-02
85, 86	1K	Carbon	10	½	4022-008-01
87, 88	390	Carbon	10	½	4022-058-04
89	22	Carbon	10	½	4022-033-01
90, 91	.68	W.W.	10	½	4024-059-01
92, 93	.68	W.W.	10	½	4024-059-01
95, 96	470	Carbon	10	½	4022-016-01
97, 98	470K	Carbon	10	½	4022-045-03

POWER SUPPLY CHASSIS:

Circuit No.	Description	Tol. ±%	V.W.	Part Number
1	.01uF Polyester	10	630	4009-014-40
2	2200uF Electrolytic		35	4005-060-04
7, 8	BY126/100			4127-131-01
11	Mains Transformer			4041-183-01
12	Mains Lead and Plug			4078-069-03

TRANSISTORS:

Circuit No.	Description
99, 100	BC149 Pre-amplifier
101, 102	BC147 Amplifier
103, 104	OC9264 Driver
105, 106	AD161 Output) Matched Pairs
107, 108	AD162 Output) Matched Pairs

MISCELLANEOUS:

Circuit No.	Description	Part Number
10	Record changer (BSR C123/A2) includes Tetrad Cartridge 2C2 SA Stylus C2S (GOLDRING S464)	4060-023-01
13	Tape Socket	7222-201-01
14, 16	7 Pin Connector	7222-220-01
15	Radio Socket	7222-172-01
17, 18	Speaker Socket Assembly	7222-196-01
19, 20	Speaker Lead and Plug Assembly	4078-128-01
21, 22	Speaker (Plessey C6LX00/42/8)	4056-003-13
23	Headphone Socket	7122-003-02

MECHANICAL:

Description	Part Number
Knobs (4)	7124-531-01
Spring (Knob Insert)	7225-035-01
Lid	7132-093-01
Hinge (2)	7112-079-01
Stop Cab. (2) Lid (1)	7228-043-02
Stop Lid (1)	7228-043-12
Screw (Lid Hinge)	7196-275-11
Dome Nut (Lid Hinge)	7146-726-01
Designation Metcal (Control panel)	7008-587-01
Retainer (1) Lid Stop	7185-047-01

STYLING:

	CORINITE		VINYL CLAD	
	Walnut	Teak	Walnut	Teak
Cabinet	7038-050-52	7038-050-54	7038-050-62	7038-050-64
Speaker Box	7024-170-52	7024-170-54	3102 307 95021	3102 307 95011

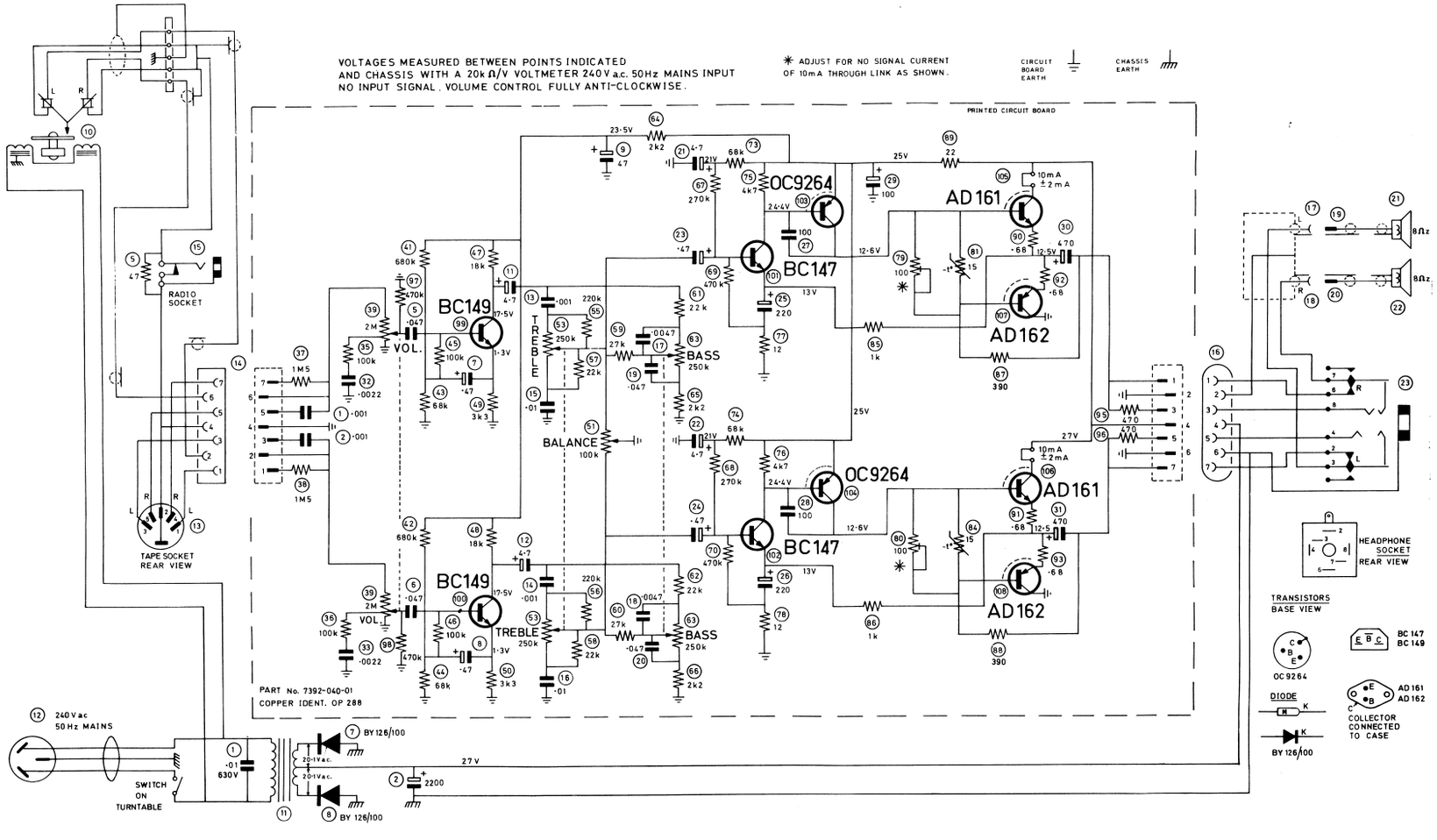

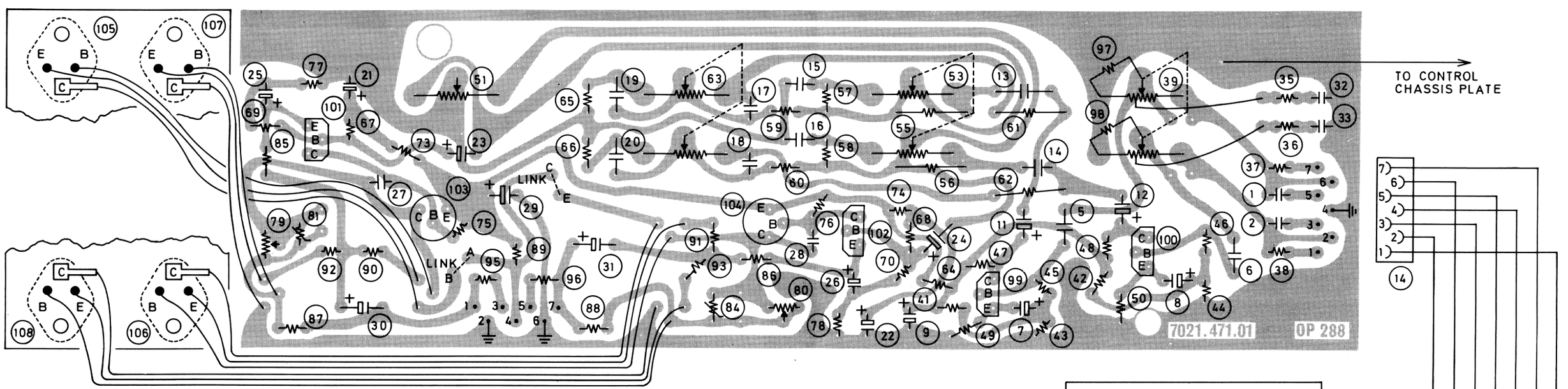

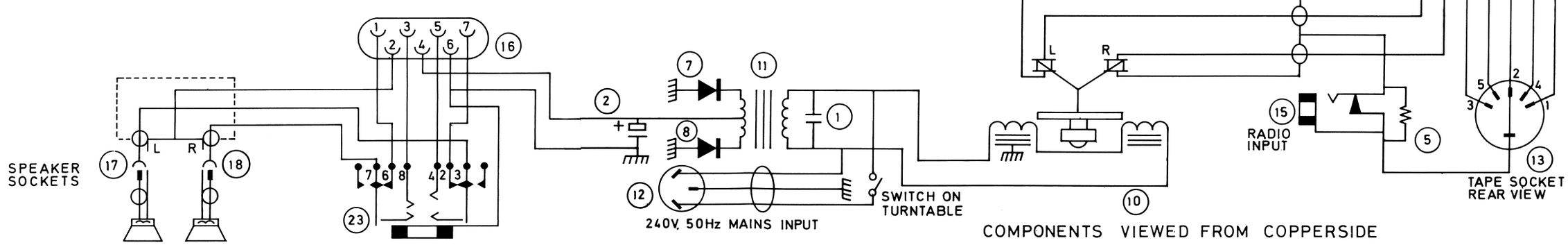

COMPONENTS VIEWED FROM COPPERSIDE