ASTOR

ASTOR ELECTRONICS PTY. LTD.

DIVISION OF ELECTRONIC INDUSTRIES LTD., BOX 183, P.O. SOUTH MELBOURNE

Reg. Office: Astor House, 161-173 Sturt St., South Melbourne.

ASTOR MODEL "GB023"

7 TRANSISTOR BROADCAST BAND RECEIVER

AND A FOUR-SPEED RECORD PLAYER FOR OPERATION FROM 240 VOLT 50 Hz SUPPLY MAINS

Tuning Range:	525 - 1610 KHz
Intermediate Frequency:	455 KHz
Power Output:	1 Watt
Supply Source:	240 Volt 50 Hz
Power Consumption:	Radio - 12 Watts approx.
	Gramo - 30 Watts approx.

ACCESS TO INTERIOR

Open cabinet lid and remove four screws fastening control panel and motor mounting to cabinet. Lift this section out of cabinet base.

CHASSIS SERIAL NUMBER

Located on metal chassis and is visible when control panel section is removed from cabinet.

CAUTION

Disconnect receiver power lead plug from mains socket before making adjustments inside the cabinet.

Information contained herein must not be reproduced without prior written permission from Astor Electronics Pty. Ltd.

Circuit No.	Miscellaneous	Part Number
50		
51	Transistor - type AT319 - Mixer/osc.	4128-118-01
52	Diode- type 1N295 - overload	4127-001-01
53	Transistor - type AT319 - I.F.Amp.	4128-118-01
54	Transistor - type AT319 - I.F.Amp.	4128-118-01
55	Diode - type 1N295 - A.G.C.	4127-001-01
56	Diode - type AA119 - Detector	4127-037-01
57	Osc. Coil	4043-064-01
58	No.1 I.F. Transformer, orange/green,455 Kc/s	4044-031-01
59	No.2 I.F. Transformer, orange/blue, 455 Kc/s	4044-031-02
60		
61	No.3 I.F. Transformer, orange/violet, 455 Kc/s	4044-031-03

Mechanical

Part Number	Description
7167-058-01	Pin (6) Circuit Board Terminations
7120-026-01	Insulator (12) glass, transistor mount

R.F. MODULE. Part No. 4067-002-01

Circuit No.	Value	Capacitors Description	Tol ±	Rating V.DCW	Part Number
1	.01uF	Disc Ceramic		25	4008-039-06
2	.01uF	Disc Ceramic		25	4008-039-06
3	220pF	Polystyrene	5%	100	4004-005-03
4	.022uF	Disc Ceramic		25	4008-010-05
5	10uF	Electrolytic		6	4005-007-12
6	.022uF	Disc Ceramic		25	4008-010-05
7	.022uF	Disc Ceramic		25	4008-010-05
8	220pF	Polystyrene	5%	100	4004-005-03
9	.1uF	Disc Ceramic		25	4008-004-04
10					
11	.1uF	Disc Ceramic		25	4008-004-04
12	.022uF	Disc Ceramic		25	4008-010-05
13	.022uF	Disc Ceramic		25	4008-010-05
14	.022uF	Disc Ceramic		25	4008-010-05
15	100pF	Ceramic	5%	500	4008-006-11
16	220pF	Polystyrene	5%	100	4004-005-03
17	100pF	Ceramic	5%	500	4008-006-11
18	.22uF	Disc Ceramic		25	4008-053-01
19	80uF	Electrolytic		25	4005-030-03
20					
21	100pF	Ceramic		25	4008-006-11
22	.01uF	Disc Ceramic		25	4008-039-06
23					
24					

Circuit No.	Value Ohms	Resistors Description	Tol ±	Rating Watts	Part Number
25					
26	47K	Carbon	10%	½	4022-051-03
27	10K	Carbon	10%	½	4022-004-01
28	2.7K	Carbon	10%	½	4022-043-01
29	120K	Carbon	10%	½	4022-031-01
30	10K	Carbon	10%	½	4022-004-01
31	560	Carbon	10%	½	4022-010-01
32	1K	Carbon	10%	½	4022-008-01
33	10K	Carbon	10%	½	4022-004-01
34	100K	Carbon	10%	½	4022-013-02
35	1K	Carbon	10%	½	4022-008-01
36					
37	2.2K	Carbon	10%	½	4022-021-02
38	4.7K	Carbon	10%	½	4022-005-01
39	33K	Carbon	10%	½	4022-059-03
40					
41	68	Carbon	10%	½	4022-024-01
42	820	Carbon	10%	½	4022-009-01
43	1K	Carbon	10%	½	4022-008-01
44	330K	Carbon	10%	½	4022-047-01
45	150K	Carbon	10%	½	4022-038-01
46	27K	Carbon	10%	½	4022-073-01
47					
48					
49					

AUDIO MODULE PART NO. 4067-007-01

CIRC. NO.	VALUE	CAPACITORS DESCRIPTION	TOL ±	RATING V.DCW.	PART NUMBER
1	.15uF	Polyester	10 %	160	4009-020-04
2	10uF	Electrolytic		16	4005-007-19
3	200uF	Electrolytic		10	4005-006-14
4	470pF	Ceramic, disc	20%	500	4008-052-08
5	400uF	Electrolytic		10	4005-042-07
6					
7					
8					

CIRC. NO.	VALUE	RESISTORS DESCRIPTION	TOL ±	RATING WATTS	PART NUMBER
9	3.3K	Carbon	10%	.5	4022-006-01
10	1.2M	Carbon	5%	.5	4022-064-08
11	2.2M	Carbon	5%	.5	4022-036-02
12	47	Carbon	5%	.5	4022-041-11
13	150K	Carbon	10%	.5	4022-038-01
14	12K	Carbon	10%	.5	4022-029-01
15	820	Carbon	10%	.5	4022-009-01
16	4.7K	Carbon	5%	.5	4022-005-15
17	100	Potentiometer, Quiescent Current Adj.			4025-031-03
18	50	N.T.C.			4021-069-03
19	1	Wire Wound	10%	.5	4024-008-02
20	1	Wire Wound	10%	.5	4024-008-02
21	680	Carbon	10%	.5	4022-028-02
22					
23					
24					

CIRC. NO.	MISCELLANEOUS	PART NUMBER
25	Transistor - type AT327	4128-125-01
26	Transistor - type AT415	4128-183-01
27	Transistor - type AC187) matched	4128-107-01
28	Transistor - type AC188) pair	

PART NUMBER	MECHANICAL
7111-007-01	Heat Sink (2) output transistors
7167-058-01	Pin (7) board terminations
7120-026-01	Insulator (5) glass, transistor mount

ADJUSTMENT OF COLLECTOR CURRENT

This should be performed after an audio module or output transistors or associated componentry have been replaced.

EQUIPMENT — Current Meter - 0-50mA.DC. terminated with lead and socket assy. Part No. 4078-018-01, positive terminal to red sleeve.

CONDITIONS — Volume Control set at minimum. No input signal. Connect a 15 ohm impedance speaker to receiver socket. Remove link from pins "O" and "N" on Audio Module board. Place meter lead socket on to test pins "O" and "N". Connector with red sleeving is to be connected to pin "N".

Adjust 100 ohm potentiometer circuit No. 17 until a meter reading of 8mA. ±2mA. is indicated.

Remove meter lead plug and reconnect link to test pins.

AUDIO AMPLIFIER GAIN TEST

Audio Frequency Generator	-	1000Hz - 600 ohms impedance
Output Meter	-	15 ohms
Volume Control	-	maximum, clockwise
Tone Control	-	maximum treble, clockwise
Function Switch	-	GRAM position

Disconnect pick-up leads from cartridge.
Connect audio generator output leads to pick-up leads.
Disconnect leads from speaker.
Connect 15 ohm impedance output meter to speaker leads.
Set the output of audio generator to 50 millivolts.
The output meter should read a minimum of 50 milliwatts.

Part No.	Mechanical
7132-044-01	Cabinet Lid only (1) Tangerine
7132-044-02	Cabinet Lid only (1) Old Gold
7132-044-03	Cabinet Lid only (1) Sunflower
7132-044-04	Cabinet Lid only (1) Squirrel
7016-137-01	Cabinet Base only (1) Flame
7016-137-02	Cabinet Base only (1) Olive
7016-137-03	Cabinet Base only (1) Mocca
7016-137-04	Cabinet Base only (1) Charcoal
7009-154-02	Speaker Baffle (1)
7201-627-22	Screw (8) 7/8" x No. 6 Phillips Oval Csk. Hd. Speaker Baffle and Motor Board
7265-007-01	Cup Washer (4) Speaker Baffle
7049-011-02	Scratch Plate (2) Cabinet Lid
7049-011-03	Catch (2) Cabinet Lid
7086-088-03	Eyelet (8) Lid Catch and Base Toggle Catch
7086-108-01	Eyelet (2) Hinge
7086-120-01	Eyelet (2) Hinge
7261-119-03	Washer (4) Hinge
7198-176-54	Screw (2) $\frac{3}{8}$" x $\frac{1}{8}$"Whit. Rd. Hd, Hinge
7198-176-57	Screw (2) $\frac{1}{2}$" x $\frac{1}{8}$" Whit. Rd. Hd, Hinge
7262-008-01	Washer (4) $\frac{1}{8}$" Int. Shakeproof, Hinge
7148-702-06	Nut (4) $\frac{1}{8}$" Domed Hinge
7109-099-01	Carrying Handle (1)
7109-073-01	Handle Cover (2)
7109-073-04	Handle Cover Plate (2)
7198-127-20	Screw (2) 5/8" x 5/32" Whit. C'sk. Hd. Handle
7148-203-11	Nut (2) 5/32" Hex. Steel Handle
7021-239-11	Motor Board (1)
7185-035-01	Retainer (2) Power Lead
7124-475-01	Knob Assy (4) Tuning, Volume, Tone, Off, Radio, Gram.
7225-035-01	Spring Insert (4) Knobs
7008-414-01	Motor Board Designation Panel (1)
7070-132-02	Dial Reading (1)

Circ. No.	Value	Capacitors Description	Tol±	Rating V DCW	Part Number
1	3-30pF	Trimmer - Air			4000-025-01 or 04
2	3-30pF	Trimmer - Air			4000-025-01 or 04
3		Two Gang Tuning			4000-043-01
4	330pF	Silvered Mica	2.5%	500	4003-021-03
5	.01uF	Polyester	10%	630	4009-014-19
6	.0047uF	Polyester	10%	270	4009-017-07
7	2000uF	Electrolytic		25	4005-016-05
8	.0033uF	Polyester	10%	270	4009-006-06
9	.0022uF	Polyester	10%	270	4009-002-07
10					

Circ. No.	Value Ohms	Resistors Description	Tol±	Rating Watts	Part Number
11	330	Carbon	10%	.5	4022-011-01
12	470K	Carbon	10%	.5	4022-045-03
13	2M	Volume Control			4032-040-03
14	47K	Carbon	10%	.5	4022-051-03
15	470K	Carbon	10%	.5	4022-045-03
16	5M	Tone Control			4032-037-03

Circ. No.	Miscellaneous	Part Number
17	Diode - Type AD100 - Rectifier	4127-042-01
18	Diode - Type AD100 - Rectifier	4127-042-01
19	Ferrite Rod Aerial	4074-065-02
20		
21	Power Transformer	4041-056-02
22	Motor and Turntable BSR type M100 240V 50 cycle	4060-008-01
	Pick-up Arm Type PU30 and Type X3M Mono High Compliance Cartridge	4070-002-01
23	R.F. Module - refer separate list	4067-002-01
24	Amplifier Module - refer separate list	4067-007-01
25	Function and On-Off Switch - Rotary	4059-226-01
26	Mains Lead and Plug Assembly	4077-074-04
27	Lamp - 12V 1.2W - Power "ON"	4068-003-04
28	Socket - 3 Pin - Less Contacts - Motor Unit	7222-144-01
29	Plug - 3 Pin - Less Contacts - Motor Unit	7171-114-01
30	Speaker 6" x 4" 15 Ohm Impedance Type C64D36/15/15	4056-014-10
31	Switch D.P. ST. Motor	4059-226-01
	Cap Nut for Switch	7308-030-01

Part No.	Mechanical
7173-074-01	Dial Pointer Assy (1)
7005-073-02	Dial Background (1)
7077-043-01	Dial Drum Assy (1)
7174-015-01	Dial Pulley (2)
7120-070-01	Dial Insulator (4)
7225-129-01	Dial Cord Spring (1)
7055-250-01	Clip (2)Dial Cord Pulley
7198-125-08	Screw (4) $\frac{3}{8}$" x 3/32" C'sk. Hd. Dial
7148-001-01	Nut (4) 3/32" Hex. Dial
7224-428-01	Tuning Spindle Assy (1)
7198-801-02	Screw (2) 3/16" x $\frac{1}{8}$" Cup Grub, Dial Drum Assy
7169-449-11	Plate (1) Tuning Gang Mount
7166-001-01	Support Pillar (2) Rod Aerial
7225-078-01	Spring (2) Rod Aerial
7279-005-02	Nut Plate (2) Support Pillar
7198-176-33	Screw (2) $\frac{3}{8}$" x $\frac{1}{8}$" Rd Hd Rod Aerial Mount
7294-110-01	Spacer (6) Module Mounting
7201-576-11	Screw (8) $\frac{3}{8}$" x 4 Posi Hd. Module and Transformer Mounting
7152-751-01	Speednut (2) Transformer Mounting
7215-100-01	Shield (1) Module
7215-101-01	Shield (1) Module Base
7054-051-01	Clamp (1) Mains Lead Anchor
7111-007-01	Heat Sink (2) Transistors AC188/AC187
7231-102-01	Terminal Strip (2) 1E1
7231-203-01	Terminal Strip (1) 2E2
7231-303-01	Terminal Strip (1) 3E2
7231-011-01	Terminal Strip (1) E1
7222-115-01	Socket (1) Dial Lamp
7086-095-02	Eyelet (1) Dial Lamp Socket
7187-810-01	Button (1) Speaker Baffle, above pick-up arm
7060-073-01	Contact (6) motor unit mains lead plug and socket

ALIGNMENT EQUIPMENT

Signal Generator	-	modulated 400Hz
Output Meter	-	15 ohm impedance
Series Capacitor	-	for I.F.T. alignment .1uf Part No. 4006-005-03

Alignment Tools

(a) Flat metal blade each end - Part No. 4121-001-01 for I.F.T. and osc. coil iron core adjustment.

(b) Hexagonal socket type - Part No. 4121-028-02 for trimmer capacitor adjustment.

ALIGNMENT CONDITIONS

Function Switch	-	RADIO position
Volume Control	-	maximum, clockwise
Tone Control	-	maximum treble,clockwise
Output Meter Connection	-	across speaker voice coil
Output Level	-	25 milliwatts
Supply Voltage Source	-	240 Volts 50 Hz

SETTING THE DIAL POINTER

Turn tuning spindle until tuning capacitor plates are in mesh against stop.

Slide pointer along cord until it aligns with end of travel spot on dial reading.

INTERMEDIATE FREQUENCY TRANSFORMER ALIGNMENT

Set tuning control to high frequency end of travel position. Insert .1uF capacitor in series with generator "hot" lead.

Oper. No.	Generator Connection	Generator Frequency	Instructions
1.	to pin on circuit board (Term 3 of rod aerial)	455 KHz	Adjust iron core of 3rd IF trans. for max. output.
2.	As oper. 1	455 KHz	Adjust iron core of 2nd IF trans. for max output.
3.	As oper. 1	455 KHz	Adjust iron core of 1st IF trans. for max output.
4.	Repeat operations 1, 2 and 3.		

BROADCAST ALIGNMENT

A. To inject a signal into the receiver, connect 2ft. of aerial wire to the "hot" terminal of signal generator. Fashion wire into a vertical position.

B. Place receiver so that ferrite aerial is uppermost and horizontal. Tuning end of receiver is to be toward but not less than one foot from generator aerial wire.

Oper. No.	Generator Connection	Generator Frequency	Instructions
1.	Refer Para. A & B	525 KHz	Tuning gang plates fully meshed against end of travel stop. Adjust oscillator coil iron core aud rod aerial adjusting coil for maximum output.
2.	As per oper. 1	1400 KHz	Set tuning pointer to 1400 KHz spot on dial. Adjust oscillator and aerial trimmer capacitors for maximum output.
3.	As per oper. 1	600 KHz	Tune receiver to generator signal and adjust rod aerial coil for max. output
4.	As per oper. 1	1400 KHz	Tune receiver to generator signal. Adjust aerial trimmer capacitor for max. output.

Tuning range after alignment - 525 to 1610 KHz.

CLEANING OF CABINET

Do not polish cabinet, plastic or metal sections with an abrasive material, motor car polish, boot polish or similar household cleaning fluids, as permanent damage may result to the finish of the components.

To restore the lustre of the cabinet, etc. wipe with a soft cloth, dampened with water and lightly polish with a neutral wax.

TRANSPORTING THE UNIT

Before moving the player, always lock the pick-up arm on to the rest pillar provided.

Wind the mains lead around the retainers and insert plug into storage socket on motor board.

PICK-UP STYLUS PRESSURE ADJUSTMENT

The stylus pressure is to be between 6 and 8 grammes. A pressure gauge Part No. 4121-013-01 is available from the Spare Parts Division.

To check the pressure ensure the unit is level with no record on the turntable. Place pressure gauge on the turntable then lower pick-up arm so that stylus locates into the hollow provided on gauge. Adjust for balance and note reading.

Lift the pick-up arm to full extent. Located on the pick-up arm near the pivot point a coiled spring is attached between a lug on the Pivot shaft and a flat metal strip on the pick-up arm. This is fitted under tension.

To adjust the pressure, slide the spring from the strip and refit at correct tension. Increase spring tension to reduce stylus pressure. Decrease spring tension to increase stylus pressure.

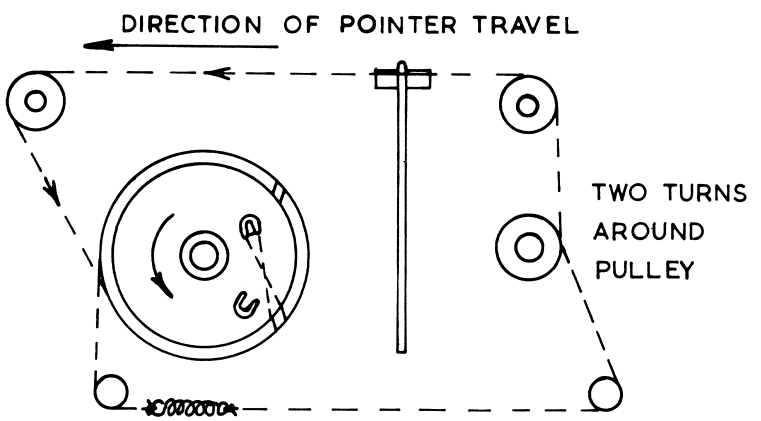

GANG IN FULL CLOCKWISE POSITION
CORD LENGTH 24" REQUIRED
CORD PART No. 1107-002-03

DIAL CORDING DIAGRAM

PB1648

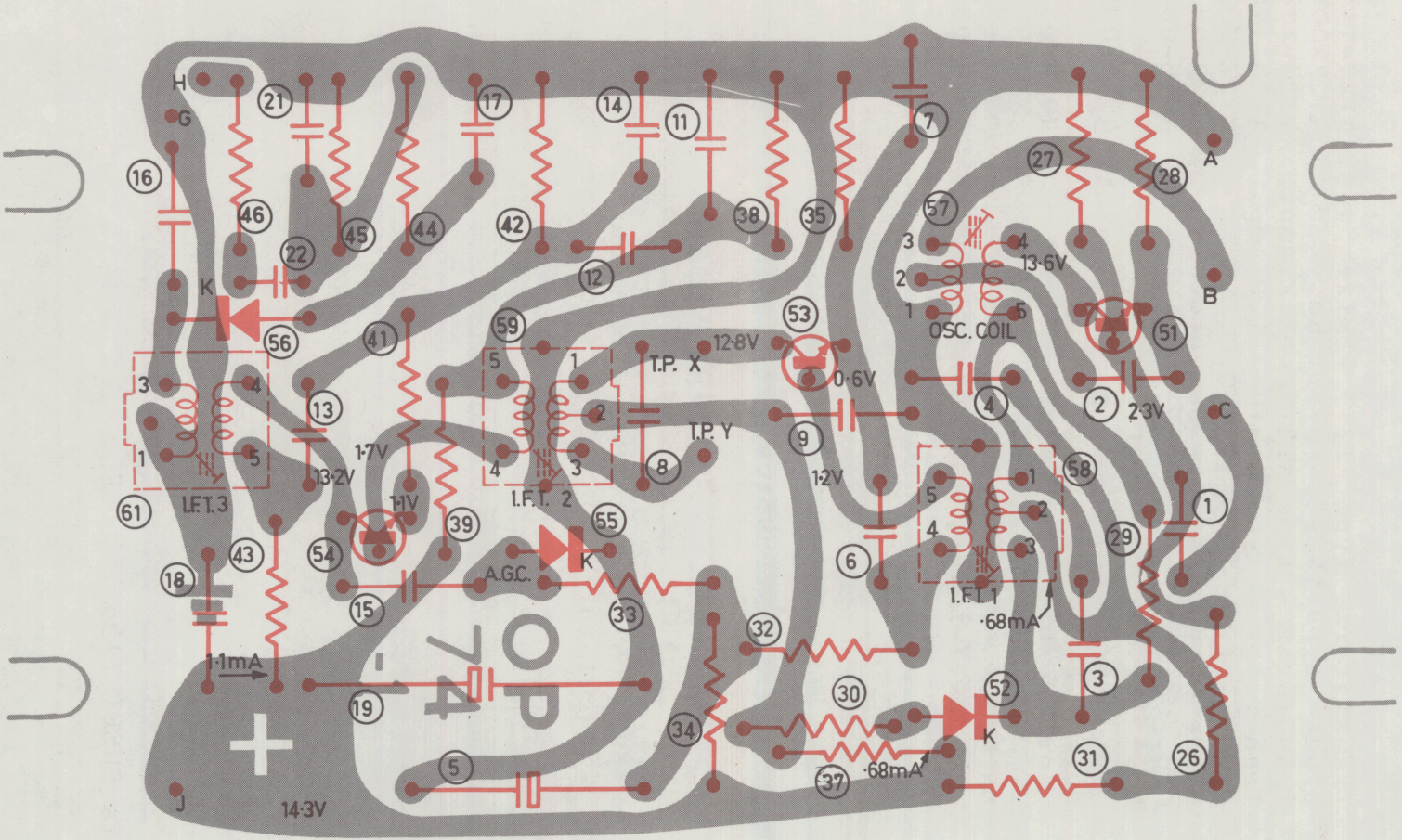
H
G
K
J
A
B
C
I.F.T. 3
I.F.T. 2
I.F.T. 1
T.P. X
T.P. Y
12·8V
0·6V
1·2V
1·7V
13·2V
1·1V
13·6V
2·3V
OSC. COIL
A.G.C.
·68mA
1·1mA
14·3V
TOP 74

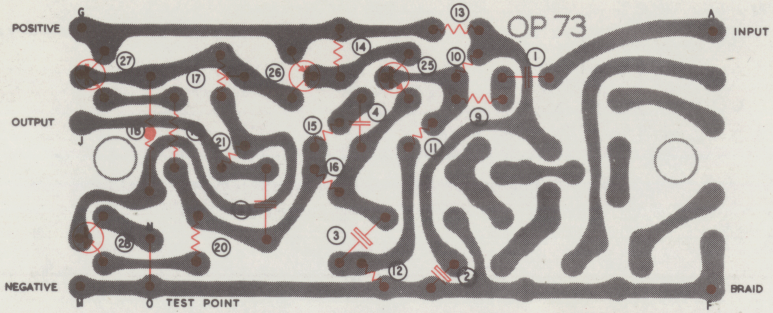

DRAWN	DATE	CHE'D.	APP'D.	DATE
A.J.W.	15·6·67	G.L.	A.G.	10·10·67

PB 1546 A 3

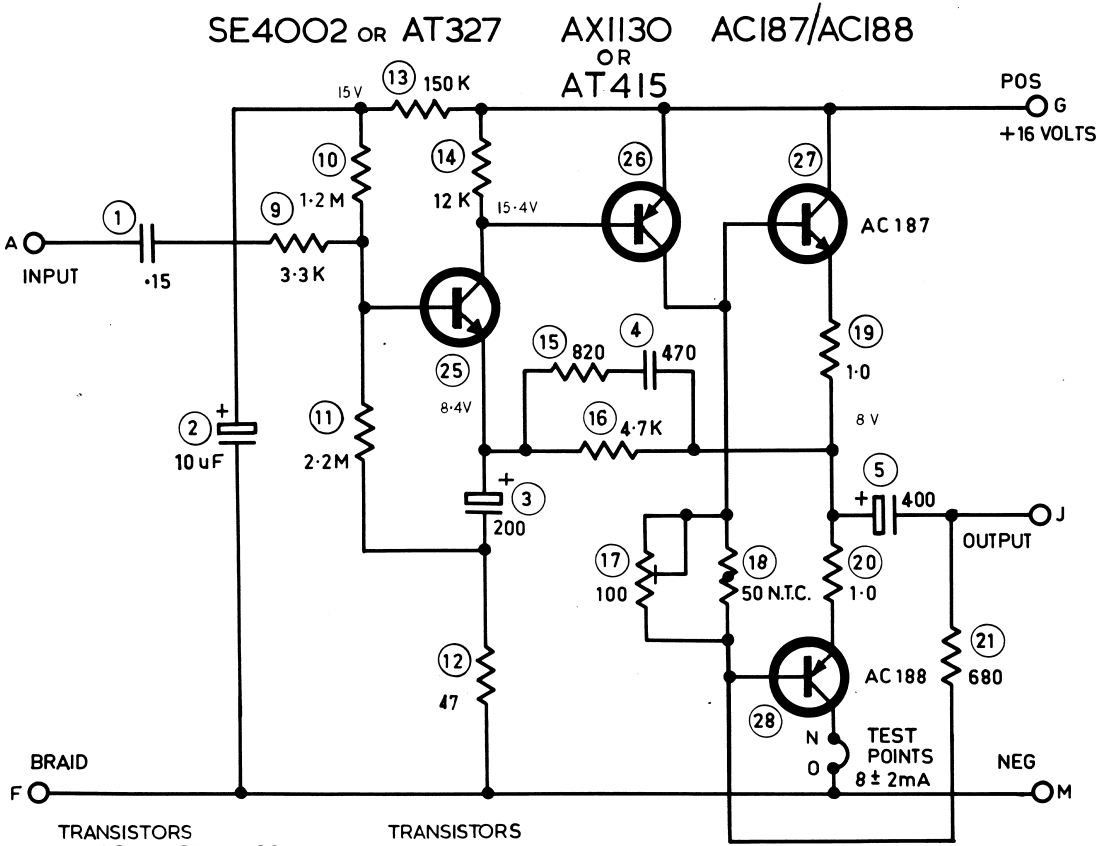

AUDIO MODULE

PART № 4067-007-01

DRAWN	DATE	CH'ED.	APP'D.	DATE
K. J. D.	16. 5. 67.	G.L.	A.H.	13-9-67

ISSUE 2 PB1647

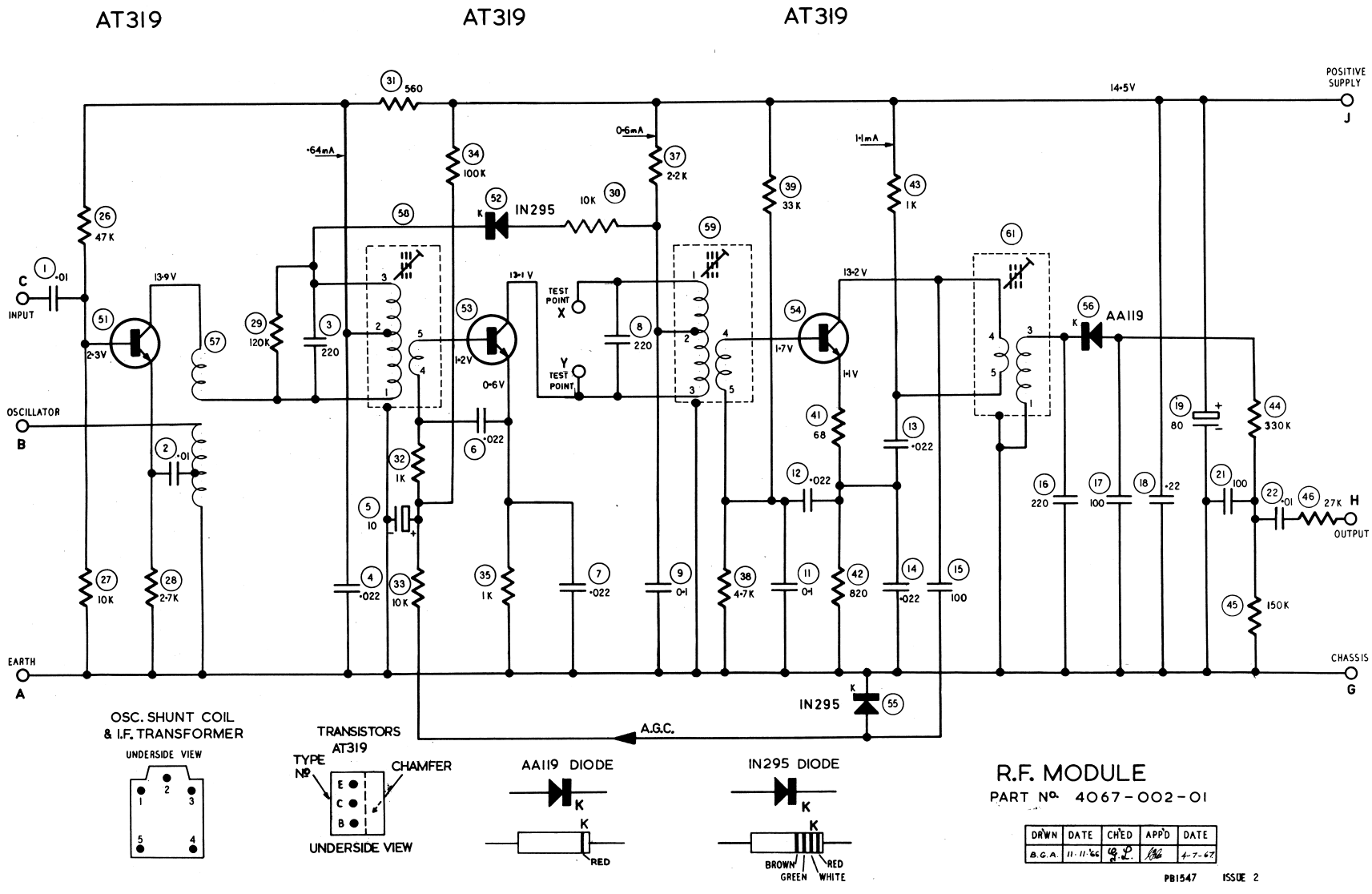
AT319
AT319
AT319
POSITIVE SUPPLY
J
14·5V
31 560
·64mA
34 100K
0·6mA
37 2·2K
1·1mA
39 33K
43 1K
26 47K
52 IN295
10K 30
58
59
61
C
1 ·01
INPUT
13·9V
51
2·3V
57
29 120K
3 220
53
13·1V
TEST POINT X
Y TEST POINT
8 220
1·2V
0·6V
54
13·2V
1·7V
1·1V
56 AA119
OSCILLATOR
B
2 ·01
6 ·022
32 1K
5 10
41 68
13 ·022
12 ·022
19 80
44 330K
16 220
17 100
18 ·22
21 100
22 ·01
46 27K
H
OUTPUT
27 10K
28 2·7K
4 ·022
33 10K
35 1K
7 ·022
9 ·01
38 4·7K
11 ·01
42 820
14 ·022
15 100
45 150K
EARTH
A
CHASSIS
G
IN295
55
A.G.C.
OSC. SHUNT COIL & I.F. TRANSFORMER
UNDERSIDE VIEW
TRANSISTORS AT319
TYPE Nº
CHAMFER
E
C
B
UNDERSIDE VIEW
AA119 DIODE
K
RED
IN295 DIODE
BROWN
GREEN
RED
WHITE
R.F. MODULE
PART Nº 4067-002-01
DRWN DATE CH'ED APP'D DATE
B.G.A. 11·11·66 4-7-67
PB1547 ISSUE 2

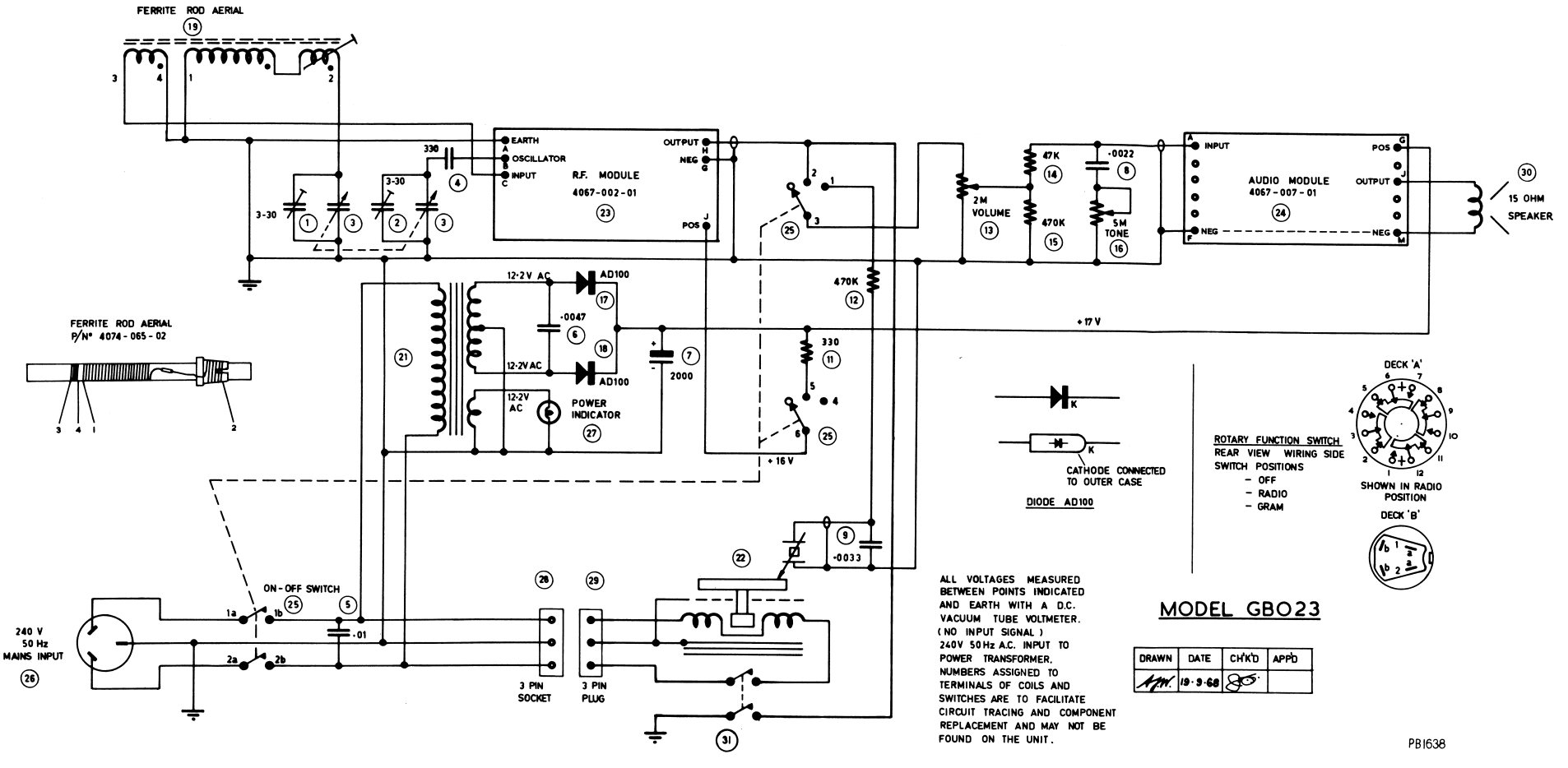
FERRITE ROD AERIAL
19
3
4
1
2
330
4
3-30
1
3
2
3
EARTH
A
OSCILLATOR
B
INPUT
C
R.F. MODULE
4067-002-01
23
OUTPUT
H
NEG
G
POS
J
25
2
1
3
2M
VOLUME
13
47K
14
470K
15
·0022
8
5M
TONE
16
A
INPUT
F
NEG
AUDIO MODULE
4067-007-01
24
G
POS
J
OUTPUT
M
NEG
30
15 OHM
SPEAKER
470K
12
+17 V
12·2V AC
AD100
17
·0047
6
18
12·2V AC
AD100
7
2000
21
12·2V
AC
POWER
INDICATOR
27
330
11
5
4
6
25
+16 V
FERRITE ROD AERIAL
P/Nº 4074-065-02
3 4 1
2
K
K
CATHODE CONNECTED
TO OUTER CASE
DIODE AD100
ROTARY FUNCTION SWITCH
REAR VIEW WIRING SIDE
SWITCH POSITIONS
- OFF
- RADIO
- GRAM
DECK 'A'
SHOWN IN RADIO
POSITION
DECK 'B'
9
·0033
22
26
29
ON-OFF SWITCH
25
5
1a
1b
2a
2b
·01
240 V
50 Hz
MAINS INPUT
26
3 PIN
SOCKET
3 PIN
PLUG
31
ALL VOLTAGES MEASURED
BETWEEN POINTS INDICATED
AND EARTH WITH A D.C.
VACUUM TUBE VOLTMETER.
(NO INPUT SIGNAL)
240V 50Hz A.C. INPUT TO
POWER TRANSFORMER.
NUMBERS ASSIGNED TO
TERMINALS OF COILS AND
SWITCHES ARE TO FACILITATE
CIRCUIT TRACING AND COMPONENT
REPLACEMENT AND MAY NOT BE
FOUND ON THE UNIT.
MODEL GB023
DRAWN
DATE
CH'K'D
APP'D
19·9·68
PB1638