ALIGNMENT EQUIPMENT

Signal Generator	-	Modulated 400 cps
Output Meter	-	8 ohms impedance
Generator Series Capacitor	-	.1uF Part No. 4006-005-03
Alignment Tools		

(a) Flat metal blade end - Part No. 4121-001-01 for I.F.T. and Osc. coil iron core adjustment.

(b) Hexagonal socket type - Part No. 4121-028-02 for trimmer capacitor adjustment.

ALIGNMENT CONDITIONS

Volume Control	-	Maximum, clockwise.
Bass Control	-	Maximum, clockwise.
Treble Control	-	Maximum, clockwise.
Balance Control	-	Clockwise position.
Function Switch	-	"Radio" position, button "in"
Output Level	-	50 milliwatts
Output Meter Connection	-	To right channel speaker socket (speaker disconnected).
Supply Voltage	-	240 volt 50 cycle.

INTERMEDIATE FREQUENCY TRANSFORMER ALIGNMENT

Set tuning control to high frequency end of travel.
Insert .1uF capacitor in series with generator "hot" lead.

Oper. No.	Generator Connection	Generator Frequency	Instructions
1.	To pin "C" on "RF" circuit board(term 3 of rod aerial)	455 Kc/s	Adjust iron core of 3rd IF trans. for max. output.
2.	As oper. 1.	455 Kc/s	Adjust iron core of 2nd IF trans. for max. output.
3.	As oper. 1.	455 Kc/s	Adjust iron core of 1st IF trans. for max. output.

SETTING THE DIAL POINTER

Turn tuning spindle until tuning capacitor plates are fully in mesh.

Slide pointer along cord until the pointer aligns with the end of travel spot on dial reading.

BROADCAST ALIGNMENT

A. To inject a signal into the receiver connect 2 ft. of aerial wire to the "hot" terminal of signal generator. Fashion wire into a vertical position.

B. Place receiver so that ferrite aerial is uppermost and horizontal.
Tuning end of receiver is to be toward but not less than one foot from generator aerial wire.

CHASSIS REMOVAL

1. Disconnect mains lead plug from supply socket then remove rear panel of control cabinet.

2. Identify connections then remove plugs from receiver sockets. Remove external aerial and earth terminal plate also the anchor clips from speaker leads.

3. Remove screws fastening chassis to cabinet.

4. Remove rotary control knobs and the barrel nuts.

5. Slide chassis out of cabinet.

6. Reverse procedure when refitting.

RECORD CHANGER REMOVAL

1. Disconnect mains lead plug from supply socket.

2. Identify connections then remove pick-up lead plugs and motor mains lead plug from changer sockets.

3. Screw down the changer transport screws then turn retainer clips to the vertical position.

4. Lift changer out of the cabinet.

5. Reverse procedure when refitting.

PICK-UP STYLUS PRESSURE ADJUSTMENT

The stylus pressure is to be 4 grammes. A pressure gauge Part No.4121-013-01 is available from the Spare Parts Division.

To check the pressure ensure the unit is level with no record on the turntable. Place pressure gauge on the turntable then lower pick-up arm so that stylus locates into the hollow provided on gauge. Adjust for balance and note reading.

To adjust the pressure refer to details in record changer booklet or turntable instruction disc.

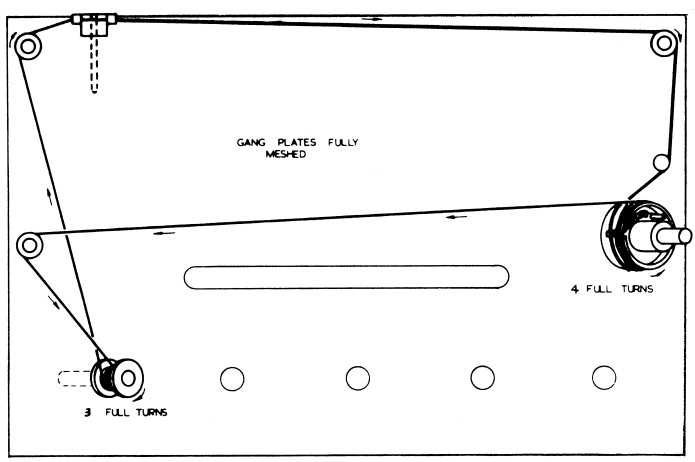

CHASSIS SERIAL NUMBER

The number is stamped into the rear wall of the chassis and may be viewed when the cabinet back is removed.

CABINET COMPONENTS

7124-438-11	Knob (5) controls, rotary
7124-440-01	Knob (2) grey, push
7124-440-02	Knob (4) black, push
7124-440-03	Knob (1) red, push
7124-440-04	Knob (1) light grey, push
7055-536-01	Clip (16) push knobs
7173-068-02	Pointer Assy (1)
4068-018-01	Indicator (1) POWER 'ON'
4060-012-01	Record Changer - Garrard SL65
REPLACEMENT STYLI	ACOS GP94-1 cartridge, ceramic. diamond stereo, sapphire 78 Goldring No.D97 or Genacs No.255
7150-854-32	Barrel Nut (3)
7261-484-03	Washer (3) barrel nut
7215-098-01	Shield (1) chassis beneath controls
7070-131-01	Dial Reading (1)
7048-010-01	Caster (12) cabinet and speaker boxes
7112-057-01	Hinge - piano type, 2ft. 6 ins. required
7227-042-01	Lid Stay (1)
7159-003-01	Felt Pad (2)
7112-061-01	Hinge (4) record storage
7128-007-01	Latch (2) record storage
7049-016-01	Catch (2) nylon, record storage
7008-353-06	ASTOR badge (3)
7310-014-01	Nut (4) badge
7265-007-01	Cup Washer (4) mt. board
7201-627-22	Screw (4) 7/8"x No.6 oval csk.hd. mt. board
4056-006-27	Speaker (2) 5"dia. type 5FX00/128/8
4056-015-05	Speaker (2) 8"x 4" type 84H00/SK1627/8
4056-002-16	Speaker (4) 8"dia. type C8M00/37/15
7102-099-01	Gasket (2) rear of 5" speaker
1033-001-30	Fabric - Sarlon 0717D, $3\frac{1}{2}$ sq.ft. required
1072-064-01	Felt - $6\frac{1}{4}$ sq.ft. required
4078-030-01	Connecting Lead (2) 12ft. speaker boxes to receiver
7028-704-04	Bracket (2) plug mt. speaker boxes
7169-016-01	Spacer (2) plug mt. speaker boxes
7053-153-01	Speaker Crossover Network (1) per box consists of:
4005-010-27	8uF 40V. Electrolytic Capacitor
4005-009-14	16uF 40V. Electrolytic Capacitor
4009-031-04	2uF 200V.Polyester Capacitor
7171-117-01	Plug - 4 pin
4048-059-01	Choke
7293-012-02	Spacer (2) choke mt.

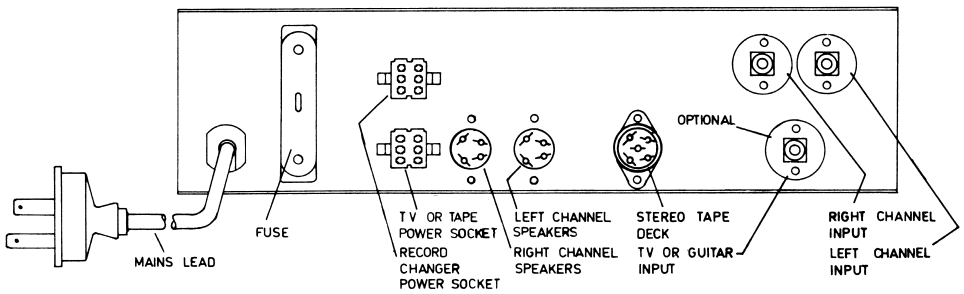

7126-485-01 CONNECTIONS TO REAR OF RADIO CHASSIS

CIRC. NO.	VALUE	CAPACITORS DESCRIPTION	TOL ±	RATING V.DCW	PART NUMBER
1	3-30pF	Trimmer			4000-025-02
2		2 Gang Tuning			4000-042-01
3	3-30pF	Trimmer			4000-025-02
4	.33uF	Polyester	10	160	4009-005-14
5	.33uF	Polyester	10	160	4009-005-14
6	50uF	Electrolytic		25	4005-001-17
7	100pF	Disc Ceramic N750	5	500	4008-006-11
8	100uF	Electrolytic		40	4005-002-44
9	500uF	Electrolytic		50	4005-014-17
10					
11	640uF	Electrolytic		25	4005-046-02
12					
13	640uF	Electrolytic		25	4005-046-01
14	.22uF	Polyester	10	160	4009-007-14
15	.01uF	Polyester	10	630	4009-014-19
16	.22uF	Disc Ceramic		25	4008-053-01
17					
18	.22uF	Disc Ceramic		25	4008-053-01
19					
20					

CIRC. NO.	VALUE OHMS	RESISTORS DESCRIPTION	TOL ±%	RATING WATTS	PART NUMBER
21					
22					
23	5.6K	Carbon	10	.5	4022-022-02
24	5.6K	Carbon	10	.5	4022-022-02
25		Volume Control - ganged potentiometers 250K ohm tapped at 25K ohm			4034-012-01
26	250K	Treble Control - ganged potentiometers			4034-010-01
27	250K	Bass Control - ganged potentiometers			4034-010-01
28	500K	Balance Control			4032-021-06
29	47K	Carbon	10	.5	4022-051-03
30	47K	Carbon	10	.5	4022-051-03
31	3.3K	Carbon	10	.5	4022-006-01
32	4.7K	Carbon	10	.5	4022-005-01
33	22K	Carbon	10	.5	4022-026-02
34	1.8K	Carbon	10	.5	4022-030-01
35	120	Carbon	10	.5	4022-039-01
36	82	Carbon	10	.5	4022-070-01
37	15	Disc N.T.C.			4021-075-01
38	.68	Wire Wound	10	.5	4024-059-01
39	.68	Wire Wound	10	.5	4024-059-01
40	150	Carbon	10	1	4022-052-03
41	15	Disc N.T.C.			4021-075-01
42	.68	Wire Wound	10	.5	4024-059-01
43	.68	Wire Wound	10	.5	4024-059-01

CIRC. NO.	MISCELLANEOUS	PART NUMBER
44	Transistor type BDY-20	4128-136-01
45	Transistor type AY8115	4128-158-01
46	Zener Diode type BZY88-C30	4127-073-09
47	Diode type AD100	4127-042-01
48	Diode type AD100	4127-042-01
49	Diode type AD100	4127-042-01
50	Diode type AD100	4127-042-01
51	Transistor type AD161)matched	4128-109-01
52	Transistor type AD162)pair	
53	Transistor type AD161)matched	4128-109-01
54	Transistor type AD162)pair	
55	R.F. Module - refer separate list	4067-002-01
56	Tone Control Module - right refer separate list	4067-016-01
57	Tone Control Module - left refer separate list	4067-016-01
58	Driver Module - right refer separate list	4067-017-01
59	Driver Module - left refer separate list	4067-017-01
60	Audio Outputs and Drivers Module	7392-022-01
61	Aerial Loading Coil	4036-051-01
62	Rod Aerial	4074-064-01
63		
64	Power Transformer	4041-068-01
65	Record Changer Unit refer separate list	
66	Function Switch eight pushbuttons	4059-192-01
67	Socket- Tape unit Input	7222-152-01
68	Socket - Pick-up Input	7222-157-01
69	Socket - Pick-up Input	7222-157-01
70	Power Transformer - Tape	4041-070-01
71	Socket - 5 pin 'DIN' Tape Input and Output	7222-141-01
72	Terminal Plate Assy ext. aerial and earth consists of:	
	Plate	7169-426-01
	Terminal (2)	7244-009-01
	Screw (2)	7198-909-01
73	Socket - 5 pin - Power and Output from Module	7222-152-01
74	Socket - 4 pin - Speaker Connection	7222-052-01
75	Socket - 4 pin - Speaker Connection	7222-052-01
76	Plug - 5 pin - Power and Output from Module	7171-120-01
77	Socket - 2 pin - Audio Input to Driver Module	7171-121-01
78	Socket - 2 pin - Audio Input to Driver Module	7171-121-01
79	Socket Assy - Pick-up Output on Record Charger. Not fitted some models	7222-140-02
80	Plug- Pick-up Output Connecting lead	7171-110-01
81	Plug - Pick-up Output connecting lead	7171-110-01
82	Plug - Pick-up Output connecting lead. Not fitted some models.	7171-110-01
83	Plug - Pick-up Output connecting lead	7171-110-01
84	Plug - 3 pin, less contacts, motor unit	7171-114-01
85	Socket - 3 pin, less contacts, motor unit	7222-144-01
86	Socket - 6 pin, less contacts, mains to motor unit	7222-111-01
87	Plug - 6 pin, less contacts, mains to motor unit	7171-087-01
88	Plug - 6 pin, less contacts, mains to 100V Tape trans.	7171-087-01
89	Socket - 6 pin, less contacts, mains to 100V Tape trans.	7222-111-01

90	Mains Input Lead and Plug Assy	4077-120-04
91	Lamp - 16 Volt - power 'ON' indicator	4068-003-04
92	Lamp - 16 Volt - dial illumination	4068-003-04
93	Lamp - 16 Volt - dial illumination	4068-003-04
94	Lamp-indicator, cabinet mounted when fitted, see separate list	4068-003-04
95	Lamp - 16 Volt - record compartment illumination, when fitted	4068-003-04
96	Fuse - 1 Amp delayed action	4071-014-01

PART NUMBER	MECHANICAL DESCRIPTION
7174-015-01	Pulley (3) dial cord
7055-250-01	Clip (3) pulleys
7224-007-04	Spindle Assy (1) tuning
7077-034-01	Drum (1) dial cord
1107-002-03	Dial Cord - 7ft. required
7225-129-01	Spring (2) dial cord
7222-115-01	Socket (3) dial lamp
7055-291-51	Clip (3) socket mt.
7031-017-01	Bush (4) tuning gang mt.
7106-032-01	Grommet (4) tuning gang mt.
7196-067-03	Screw (4) 5/16"x No.4BA csk.hd.
7166-011-01	Pillar (2) rod aerial mt.
7055-461-01	Clip (2) rod aerial anchor
7279-005-01	Nut Plate (2) pillar mt.
7345-006-01	Cord Anchor (1) mains lead
7169-558-01	Fuse Holder Assy (1)
7065-206-01	Cover (1) fuse
7198-126-20	Screw (2) $\frac{1}{4}$"x $\frac{1}{8}$"Whit.csk.hd.fuse cover
7231-102-01	Terminal Strip (2) 3 lug type 1E1
7231-101-01	Terminal Strip (1) 2 lug type 1E
7231-104-01	Terminal Strip (1) 4 lug type 1E3
7231-027-01	Terminal Strip (1) 9 lug type E7E
7231-105-01	Terminal Strip (1) 6 lug type 1E4
7293-037-01	Spacer (2) 'DIN' socket mt.
7294-110-01	Spacer (12) module mt.
7120-201-11	Insulator (4) base shield of tone and driver modules
7120-205-01	Insulator (4) top shield of tone and driver modules
7215-101-01	Shield (4) base of modules
7215-100-01	Shield (4) top of modules
7201-576-01	Screw (12) $\frac{1}{2}$"x No.4 Philips hd. module mt.
7261-138-12	Washer (4) flat steel, 5/16"x 9/64" R.F. mod.
7261-138-26	Washer (4) flat bakelite, 5/16"x 9/64" R.F. mod
7215-124-02	Shield (1) power transformer
7196-275-13	Screw (3) 3/16"x No.6BA ch.hd. pushbutton switch mt.
7120-238-01	Insulator (1) mica, regulator transistor
7120-239-01	Bush (2) regulator transistor mt.
7196-376-17	Screw (2) $\frac{3}{8}$"x No.6BA ch.hd. transistor mt.
7146-007-11	Nut (2) No.6BA hex
7054-088-01	Clamp (1) capacitor mt.

Oper. No.	Generator Connection	Generator Frequency	Instructions
1.	Refer Para. A. & B.	525 Kc/s	Tuning capacitor plates fully meshed against end of travel stop. Adjust oscillator coil from core and rod aerial adjusting ring for maximum output.
2.	As per oper. 1	1610 Kc/s	Set tuning pointer to 1610Kc spot on dial. Adjust oscillator and aerial trimmer capacitors for maximum output.
3.	As per oper. 1	600 Kc/s	Tune receiver to generator signal and adjust rod aerial adjusting ring for maximum output.
4.	As per oper. 1	1400 Kc/s	Tune receiver to generator signal and adjust aerial trimmer capacitor for maximum output.

ADJUSTMENT OF COLLECTOR CURRENT

This should be performed after a driver module or output transistors or associated componentry have been replaced.

EQUIPMENT Current Meter - 0-50mA. DC. terminated with lead and socket assy. Part No.4078-018-01, positive terminal to red sleeve.

CONDITIONS Volume Control set at minimum. No input signal.
Connect an 8 ohm impedance speaker to receiver socket.
Remove link from pins "O" and "N" on Driver Module board.
Place meter lead socket on to test pins "O" and "N".
Connector with red sleeving is to be connected to pin "N".

Adjust 100 ohm potentiometer circuit No.15 until a meter reading of 20mA $\pm$2mA. is indicated.

Remove meter lead plug and reconnect link to test pins.

AUDIO AMPLIFIER GAIN AND BALANCE TEST

Audio Frequency Generator	-	1000 cps. - 600 ohms impedance.
Output Meter	-	8 ohms
Volume Control	-	Maximum, clockwise
Bass Control	-	Maximum, clockwise
Treble Control	-	Maximum, clockwise
Balance Control	-	Clockwise position
Function Switch	-	GRAMO button "in" MONO button "out"

Disconnect pick-up leads from input sockets.
Connect audio generator output leads to an input socket.
Connect an 8 ohm speaker to one output socket and the output meter to the other output socket.
Set the output of audio generator to 16 millivolts.
With equipment connected as above, the output meter should read a minimum of 50 milliwatts.
Exchange output meter and speaker connections to opposite channels. Turn balance control to anticlockwise position.
Difference in output between the two readings must not exceed 2dB.

SPEAKER PHASING

It is essential that the speakers be phased correctly.

If a speaker has to be removed for service, note the lead connections to ensure correct phasing when reconnecting.

A method used for checking the phasing of the speakers is detailed in the following paragraphs.

1. Play a monophonic record.

2. To conduct the following test the speaker cabinets should be spaced about six feet apart and the listener should be located about four feet out in front of the centre point between the two cabinets.

3. If the phasing is correct the reproduced sound will appear to be radiated from this centre point.

4. With incorrect phasing the quality of reproduction will be poor, it will appear to be lacking in bass response and will appear to be radiated from both speaker cabinets.

5. If the speakers are incorrectly phased reverse the leads connected to the voice coil terminals of the large speakers then repeat the test detailed above.

NOTE: That the terminal colours or symbols on each 'small' speaker correspond with the adjacent large speaker connections.

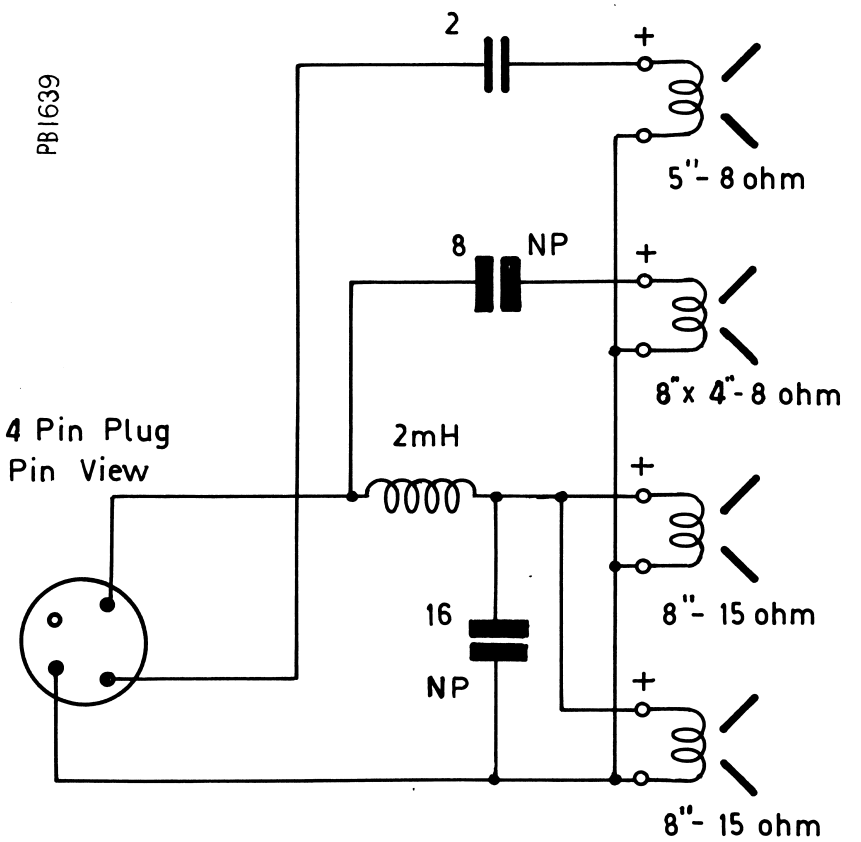

WIRING DIAGRAM — SPEAKER BOX

DRIVER MODULE PART NO. 4067-017-01

CIRCUIT NO.	VALUE	CAPACITOR DESCRIPTION	TOL ±	RATING V.DCW.	PART NUMBER
1	2uF	Electrolytic		25	4005-005-12
2	4uF	Electrolytic		40	4005-045-02
3	250uF	Electrolytic		15	4005-011-15
4	.0068uF	Polyester	10%	400	4009-004-08
5	100pF	Disc Ceramic	5%	500	4008-006-11
6					

CIRCUIT NO.	VALUE OHMS.	RESISTORS DESCRIPTION	TOL ±	RATING WATTS	PART NUMBER
7	2.2K	Carbon	10%	.5	4022-021-02
8	47K	Carbon	10%	.5	4022-051-03
9	100K	Carbon	10%	.5	4022-013-16
10					
11	150K	Carbon	5%	.5	4022-038-11
12	4.7K	Carbon	10%	.5	4022-005-01
13	12	Carbon	5%	.5	4022-069-09
14	1K	Carbon	5%	.5	4022-008-14
15	100	Potentiometer tab. mount			4025-031-03
16	270	Carbon	10%	1	4022-071-03
17	22	Carbon	10%	.5	4022-033-01
18					

CIRCUIT NO.	MISCELLANEOUS	PART NUMBER
19		
20		
21	Transistor - Type AT 327	4128-125-01
22	Transistor - Type 40406	4128-147-01

MECHANICAL DESCRIPTION	PART NUMBER
Pin (12) circuit board termination	7167-058-01
Insulator (2) glass, transistor mount	7120-026-01
Heat Sink (1)	7111-053-02

TONE CONTROL MODULE. PART NO.4067-016-01

CIRCUIT NO.	VALUE	CAPACITORS DESCRIPTION	TOL ±	RATING V.D.C.W.	PART NUMBER
1.	.0047uF	Polyester	10%	400	4009-017-06
2.	.1uF	Polyester	10%	160	4009-008-20
3.	3uF	Electrolytic		6	4005-034-01
4.	.068uF	Polyester	10%	160	4009-013-08
5.	2uF	Electrolytic		25	4005-005-12
6.	2.5uF	Electrolytic		16	4005-035-03
7.	2.5uF	Electrolytic		16	4005-035-03
8.	320uF	Electrolytic		2.5	4005-028-01
9.	.001uF	Polyester	10%	400	4009-010-07
10.					
11.	.018uF	Polyester	10%	160	4009-039-01
12.	.018uF	Polyester	10%	160	4009-039-01
13.					
14.					

CIRCUIT NO.	VALUE OHMS.	RESISTORS DESCRIPTION	TOL ±	RATING WATTS	PART NUMBER
15.	4.7M	Carbon	10%	.5	4022-061-01
16.	1K	Carbon	10%	.5	4022-008-01
17.	470K	Carbon	10%	.5	4022-045-03
18.	47K	Carbon	10%	.5	4022-051-03
19.	68K	Carbon	10%	.5	4022-048-01
20.					
21.	390K	Carbon	10%	.5	4022-050-01
22.	680K	Carbon	10%	.5	4022-055-01
23.	68K	Carbon	10%	.5	4022-048-01
24.	1.2K	Carbon	10%	.5	4022-040-01
25.	1M	Carbon	10%	.5	4022-012-02
26.	1M	Carbon	10%	.5	4022-012-02
27.	15K	Carbon	10%	.5	4022-001-02
28.	390K	Carbon	10%	.5	4022-050-01
29.	33K	Carbon	10%	.5	4022-059-03
30.					
31.	15K	Carbon	10%	.5	4022-001-02
32.	33	Carbon	10%	.5	4022-072-01
33.	1K	Carbon	10%	.5	4022-008-01
34.	27K	Carbon	10%	.5	4022-073-01
35.	27K	Carbon	10%	.5	4022-073-01
36.	27K	Carbon	10%	.5	4022-073-01
37.					

CIRCUIT NO.	MISCELLANEOUS	PART NUMBER
38.	Transistor - type AT 337	4128-133-01
39.	Transistor - type AT 337	4128-133-01
40.	Transistor - type AT 327	4128-125-01

MECHANICAL DESCRIPTION	PART NUMBER
Pin (12) circuit board termination	7167-058-01
Insulator (6) glass, transistor mounts	7120-026-01

SERVICE DATA SHEET 7135-768-03

Circuit No.	Miscellaneous	Part Number
50		
51	Transistor - type AT319 - Mixer/osc.	4128-118-01
52	Diode- type 1N295 - overload	4127-001-01
53	Transistor - type AT319 - I.F.Amp.	4128-118-01
54	Transistor - type AT319 - I.F.Amp.	4128-118-01
55	Diode - type 1N295 - A.G.C.	4127-001-01
56	Diode - type AA119 - Detector	4127-037-01
57	Osc. Coil	4043-064-01
58	No.1 I.F. Transformer, orange/green,455 Kc/s	4044-031-01
59	No.2 I.F. Transformer, orange/blue, 455 Kc/s	4044-031-02
60		
61	No.3 I.F. Transformer, orange/violet, 455 Kc/s	4044-031-03

Mechanical

Part Number	Description
7167-058-01	Pin (6) Circuit Board Terminations
7120-026-01	Insulator (12) glass, transistor mount

R.F. MODULE. Part No. 4067-002-01

Circuit No.	Value	Capacitors Description	Tol ±	Rating V.DCW	Part Number
1	.01uF	Disc Ceramic		25	4008-039-06
2	.01uF	Disc Ceramic		25	4008-039-06
3	220pF	Polystyrene	5%	100	4004-005-03
4	.022uF	Disc Ceramic		25	4008-010-05
5	10uF	Electrolytic		6	4005-007-12
6	.022uF	Disc Ceramic		25	4008-010-05
7	.022uF	Disc Ceramic		25	4008-010-05
8	220pF	Polystyrene	5%	100	4004-005-03
9	.1uF	Disc Ceramic		25	4008-004-04
10					
11	.1uF	Disc Ceramic		25	4008-004-04
12	.022uF	Disc Ceramic		25	4008-010-05
13	.022uF	Disc Ceramic		25	4008-010-05
14	.022uF	Disc Ceramic		25	4008-010-05
15	100pF	Ceramic	5%	500	4008-006-11
16	220pF	Polystyrene	5%	100	4004-005-03
17	100pF	Ceramic	5%	500	4008-006-11
18	.22uF	Disc Ceramic		25	4008-053-01
19	80uF	Electrolytic		25	4005-030-03
20					
21	100pF	Ceramic		25	4008-006-11
22	.01uF	Disc Ceramic		25	4008-039-06
23					
24					

Circuit No.	Value Ohms	Resistors Description	Tol ±	Rating Watts	Part Number
25					
26	47K	Carbon	10%	½	4022-051-03
27	10K	Carbon	10%	½	4022-004-01
28	2.7K	Carbon	10%	½	4022-043-01
29	120K	Carbon	10%	½	4022-031-01
30	10K	Carbon	10%	½	4022-004-01
31	560	Carbon	10%	½	4022-010-01
32	1K	Carbon	10%	½	4022-008-01
33	10K	Carbon	10%	½	4022-004-01
34	100K	Carbon	10%	½	4022-013-02
35	1K	Carbon	10%	½	4022-008-01
36					
37	2.2K	Carbon	10%	½	4022-021-02
38	4.7K	Carbon	10%	½	4022-005-01
39	33K	Carbon	10%	½	4022-059-03
40					
41	68	Carbon	10%	½	4022-024-01
42	820	Carbon	10%	½	4022-009-01
43	1K	Carbon	10%	½	4022-008-01
44	330K	Carbon	10%	½	4022-047-01
45	150K	Carbon	10%	½	4022-038-01
46	27K	Carbon	10%	½	4022-073-01
47					
48					
49					

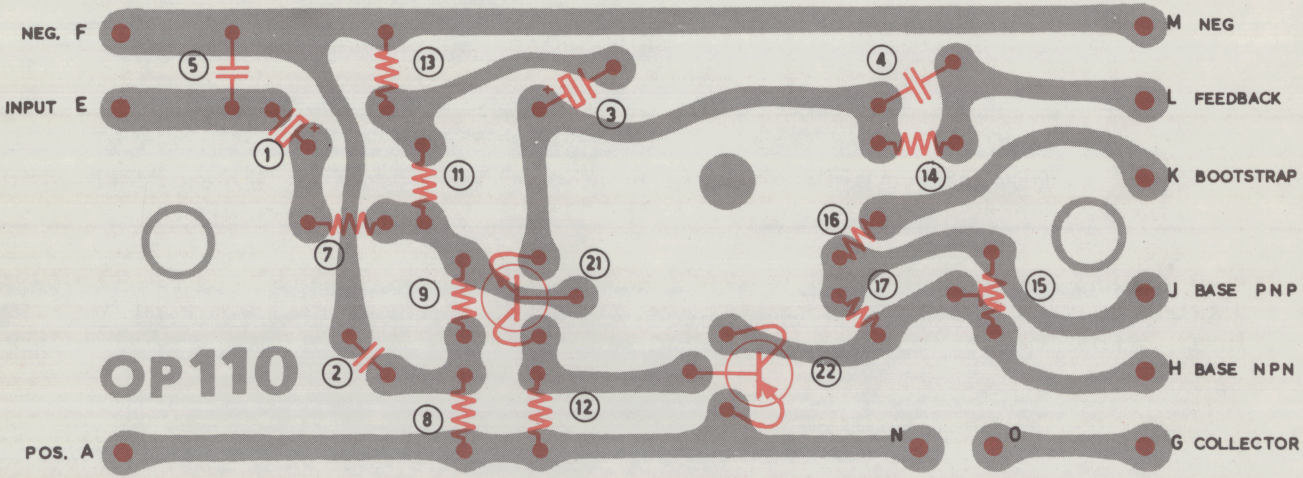

CIRCUIT BOARD DIAGRAM
DRIVER MODULE
PART NO 4067-017-01

AB

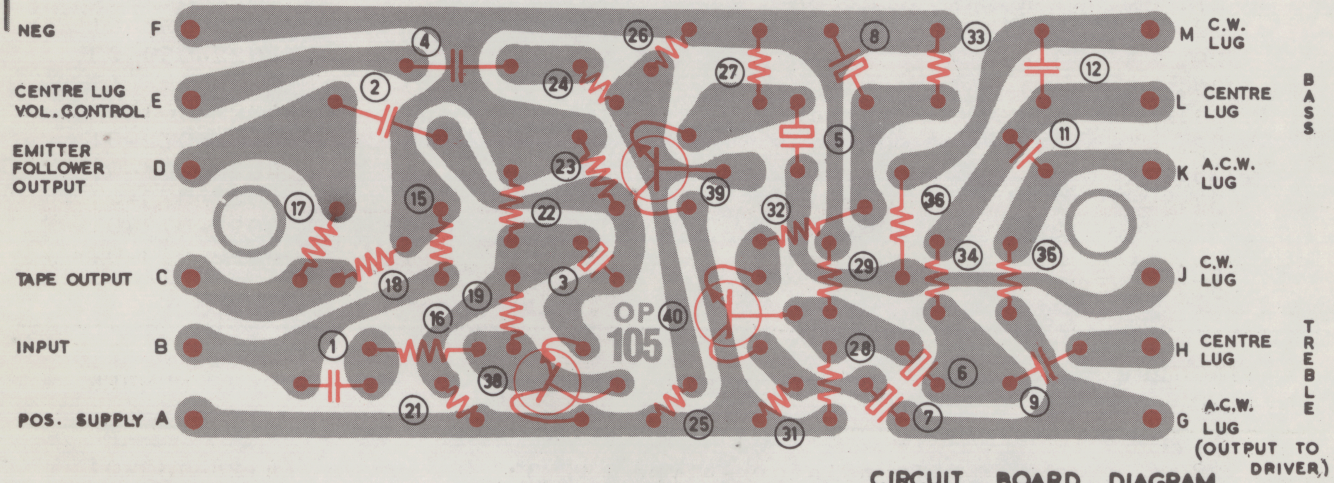

CIRCUIT BOARD DIAGRAM
TONE CONTROL MODULE
PART NO. 4067-016-01

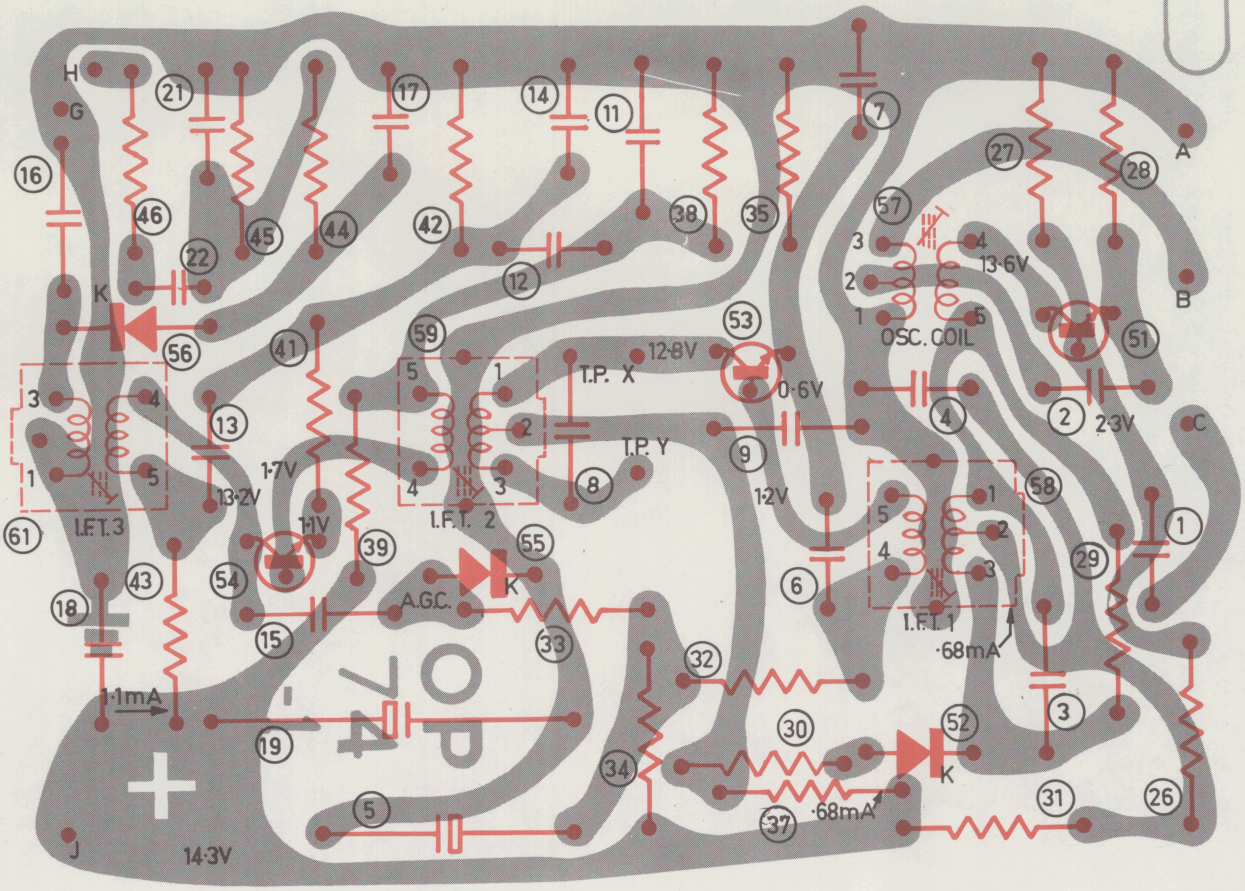
H
G
K
J
A
B
C
I.F.T. 3
I.F.T. 2
I.F.T. 1
OSC. COIL
T.P. X
T.P. Y
A.G.C.
K
K
K
1·1mA
14·3V
1·7V
1·1V
13·2V
12·8V
0·6V
1·2V
13·6V
2·3V
·68mA
·68mA
OP 74

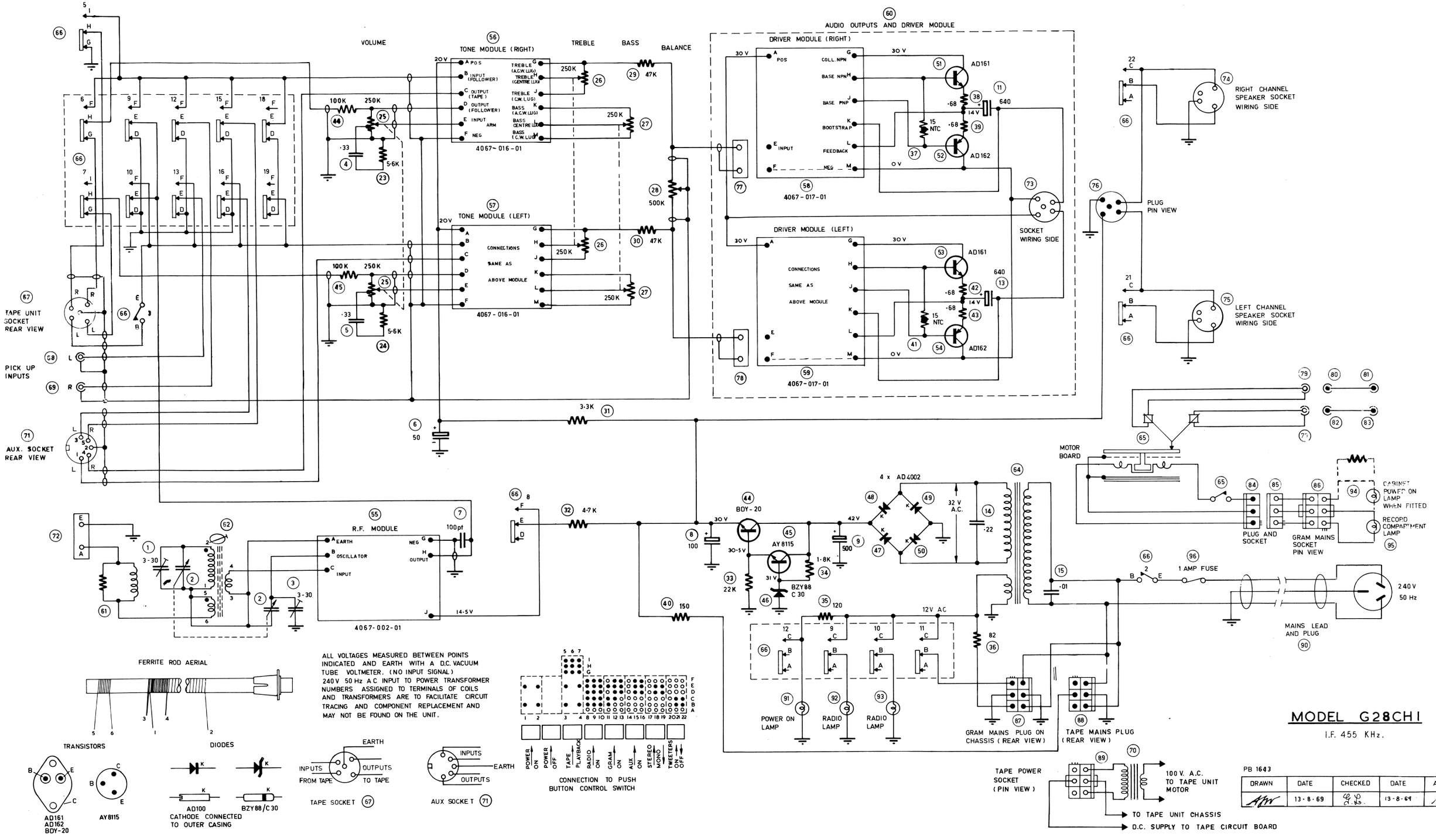

PB 1643				
DRAWN	DATE	CHECKED	DATE	APPROVED
AW	13-8-69		13-8-69	

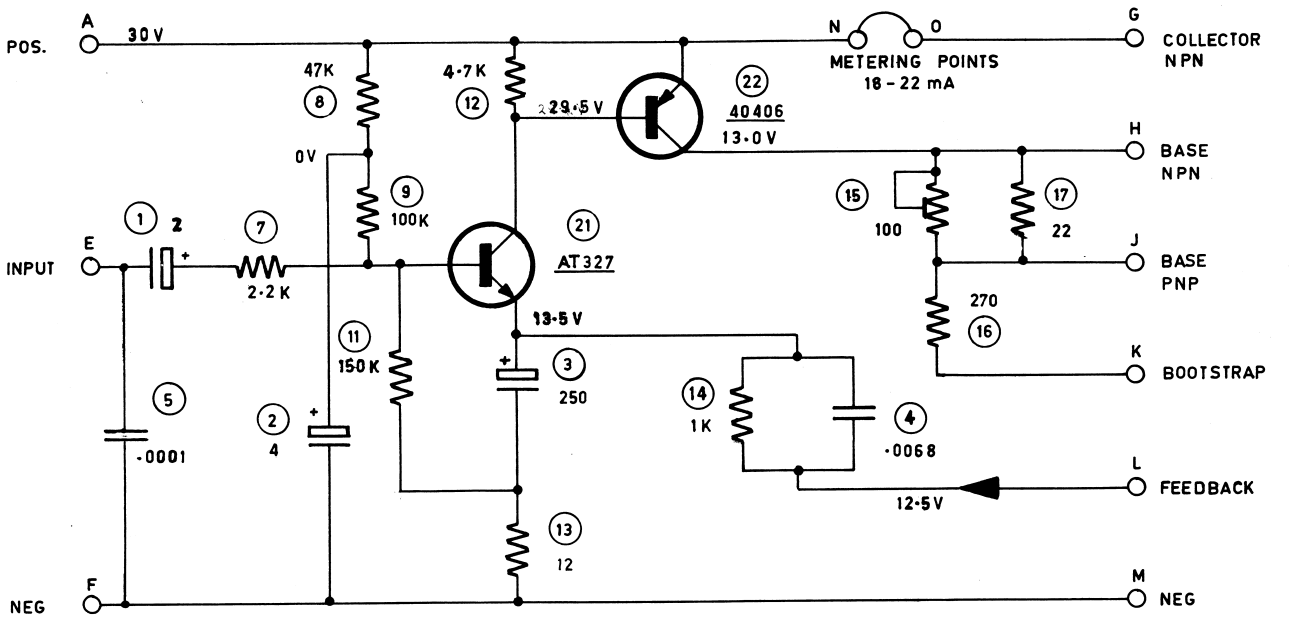

DRIVER MODULE
PART NO. 4067-017-01
CIRCUIT BOARD OP 110

	DRAWN	DATE	CH K D	APP D	DATE
PB 1602	AJW	16·12·68	G.L.		29-4-69

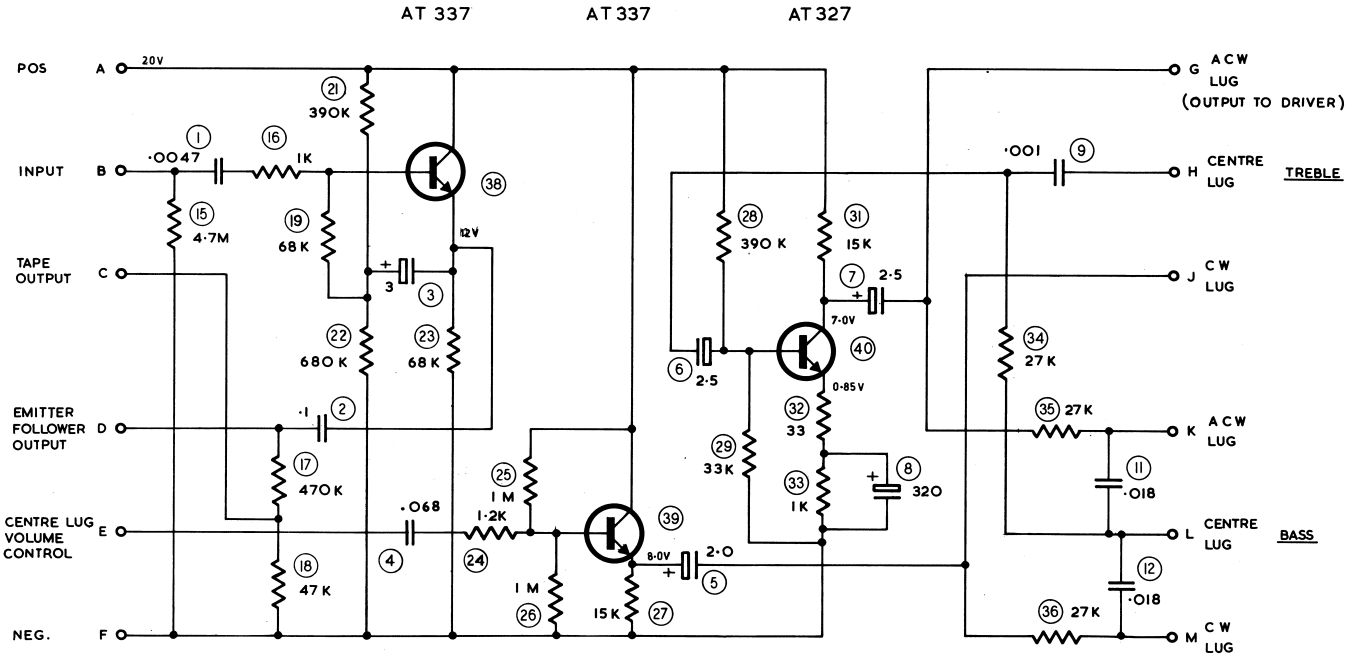

TRANSISTORS AT327 & AT337

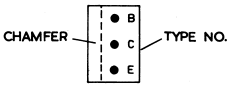

UNDERSIDE VIEW

TONE CONTROL MODULE

PART NO. 4067-016-01

CIRCUIT BOARD IDENT OP 105

DRAWN	DATE	CHECKED	APP'D	DATE
AJW.	17·6·68	G.L.		29-4-69

PB1603

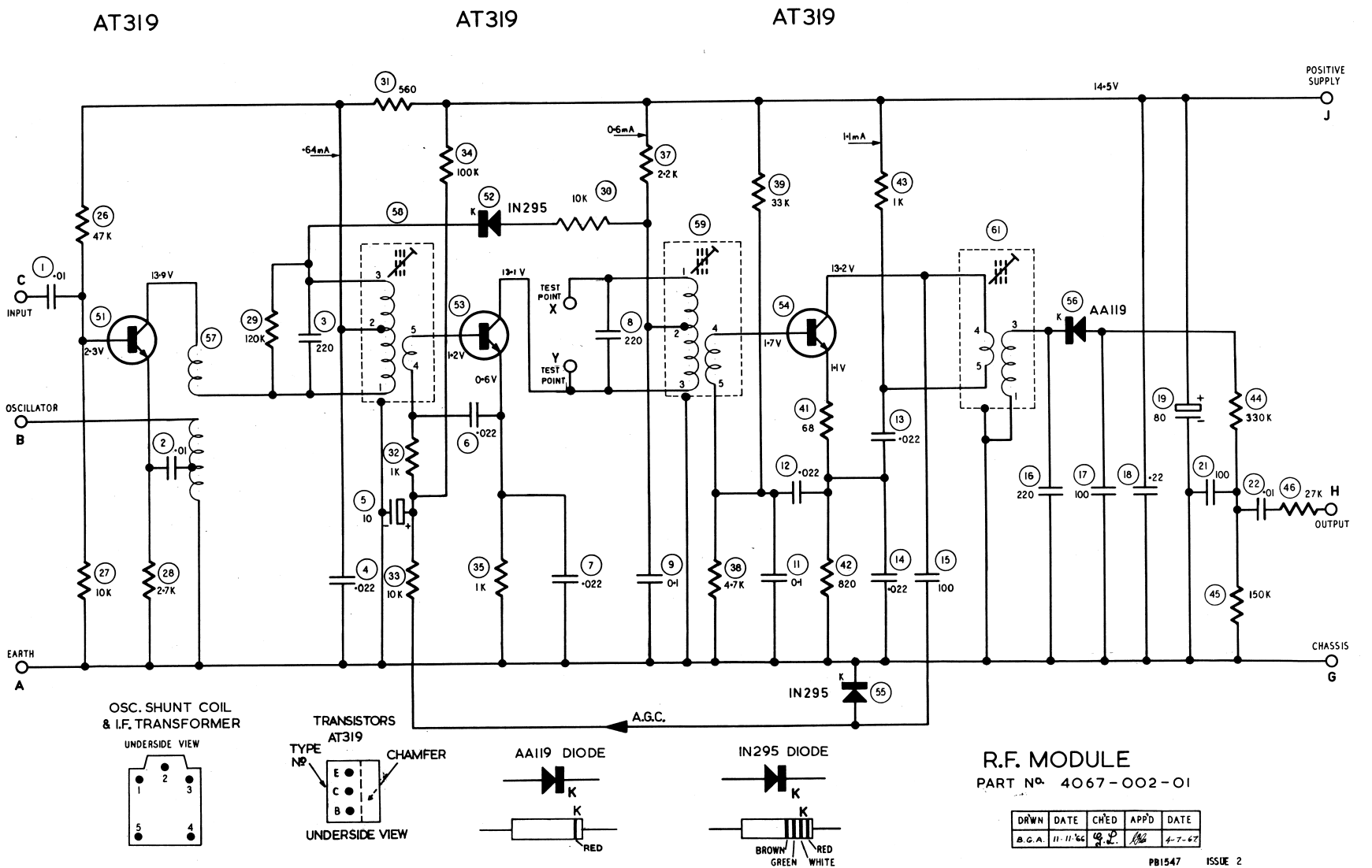
AT319
AT319
AT319
POSITIVE SUPPLY
J
14·5V
31 560
34 100K
37 2·2K
39 33K
43 1K
26 47K
52 IN295
30 10K
58
59
61
C
1 ·01
INPUT
51
13·9V
2·3V
57
29 120K
3 220
53
13·1V
1·2V
0·6V
TEST POINT X
TEST POINT Y
8 220
54
13·2V
1·7V
1·4V
56 AA119
OSCILLATOR
B
2 ·01
32 1K
6 ·022
5 10
41 68
12 ·022
13 ·022
19 80
44 330K
16 220
17 100
18 ·22
21 100
22 ·01
46 27K
H
OUTPUT
27 10K
28 2·7K
4 ·022
33 10K
35 1K
7 ·022
9 0·1
38 4·7K
11 0·1
42 820
14 ·022
15 100
45 150K
EARTH
A
CHASSIS
G
IN295
55
A.G.C.
·64mA
0·6mA
1·1mA
OSC. SHUNT COIL & I.F. TRANSFORMER
UNDERSIDE VIEW
TRANSISTORS AT319
TYPE Nº
CHAMFER
E
C
B
UNDERSIDE VIEW
AA119 DIODE
K
RED
IN295 DIODE
K
BROWN
GREEN
RED
WHITE
R.F. MODULE
PART Nº 4067-002-01
DRWN DATE CH'ED APP'D DATE
B.G.A. 11·11·66 4-7-67
PB1547 ISSUE 2

ASTOR

ASTOR ELECTRONICS PTY. LTD.

DIVISION OF ELECTRONIC INDUSTRIES LTD., BOX 183, P.O. SOUTH MELBOURNE

Reg. Office: Astor House, 161-173 Sturt St., South Melbourne.

SERVICE DATA

ASTOR MODEL 'GB021'

A 19 TRANSISTOR BROADCAST BAND RECEIVER,

THREE UNIT RADIO-STEREOGRAM AND STEREO TAPE UNIT

featuring

A FOUR SPEED STEREO RECORD CHANGER AND

A STEREO CASSETTE TAPE RECORDER.

E.I.L. MODEL STD-1 STEREO CASSETTE TAPE RECORDER, PART NO. 4064-006-01. REFER ATTACHED SERVICE DATA SHEET.

This receiver is fitted with a 'G28CH1' chassis which incorporates the following modules :

1	RF Module	Part No. 4067-002-01
2	Tone Modules	Part No. 4067-016-01
2	Driver Modules	Part No. 4067-017-01
1	Output Module includes the two Driver Modules and Output Stages.	Part No. 7392-022-01

Tuning Range	525-1610 KHz
Intermediate Frequency	455 KHz
Power Output	10 Watts each Channel
Power Source	220-250 Volts, 50 Hz.
Power Consumption	24 Watts - Radio
	18 Watts - Gram Motor
	21 Watts - Tape Motor

CAUTION

Disconnect receiver power lead plug from mains socket before making adjustments inside the cabinet.

Information contained herein must not be reproduced without prior written permission from Astor Electronics Pty. Ltd.