ASTOR

RADIO CORPORATION PTY. LTD.

1090-1140 Centre Road, Clayton

SERVICE DATA

CHASSIS "G17CH1"

15 TRANSISTOR BROADCAST BAND RECEIVER

7135-588-01, Issue 2

FACILITIES ARE PROVIDED FOR THE CONNECTION OF A STEREO PICK-UP, TAPE RECORDER, GUITAR OR THE AUDIO SIGNAL FROM A T.V. RECEIVER

A.C. MAINS SOCKETS ON THE CHASSIS ARE PROVIDED FOR THE CONNECTION OF THE RECORD CHANGER MOTOR AND THE T.V. RECEIVER

Tuning Range	525 - 1610 KHz
Intermediate Frequency	455 KHz
Power Output	4 Watts each channel
Power Source	240 Volts 50 Hz
Power Consumption	35 Watts

The main chassis of this receiver incorporates several circuit sections which are constructed as replaceable modular units.

One - RF Module - Part No. 4067-002-01

Two - Tone Control Modules - Part No. 4067-003-01

Two - Driver Modules - Part No. 4067-001-01

CAUTION:

DISCONNECT RECEIVER POWER LEAD PLUG FROM MAINS SOCKET BEFORE MAKING ADJUSTMENTS INSIDE THE CABINET.

CHASSIS SERIAL NUMBER

The number is stamped into the rear wall of the chassis.

INFORMATION CONTAINED HEREIN MUST NOT BE REPRODUCED WITHOUT PRIOR WRITTEN PERMISSION FROM RADIO CORPORATION PTY. LTD.

Circuit No.	Miscellaneous	Part Number
50		
51	Transistor - type AT319 - Mixer/osc.	4128-118-01
52	Diode- type 1N295 - overload	4127-001-01
53	Transistor - type AT319 - I.F.Amp.	4128-118-01
54	Transistor - type AT319 - I.F.Amp.	4128-118-01
55	Diode - type 1N295 - A.G.C.	4127-001-01
56	Diode - type AA119 - Detector	4127-037-01
57	Osc. Coil	4043-064-01
58	No.1 I.F. Transformer, orange/green,455 Kc/s	4044-031-01
59	No.2 I.F. Transformer, orange/blue, 455 Kc/s	4044-031-02
60		
61	No.3 I.F. Transformer, orange/violet, 455 Kc/s	4044-031-03

Mechanical

Part Number	Description
7167-058-01	Pin (6) Circuit Board Terminations
7120-026-01	Insulator (12) glass, transistor mount

R.F. MODULE. Part No. 4067-002-01

Circuit No.	Value	Capacitors Description	Tol ±	Rating V.DCW	Part Number
1	.01uF	Disc Ceramic		25	4008-039-06
2	.01uF	Disc Ceramic		25	4008-039-06
3	220pF	Polystyrene	5%	100	4004-005-03
4	.022uF	Disc Ceramic		25	4008-010-05
5	10uF	Electrolytic		6	4005-007-12
6	.022uF	Disc Ceramic		25	4008-010-05
7	.022uF	Disc Ceramic		25	4008-010-05
8	220pF	Polystyrene	5%	100	4004-005-03
9	.1uF	Disc Ceramic		25	4008-004-04
10					
11	.1uF	Disc Ceramic		25	4008-004-04
12	.022uF	Disc Ceramic		25	4008-010-05
13	.022uF	Disc Ceramic		25	4008-010-05
14	.022uF	Disc Ceramic		25	4008-010-05
15	100pF	Ceramic	5%	500	4008-006-11
16	220pF	Polystyrene	5%	100	4004-005-03
17	100pF	Ceramic	5%	500	4008-006-11
18	.22uF	Disc Ceramic		25	4008-053-01
19	80uF	Electrolytic		25	4005-030-03
20					
21	100pF	Ceramic		25	4008-006-11
22	.01uF	Disc Ceramic		25	4008-039-06
23					
24					

Circuit No.	Value Ohms	Resistors Description	Tol ±	Rating Watts	Part Number
25					
26	47K	Carbon	10%	½	4022-051-03
27	10K	Carbon	10%	½	4022-004-01
28	2.7K	Carbon	10%	½	4022-043-01
29	120K	Carbon	10%	½	4022-031-01
30	10K	Carbon	10%	½	4022-004-01
31	560	Carbon	10%	½	4022-010-01
32	1K	Carbon	10%	½	4022-008-01
33	10K	Carbon	10%	½	4022-004-01
34	100K	Carbon	10%	½	4022-013-02
35	1K	Carbon	10%	½	4022-008-01
36					
37	2.2K	Carbon	10%	½	4022-021-02
38	4.7K	Carbon	10%	½	4022-005-01
39	33K	Carbon	10%	½	4022-059-03
40					
41	68	Carbon	10%	½	4022-024-01
42	820	Carbon	10%	½	4022-009-01
43	1K	Carbon	10%	½	4022-008-01
44	330K	Carbon	10%	½	4022-047-01
45	150K	Carbon	10%	½	4022-038-01
46	27K	Carbon	10%	½	4022-073-01
47					
48					
49					

ALIGNMENT EQUIPMENT

Signal Generator	-	Modulated 400Hz
Output Meter	-	8 ohms impedance
Generator Series Capacitor	-	.1uF Part No. 4009-008-20
Alignment Tools		

(a) Flat metal blade end - Part No. 4121-001-01 for I.F.T. and Osc. coil iron core adjustment.

(b) Hexagonal socket type - Part No. 4121-028-02 for trimmer capacitor adjustment.

ALIGNMENT CONDITIONS

Volume Control	-	Maximum, clockwise
Bass Control	-	Maximum, clockwise
Treble Control	-	Maximum, clockwise
Balance Control	-	Clockwise position
Function Switch	-	"Radio" position, button "in"
Output Level	-	50 milliWatts
Output Meter connection	-	To right channel speaker socket (speaker disconnected)
Supply Voltage	-	240 Volt 50Hz.

INTERMEDIATE FREQUENCY TRANSFORMER ALIGNMENT

Set tuning control to high frequency end of travel.
Insert .1uF capacitor in series with generator "hot" lead.

Oper. No.	Generator Connection	Generator Frequency	Instructions
1	To pin "C" on "RF" circuit board (term 3 of rod aerial)	455KHz	Adjust iron core of 3rd IF trans. for max.output
2	As oper. 1	455KHz	Adjust iron core of 2nd IF trans. for max.output
3	As oper. 1	455KHz	Adjust iron core of 1st IF trans. for max.output

SETTING THE DIAL POINTER

Turn tuning spindle until tuning capacitor plates are fully in mesh.

Slide pointer along cord until the pointer aligns with the end of travel spot on dial reading.

BROADCAST ALIGNMENT

A. To inject a signal into the receiver, connect 2ft. of aerial wire to the "hot" terminal of signal generator. Fashion wire into a vertical position.

B. Place receiver so that ferrite aerial is uppermost and horizontal.

Tuning end of receiver is to be toward but not less than one foot from generator aerial wire.

93	Mains lead and plug assembly	4077-120-04
94	Socket assembly - pick-up outlet - gram unit	7222-140-02
95	Plug (4) pick-up interconnecting leads	7171-110-01
96	Lamp - power 'ON' - cabinet mounted when fitted	4068-003-06
97	Lamp - record compartment	4068-003-06
98	Lead - guitar adaptor	4078-028-01
	includes :	
	Plug	7171-110-01
	Socket	7222-096-01
	Lead - 18"	1171-030-08
99	Plug - 2 pin Driver modules	7171-121-01
100	Plug - 2 pin Driver modules	7171-121-01

MECHANICAL

Part Number	Description
7166-011-01	Pillar (2) rod aerial mount
7055-461-01	Clip (2) rod aerial mount
7279-005-02	Nut plate (2) rod aerial mount pillar
7222-115-01	Socket (3) dial lamps
7055-291-51	Clip (3) dial lamp sockets
7106-032-01	Grommet (4) gang mount
7031-017-01	Bush (4) gang mount
7196-067-03	Screw (4) 5/16" x 4BA C/sk. Hd. Gang Mount
7077-034-01	Dial drum
7198-801-02	Grub screw (2) 3/16" x 1/8" Whit. - dial drum
7225-129-01	Spring - dial cord
1107-002-02	Dial cord 78" required
7174-015-01	Pulley (3) dial cord
7055-250-01	Clip (3) dial cord pulley
7224-007-04	Tuning spindle assembly
	consists of :
7224-008-08	Spindle
7174-009-01	Pulley
7031-025-01	Bush
7261-028-01	Washer 'C'
7173-068-01	Dial pointer
7262-024-01	Washer (5) 3/8" Int. S/P. - controls
7150-858-01	Nut (5) 3/8" U.N.F. - controls
7196-275-13	Screw (3) 3/16" x 6BA Ch. Hd. - Switch
7028-664-01	Clip (2) dial
7293-037-01	Spacer (2) "Din" socket
7294-110-01	Spacer (8) modules
7120-201-11	Insulator (4) modules
7215-100-01	Shield top (2) modules
7120-205-01	Insulator (2) Shield top
7215-101-01	Shield base (2) modules
7215-103-01	Shield - mains leads to switch
7215-102-02	Shield - switch
7215-098-01	Shield - controls
7120-199-01	Mica insulator (4) - (supplied with
7120-200-01	Bush insulator (4) - (output transistors
7120-029-02	Grommet (3) leads
7169-558-01	Fuse holder
7065-206-01	Cover - fuse holder
7345-006-05	Anchor - mains cord
7231-203-01	Terminal strip (1) 5 lug
7060-073-11	Contact (16) Gram and T.V. power plugs
7055-539-01	Clip (4) lead anchor
7222-152-01	Socket - 5 pin - heat sink
7171-120-01	Plug - 5 pin - heat sink

AUDIO AMPLIFIER GAIN AND BALANCE TEST CONTINUED

Disconnect pick-up leads from input sockets.
Connect audio generator output leads to an input socket.
Connect an 8 Ohm speaker to one output socket and the output meter to the other output socket.
Set the output of audio generator to 16 milliVolts.
With equipment connected as above, the output meter should read a minimum of 50 milliWatts.
Exchange output meter and speaker connections to opposite channels.
Turn balance control to anticlockwise position.
Difference in output between the two readings must not exceed 2dB.

SPEAKER PHASING

It is essential that the speakers be phased correctly.

If a speaker has to be removed for service, note the lead connections to ensure correct phasing when reconnecting.

A method used for checking the phasing of the speakers is detailed in the following paragraphs.

1. Play a monophonic record.

2. To conduct the following test, the listener should be located at a position four feet away in front of the centre of the cabinet.

3. If the phasing is correct, the reproduced sound will appear to be radiated from a point near the centre of cabinet front.

4. With incorrect phasing, the quality of reproduction will be poor, it will appear to be lacking in bass response and will appear to be radiated from both ends of the cabinet.

5. If the speakers are incorrectly phased, reverse the leads connected to the voice coil terminals of one of the large speakers then repeat the test detailed above.

NOTE: that the terminal colours on each "small" speaker correspond with the adjacent large speaker connections.

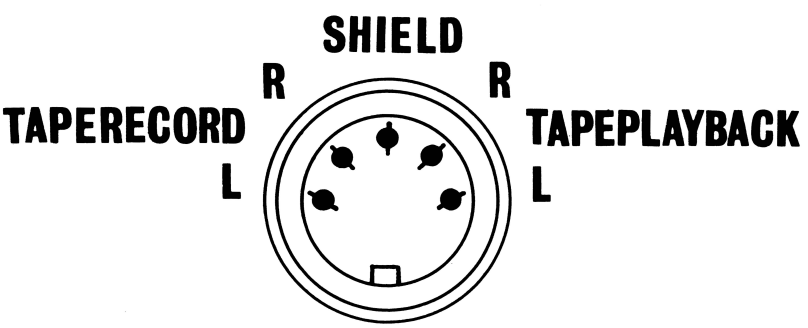

TAPERECORDER CONNECTIONS
AS VIEWED LOOKING DOWN ONTO SOCKET.

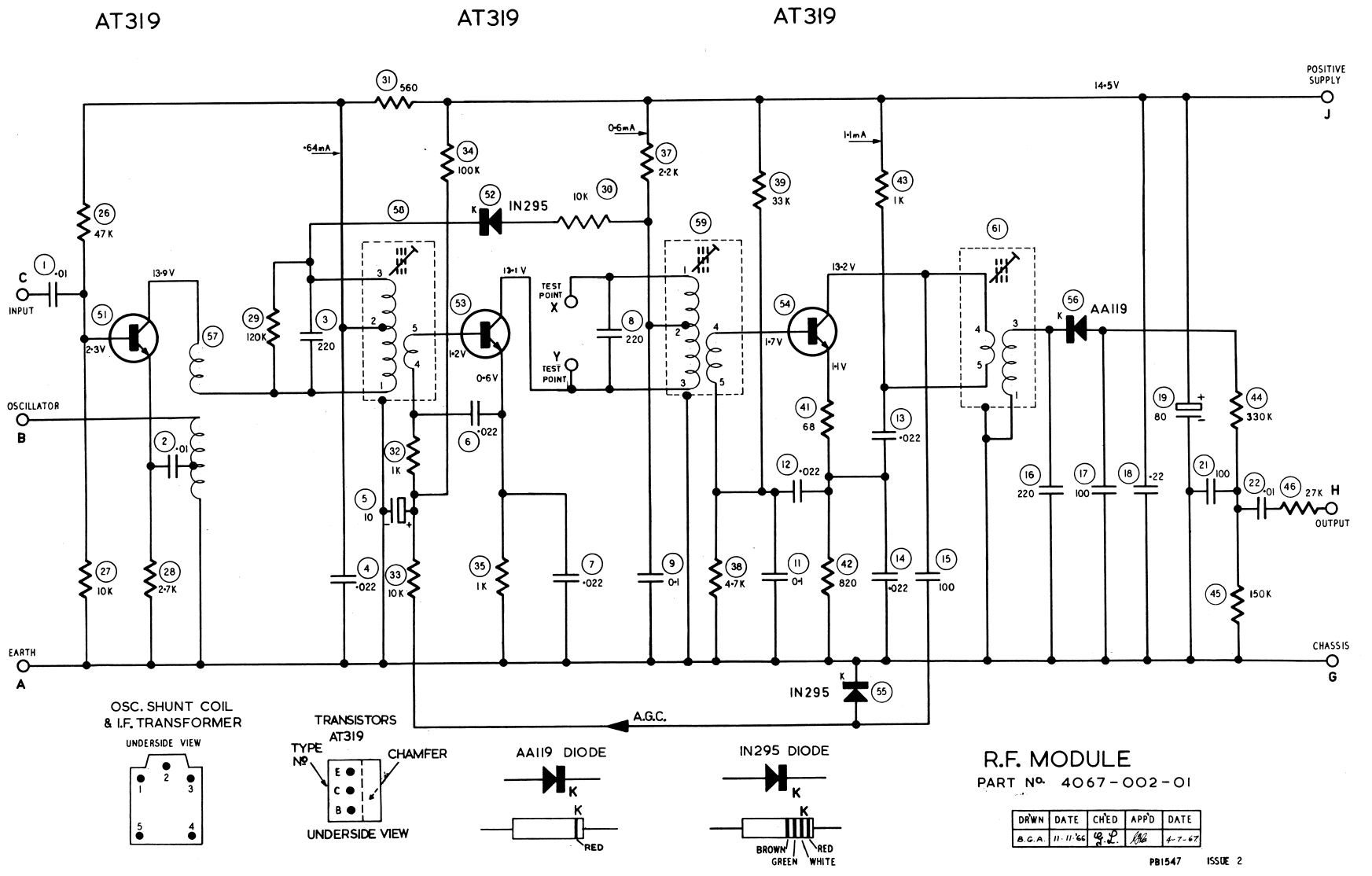
AT319
AT319
AT319
POSITIVE SUPPLY
J
14·5V
31 560
34 100K
37 2·2K
0·6mA
·64mA
1·1mA
26 47K
52 IN295
30 10K
58
59
61
39 33K
43 1K
C
1 ·01
INPUT
51
13·9V
2·3V
57
29 120K
3 220
53
13·1V
1·2V
0·6V
TEST POINT X
Y TEST POINT
8 220
54
13·2V
1·7V
1·1V
56 AA119
OSCILLATOR
B
2 ·01
32 1K
6 ·022
5 10
41 68
12 ·022
13 ·022
19 80
44 330K
16 220
17 100
18 ·22
21 100
22 ·01
46 27K
H
OUTPUT
27 10K
28 2·7K
4 ·022
33 10K
35 1K
7 ·022
9 ·01
38 4·7K
11 ·01
42 820
14 ·022
15 100
45 150K
EARTH
A
CHASSIS
G
IN295
55
A.G.C.
OSC. SHUNT COIL & I.F. TRANSFORMER
UNDERSIDE VIEW
TRANSISTORS AT319
TYPE Nº
CHAMFER
E
C
B
UNDERSIDE VIEW
AA119 DIODE
K
RED
IN295 DIODE
BROWN
GREEN
RED
WHITE
R.F. MODULE
PART Nº 4067-002-01
DRWN DATE CH'ED APP'D DATE
B.G.A. 11·11·66 4-7-67
PB1547 ISSUE 2

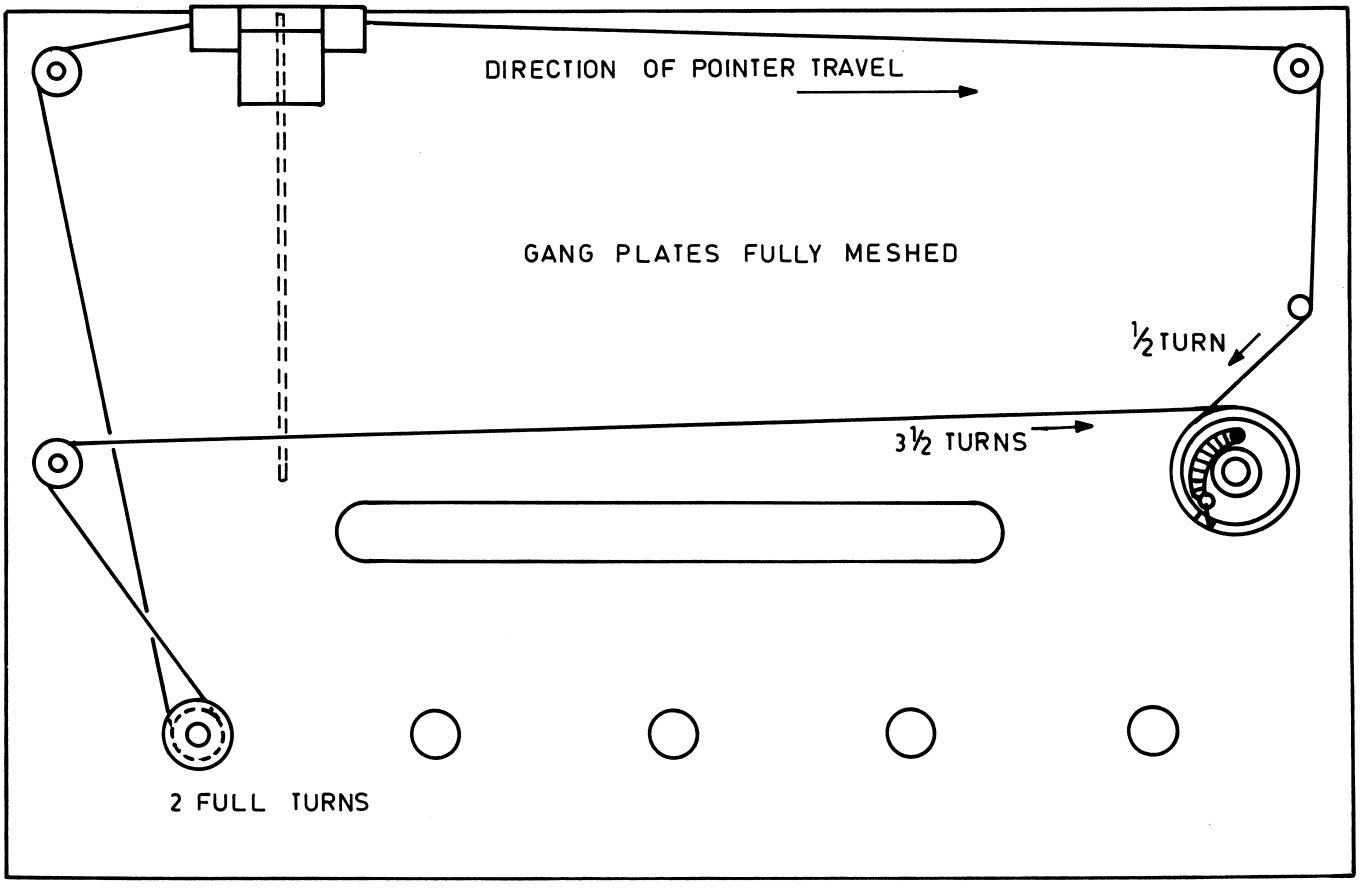

DIAL CORDING DIAGRAM

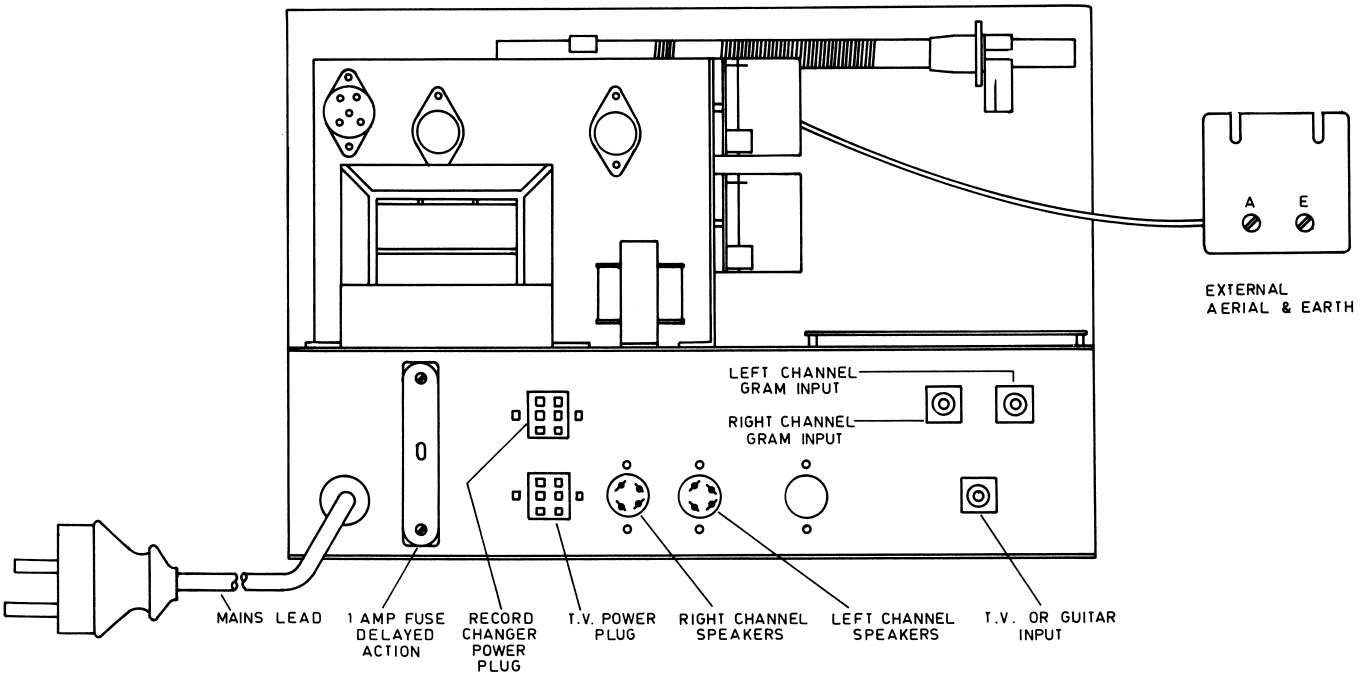

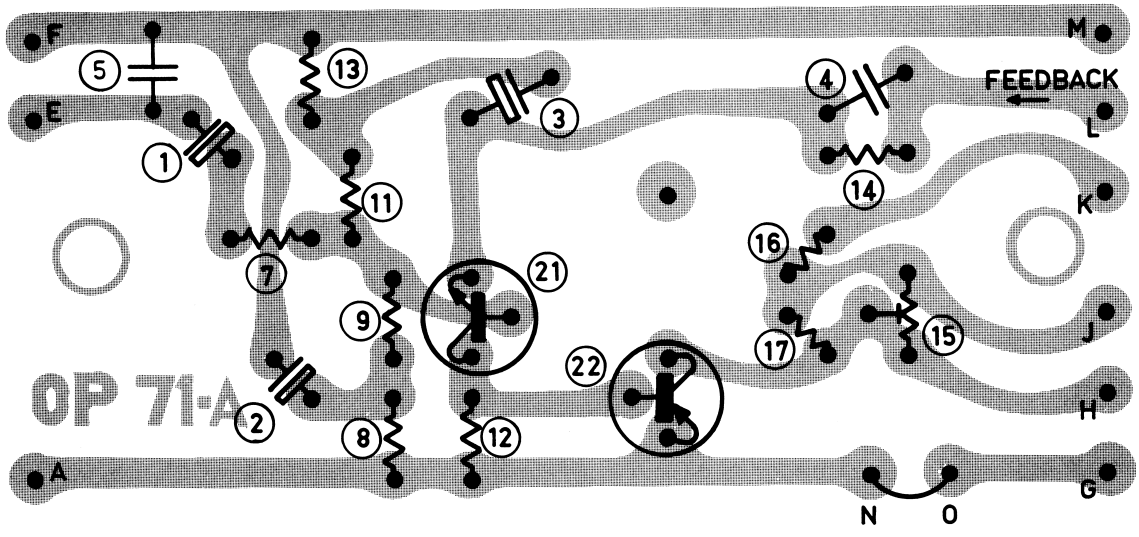

DR'WN.	DATE	CH'ED.	APP'D.	DATE
K.J.D.	12.4.67.	G.L.	V.M.	15-5-67

ISSUE 2 CIRCUIT NO 5 ADDED PB1535

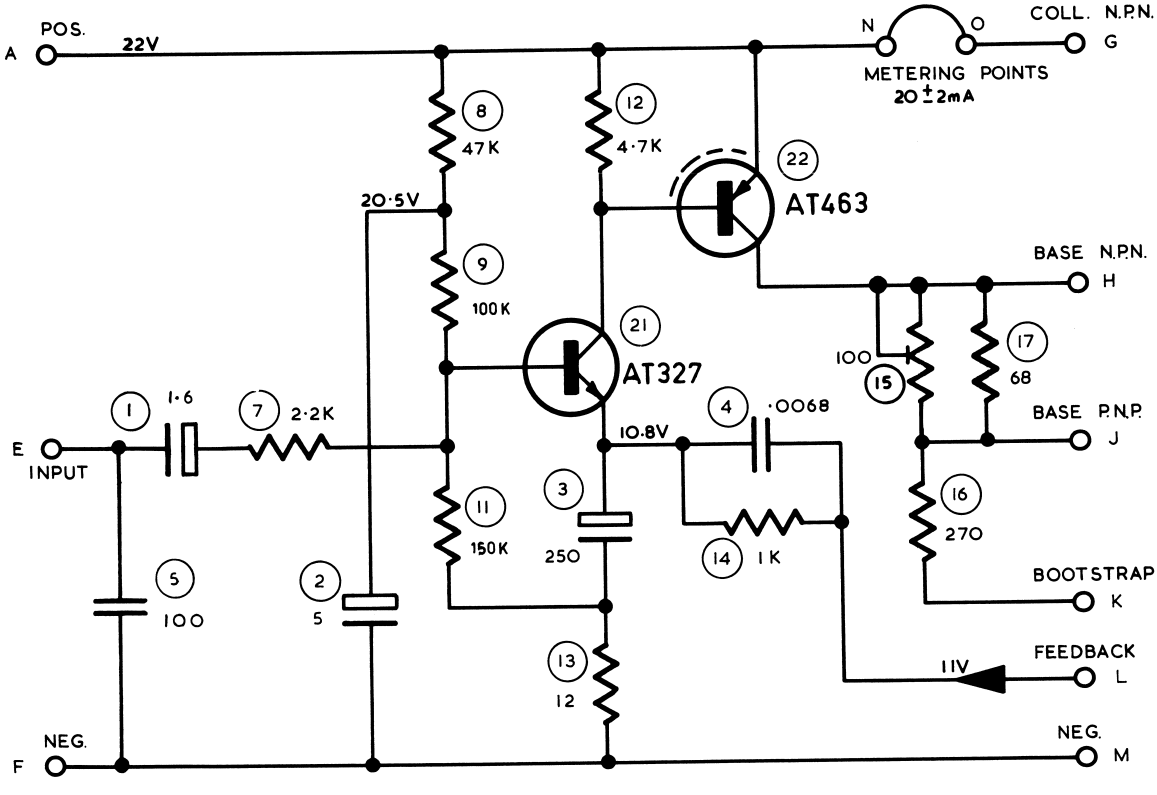

AT327 TRANSISTOR

AT463 TRANSISTOR

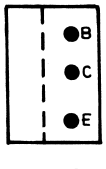

UNDERSIDE VIEW

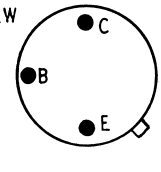

DRIVER MODULE

PART No. 4067-001-01

DR'WN	DATE	CH'ED	APP'D
G. B.	11·11·'66	G.L.	A.G.

ISSUE 2 (1) WAS 5 uF. (5) 100pF ADDED

ISSUE 3 (9) WAS 390K (11) WAS 470K (21) WAS SE4002 (22) WAS AX6123

PB1534

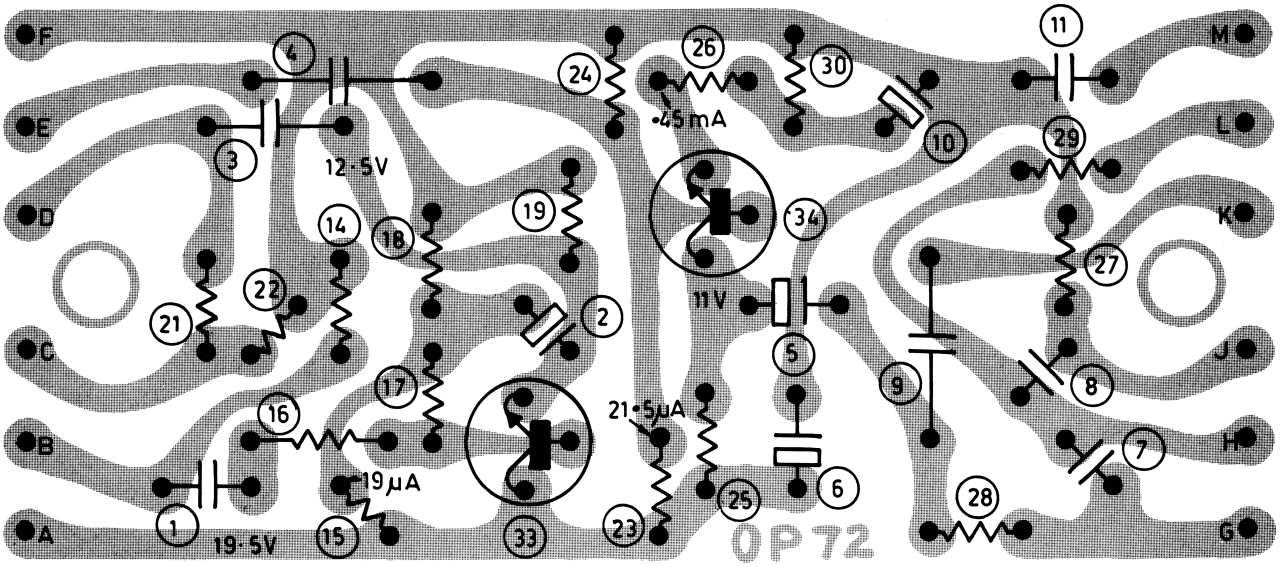

DRAWN	DATE	CH KD	APP D
A.O	21-8-70	G. L.	D.M.

PB1533

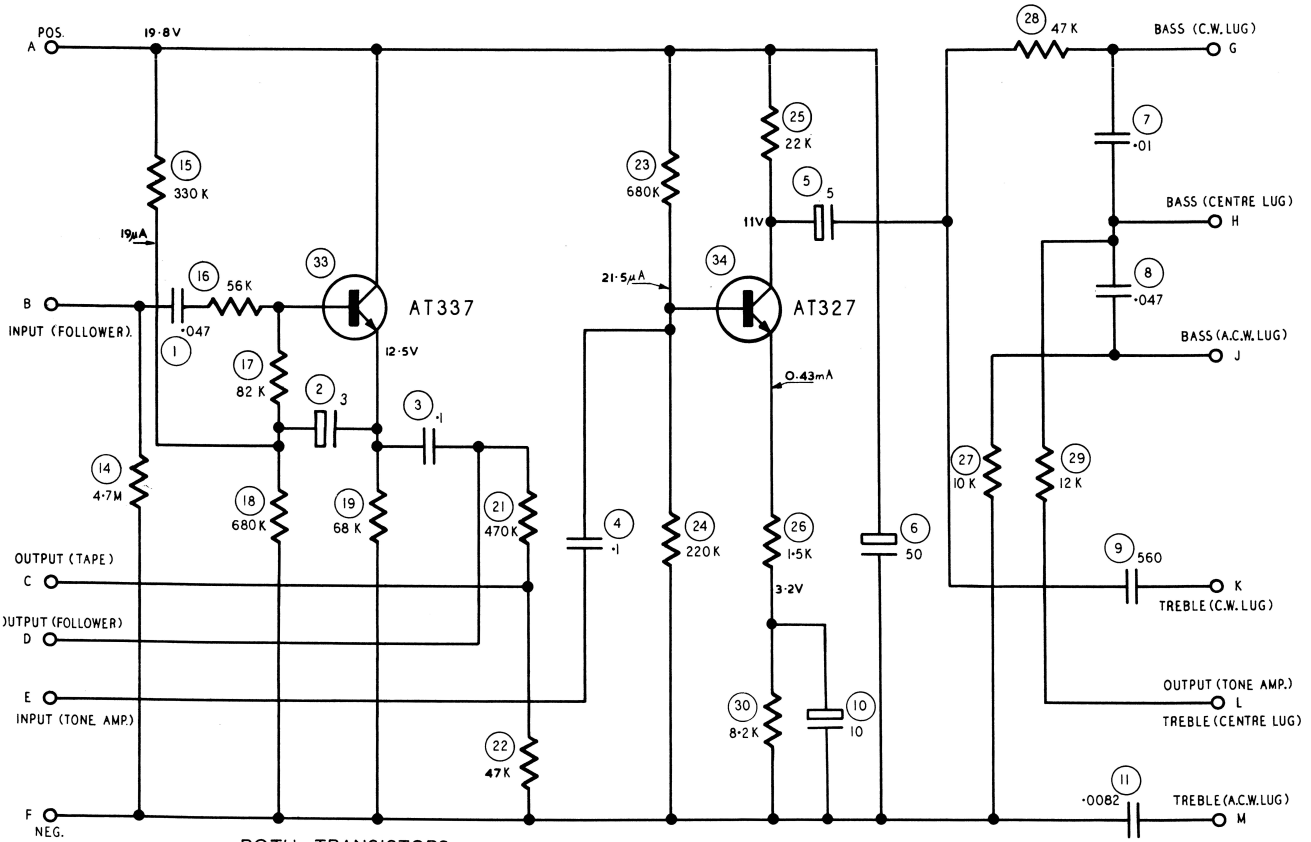

BOTH TRANSISTORS
UNDERSIDE VIEW

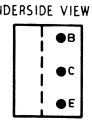

TONE CONTROL MODULE

PART No. 4067-003-01

DR'WN	DATE	CH'ED	APP'D	DATE
B.G.A	10·11·66	G.L.	D.M.	17-7-69.

ISSUE 2 (33) WAS BC109 (34) WAS BC108

PB1532

CAPACITORS

Circuit No.	Value	Description	Tol ±	Rating V.DCW.	Part Number
1	5-50pF	Trimmer - air			4000-012-02
2		Two gang tuning			4000-042-01
3	3-30pF	Trimmer - W.W.			4000-025-01
4	.33uF	Polyester	10%	160	4009-005-14
5	.33uF	Polyester	10%	160	4009-005-14
6	.27uF	Disc Ceramic		25	4008-055-01
7	1000uF	Electrolytic		40	4005-025-08
8	1000uF	Electrolytic		40	4005-025-08
9	640uF	Electrolytic		25	4005-046-02
10	640uF	Electrolytic		25	4005-046-02
11	.22uF	Polyester	10%	160	4009-007-14
12	1uF	Paper	20%	200	4007-023-01
13	1uF	Paper	20%	200	4007-023-01
14	.01uF	Polyester	10%	630	4009-014-19
15	.001uF	Polyester	10%	400	4009-010-07
16	.001uF	Polyester	10%	400	4009-010-07
17	.1uF	Polyester	10%	160	4009-008-20
18	.1uF	Polyester	10%	160	4009-008-20
19	.1uF	Ceramic Disc	20%	25	4008-004-06
20	.1uF	Ceramic Disc	20%	25	4008-004-06

RESISTORS

Circuit No.	Value Ohms	Description	Tol ±	Rating Watts	Part Number
21	5.6K	Carbon	10%	1/2	4022-022-02
22	5.6K	Carbon	10%	1/2	4022-022-02
23	250K	Volume Control - tapped at 25K ohms			4034-012-01
24	250K	Bass Control			4034-010-01
25	250K	Treble Control			4034-010-01
26	47K	Carbon	10%	1/2	4022-051-03
27	47K	Carbon	10%	1/2	4022-051-03
28	2.7K	Carbon	10%	1/2	4022-043-01
29	500K	Balance Control			4032-021-06
30	3.9K	Carbon	10%	1/2	4022-020-01
31	120	Carbon	10%	1/2	4022-039-01
32	15	Disc NTC			4021-075-01
33	15	Disc NTC			4021-075-01
34	.68	Wirewound	10%	1/2	4024-059-01
35	.68	Wirewound	10%	1/2	4024-059-01
36	.68	Wirewound	10%	1/2	4024-059-01
37	.68	Wirewound	10%	1/2	4024-059-01
38					
39					
40	82	Carbon	10%	1/2	4022-070-01

Oper. No.	Generator Connection	Generator Frequency	Instructions
1.	Refer Para. A & B	525KHz	Tuning capacitor plates fully meshed against end of travel stop. Adjust oscillator coil iron core and rod aerial adjusting ring for maximum output.
2.	As per oper. 1	1610KHz	Set tuning pointer to 1610KHz spot on dial. Adjust oscillator and aerial trimmer capacitors for maximum output.
3.	As oper. 1	600KHz	Tune receiver to generator signal and adjust rod aerial adjusting ring for maximum output.
4.	As oper. 1	1400KHz	Tune receiver to generator signal and adjust aerial trimmer capacitor for maximum output.

ADJUSTMENT OF COLLECTOR CURRENT

This should be performed after a driver module or output transistors or associated componentry have been replaced.

EQUIPMENT Current Meter - 0-50mA D.C. terminated with lead and socket assembly Part No.4078-018-01, positive terminal to red sleeve.

CONDITIONS Volume Control set at minimum. No input signal. Connect an 8 Ohm impedance speaker to receiver socket. Remove link from pins "O" and "N" on Driver Module board. Place meter lead socket on to test pins "O" and "N". Connector with red sleeving is to be connected to pin "N".

Adjust 100 ohm potentiometer circuit No. 15 until a meter reading of 20 mA. ± 2 mA. is indicated.

Remove meter lead plug and reconnect link to test pins.

AUDIO AMPLIFIER GAIN AND BALANCE TEST

Audio Frequency Generator	-	1000 Hz - 600 Ohms impedance.
Output Meter	-	8 Ohms
Volume Control	-	Maximum, clockwise
Bass Control	-	Maximum, clockwise
Treble Control	-	Maximum, clockwise
Balance Control	-	Clockwise position
Function Switch	-	GRAMO button "in", MONO button "out"

DRIVER MODULE PART NO. 4067-001-01

CAPACITORS

Circuit No.	Value	Description	Tol ±	Rating V.DCW	Part Number
1	2uF	Electrolytic		25	4005-005-12
2	5uF	Electrolytic		25	4005-018-12
3	250uF	Electrolytic		15	4005-011-17
4	.0068uF	Polyester		400	4009-004-08
5	100pF	Disc Ceramic	5%	500	4008-006-11

RESISTORS

Circuit No.	Value Ohms	Description	Tol ±	Rating Watts	Part Number
7	2.2K	Carbon	10%	.5	4022-021-06
8	47K	Carbon	10%	.5	4022-051-03
9	100K	Carbon	5%	.5	4022-013-16
10					
11	150K	Carbon	5%	.5	4022-038-11
12	4.7K	Carbon	10%	.5	4022-005-01
13	12	Carbon	5%	.5	4022-069-09
14	1K	Carbon	5%	.5	4022-008-14
15	100	Potentiometer, Quiescent Current Adj.			4025-031-03
16	270	Carbon	10%	1	4022-071-03
17	68	Carbon	10%	.5	4022-024-01

MISCELLANEOUS

Circuit No.	Description	Part Number
21	Transistor - type AT327 - Audio Amp.	4128-125-01
22	Transistor - type AT463 - Audio Driver	4128-184-01

MECHANICAL

Part Number	Description
7167-058-01	Pin (12) Circuit board terminations
7120-026-01	Insulator (2) glass, transistor mount
7111-053-02	Heat Sink (1) audio driver amp transistor

MISCELLANEOUS

Circuit No.	Description	Part Number
44	R.F. module - refer separate list	4067-002-01
45	Right tone module - refer separate list	4067-003-01
46	Left tone module - refer separate list	4067-003-01
47	Right driver module - refer separate list	4067-001-01
48	Left driver module - refer separate list	4067-001-01
49		
50		
51		
52	Loading Coil	4036-051-01
53	Ferrite rod aerial	4074-064-01
54	Choke - filter	4048-053-01
55	Diode - type AD4002 - bridge rectifier	4127-114-01
56	Diode - type AD4002 - bridge rectifier	4127-114-01
57	Diode - type AD4002 - bridge rectifier	4127-114-01
58	Diode - type AD4002 - bridge rectifier	4127-114-01
59	Transistor - type AD161) Matched pair	4128-109-01
60	Transistor - type AD162)	
61	Transistor - type AD161) Matched pair	4128-109-01
62	Transistor - type AD162)	
63	Power Transformer	4041-054-02
64	Record changer - refer Model Service Data	
65	Speaker - 8" dia. 8 Ohms impedance)Refer	
66	Speaker - 5" dia. 15 or 8 Ohms impedance)Model	
67	Speaker - 8" dia. 8 Ohms impedance)Service	
68	Speaker - 5" dia. 15 or 8 Ohms impedance)Data	
69		
70		
71		
72		
73	Push-button switch - function	4059-192-01
74	Socket - T.V. or guitar input	7222-157-01
75	Socket - pick-up input	7222-157-01
76	Socket - pick-up input	7222-157-01
77	Socket - "Din" tape and auxillary input and output	7222-141-01
78	Terminal board - external aerial and earth requires	
	Plate	7169-426-01
	Terminal (2)	7244-009-01
	Screw (2) special	7198-909-01
79	Lamp - power 'ON' - 12-16 Volt	4068-003-04
80	Lamp - dial - 12-16 Volt	4068-003-04
81	Lamp - dial - 12-16 Volt	4068-003-04
82	Plug - 6 pin - less contacts - gram motor supply	7171-087-01
83	Socket - 4 pin - speakers	7222-052-01
84	Socket - 4 pin - speakers	7222-052-01
85	Plug - 3 pin - less contacts - motor unit	7171-114-01
86	Socket - 3 pin - less contacts - motor unit	7222-144-01
87	Fuse - 1 amp delayed action	4071-014-01
88	Plug - 6 pin - less contacts T.V. mains supply	7171-087-01
89	Socket - 6 pin - less contacts - mains to T.V. chassis	7222-111-01
90	Plug - 4 pin - speakers	7171-024-01
91	Plug - 4 pin - speakers	7171-024-01
92	Socket - 6 pin - less contacts - mains to gram motor	7222-111-01

TONE MODULE PART NO. 4067-003-01

CAPACITORS

Circuit No.	Value	Description	Tol ±	Rating V.DCW	Part Number
1	.047uF	Polyester	10%	160	4009-001-15
2	3uF	Electrolytic		3	4005-034-03
3	.1uF	Polyester	10%	160	4009-008-20
4	.1uF	Polyester	10%	160	4009-008-20
5	5uF	Electrolytic		12	4005-018-13
6	50uF	Electrolytic		25	4005-001-18
7	.01uF	Polyester	10%	160	4009-014-17
8	.047uF	Polyester	10%	160	4009-001-15
9	560pF	Polystyrene	10%	100	4004-026-03
10	10uF	Electrolytic		6	4005-007-13
11	.0082uF	Polyester	10%	400	4009-029-03

RESISTORS

Circuit No.	Value Ohms	Description	Tol ±	Rating Watts	Part Number
14	4.7M	Carbon	10%	.5	4022-061-03
15	330K	Carbon	5%	.5	4022-047-12
16	56K	Carbon	10%	.5	4022-003-04
17	82K	Carbon	10%	.5	4022-037-04
18	680K	Carbon	5%	.5	4022-055-11
19	68K	Carbon	10%	.5	4022-048-03
20					
21	470K	Carbon	10%	.5	4022-045-03
22	47K	Carbon	10%	.5	4022-051-03
23	680K	Carbon	5%	.5	4022-055-11
24	220K	Carbon	5%	.5	4022-063-13
25	22K	Carbon	10%	.5	4022-026-02
26	1.5K	Carbon	10%	.5	4022-007-01
27	10K	Carbon	10%	.5	4022-004-01
28	47K	Carbon	10%	.5	4022-051-03
29	12K	Carbon	10%	.5	4022-029-01
30	8.2K	Carbon	10%	.5	4022-027-02

MISCELLANEOUS

Circuit No.	Description	Part Number
33	Transistor - type AT337 - Emitter Follower	4128-133-01
34	Transistor - type AT327 - Audio Amplifier	4128-125-01

MECHANICAL

Part Number	Description
7167-058-01	Pin (12) Circuit Board Terminations
7120-026-01	Insulator (4) glass, transistor mount

SERVICE DATA SHEET PART NO. 7135-768-10, ISSUE 2.

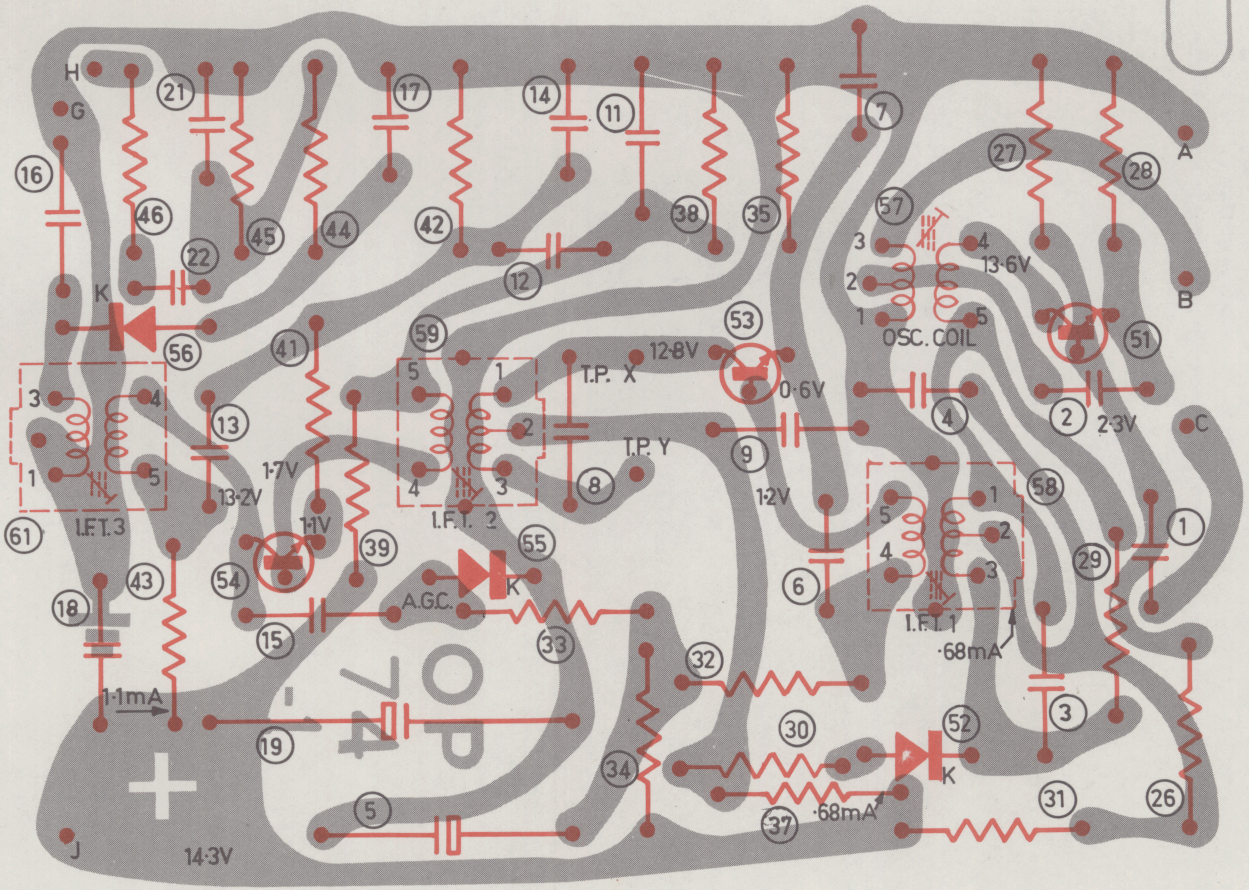
H
G
A
B
C
J
K
I.F.T.3
I.F.T. 2
I.F.T. 1
T.P. X
T.P. Y
12·8V
0·6V
13·6V
OSC. COIL
2·3V
1·2V
1·7V
1·1V
13·2V
A.G.C.
·68mA
1·1mA
14·3V
OP 74

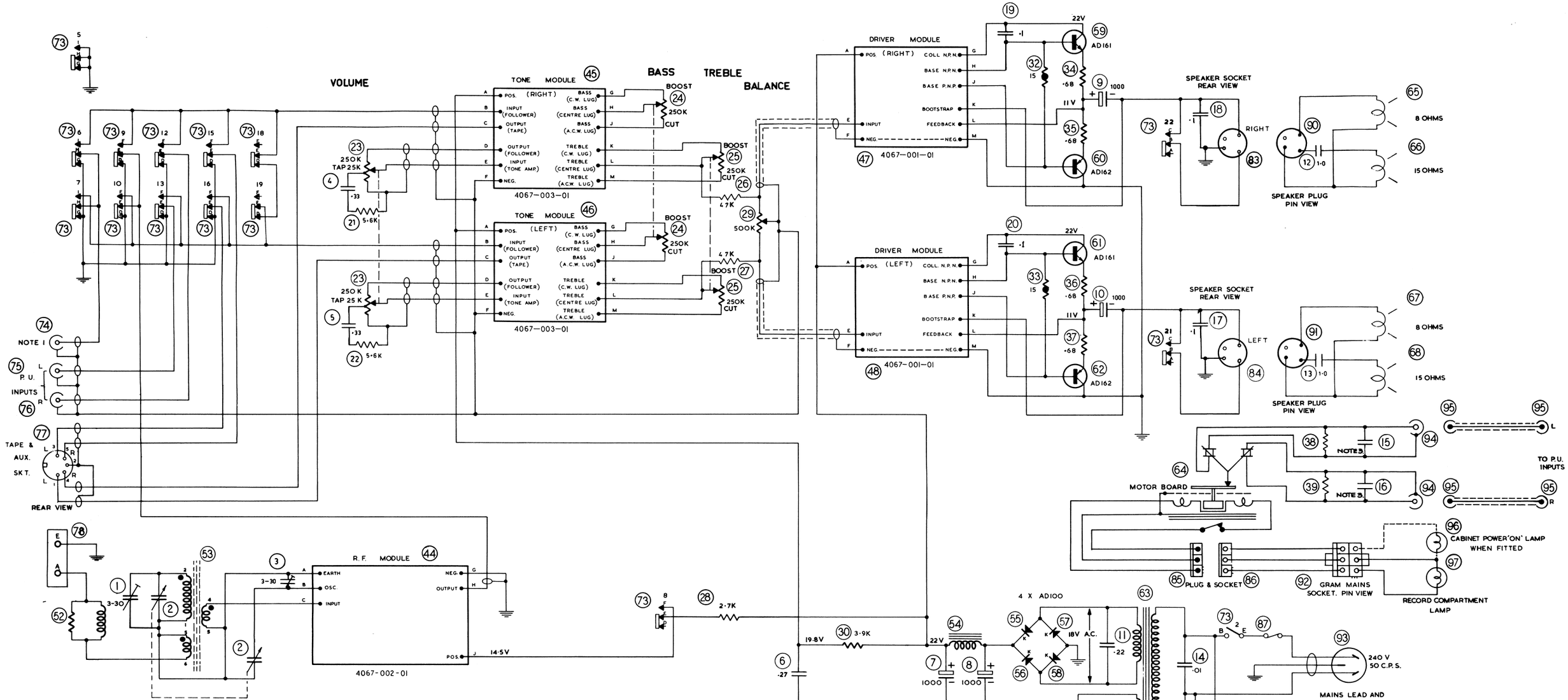

ALL VOLTAGES MEASURED BETWEEN POINTS INDICATED AND EARTH WITH A D.C. VACUUM TUBE VOLTMETER. (NO INPUT SIGNAL)

240V 50C.P.S. A.C. INPUT TO POWER TRANSFORMER.

NUMBERS ASSIGNED TO TERMINALS OF COILS & TRANSFORMERS ARE TO FACILITATE CIRCUIT TRACING AND COMPONENT REPLACEMENT AND MAY NOT BE FOUND ON THE UNIT.

NOTE 1: TV INPUT ON TV GRAMS. GUITAR INPUT ON RADIO GRAMS.

NOTE 2: TV 'ON'–TV GRAMS. GUITAR 'ON'–RADIO GRAMS.

NOTE 3: REFER PARTS LIST FOR VALUES OF RESISTORS & CAPACITORS

MODELS G 17 SERIES

I.F. 455 Kc/s.

DRAWN	DATE	CH'ED	APP'D	DATE
K.J.D.	19.4.67.	GL.		4-7-67

ISSUE 2
NOTE 3 ADDED
CIRCUIT NO. 31 WAS 68 OHMS
CIRCUIT NO'S. 21,22 WERE 4·7K
CIRCUIT NO'S. 17,18 ADDED

ISSUE 3
CIRCUIT NO'S. 19,20,&40 ADDED.

ISSUE 4 CIRCUIT No S 9,10 WAS 640 µF
CIRCUIT No 26,27 WAS 100 K

PB1545
ISSUE 3.