SANYO

MODEL
G-1200

All-Transistorized Portable Radiograph

Service Manual

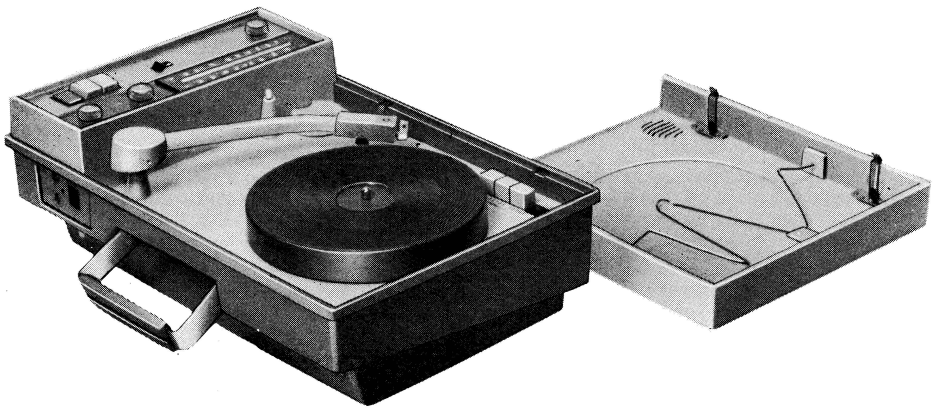

SPECIFICATIONS

CIRCUIT :
2–band 8–transistor superheterodyne
3–speed portable radio-phonograph

FREQUENCY RANGE :

MW	540 to 1,600 Kc
SW	6 to 18 Mc

INTERMEDIATE FREQUENCY : 455 Kc

POWER OUTPUT :

Maximum	600 mW
Undistorted	450 mW

LOUDSPEAKER :
4 × 6 inch permanent dynamic speaker
Voice coil impedance 4 ohms

TRANSISTOR COMPLEMENT :

1	2SA223	Local oscillator
1	2SA222	Frequency converter
1	2SA202	1st IF amplifier
1	2SA203	2nd IF amplifier
1	2SB185	1st AF amplifier
1	2SB186	2nd AF amplifier
2	2SB22	Power amplifier

DIODE & THERMISTOR :

1	Detector & AGC
1	Temperature compensator

Operates on six D–size flashlight batteries

SENSITIVITY :
MW 60 μV/m for 10mW output
SW 80 μV/m for 10mW output

TURN TABLE :
Diameter 6½″ (160 mm)

PICK-UP :
Ceramic cartridge : LP (ST) & SP

PHONO-SPEED :
33⅓, 45, 78, rpm

CABINET DIMENSIONS :

Width	14¼″ (372 mm)
Height	5″ (130 mm)
Depth	9½″ (240 mm)

NET WEIGHT :
7½ lbs (3.5 Kg) Excl. Battery

SANYO ELECTRIC CO., LTD.

MAIN PARTS CONNECTION

G-1200 MAIN PARTS CONNECTION

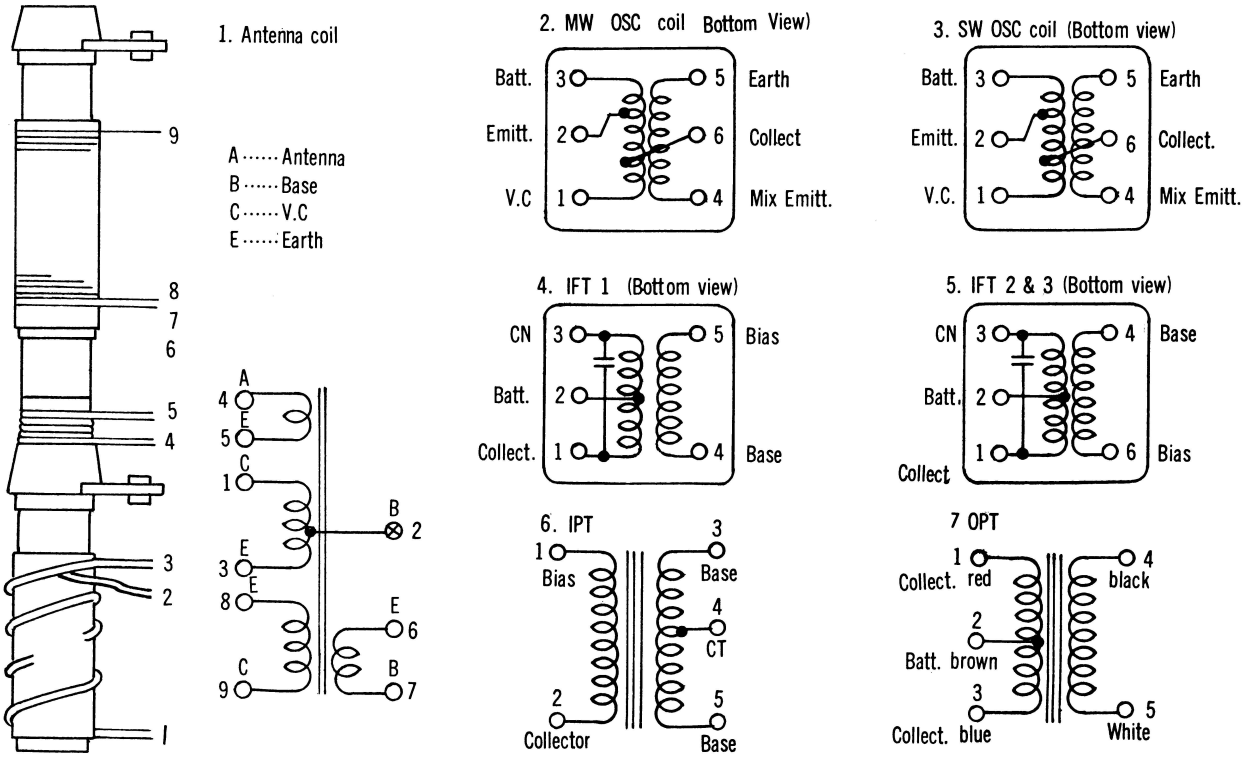

MAIN PARTS LOCATION

MAIN PARTS LOCATION

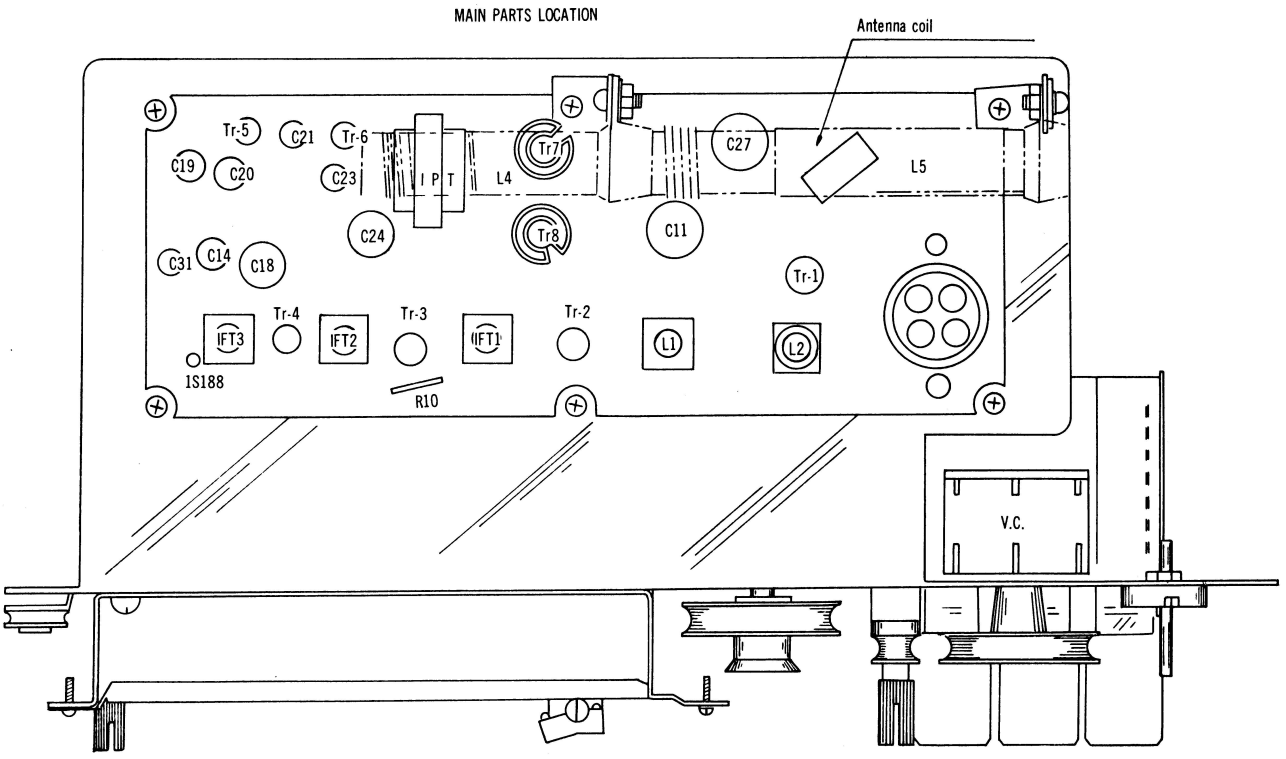

Printed in Japan

ALIGNMENT PROCEDURES

(1) Alignment of Semi-fixed Resistor :
Apply 9 volts to the receiver as power source and make a receiver tune in no signal (station).
Connect an ammeter (range : 1 mA) between two points A and B as shown in figure.
Adjust the volume of Semi-fixed resistor in order to obtain 320 μA deflection. Short-circuit the two points by soldering after adjustment.

(2) Apply volt-meter across the voice coil. Volume control should be at maximum position.
Output of signal generator should be no higher than necessary to obtain output reading in order to avoid AGC function.

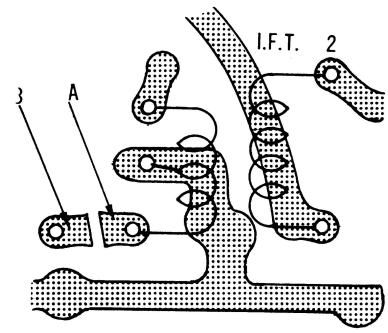

STEP	SIGNAL GENERATOR COUPLING	SIGNAL GENERATOR FREQUENCY	RADIO DIAL SETTING	ADJUST FOR MAXIMUM OUTPUT
IF ALIGNMENT				
1	High side through 0.1 mf capacitor to antenna stator lug on tuning gang. Low side to chassis.	455 Kc	Lower end	T-3 T-2 T-1
BROADCAST RF ALIGNMENT				
2	Fashion loop of several turns of wire and radiate signal into loop antenna.	520 Kc	Lower end	L-1
3		1,605 Kc	Upper end	BC osc TRIM.
4		Repeat Steps 2 and 3.		
5			600 Kc	L-5
6			1,400 Kc	BC Ant. TRIM.
7		Repeat Steps 5 and 6.		
SHORT WAVE RF ALIGNMENT				
8	Fashion loop of several turns of wire and radiate signal into loop antenna.	5.8 Mc	Lower end	L-2
9		18.5 Mc	Upper end	SW osc TRIM.
10		Repeat Steps 8 and 9.		
11		6.5 Mc	6.5 Mc	L-4
12		17.5 Mc	17.5 Mc	SW Ant. TRIM.
13		Repeat Steps 11 and 12.		

BLOCK DIAGRAM

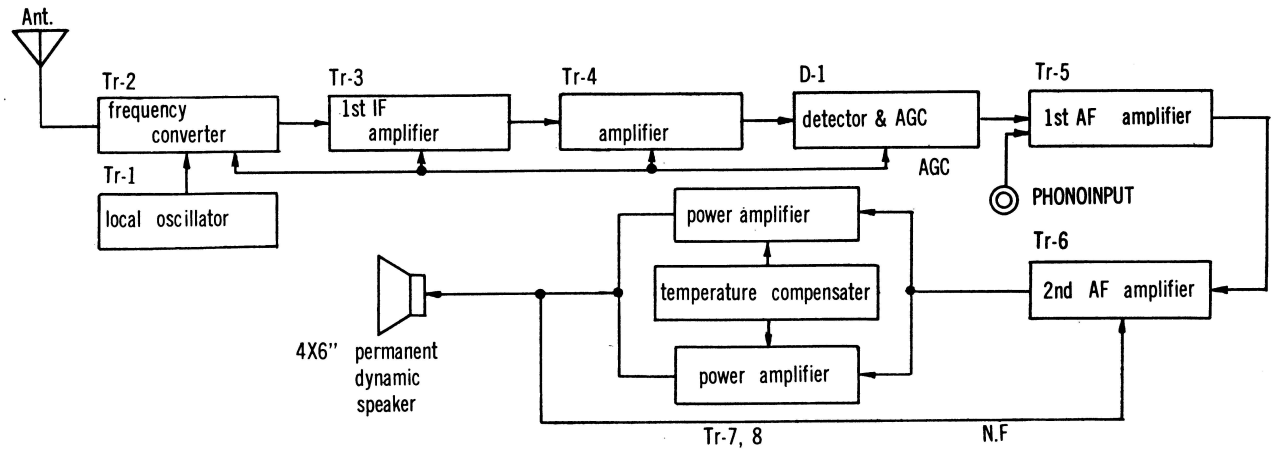

CIRCUIT DIAGRAM

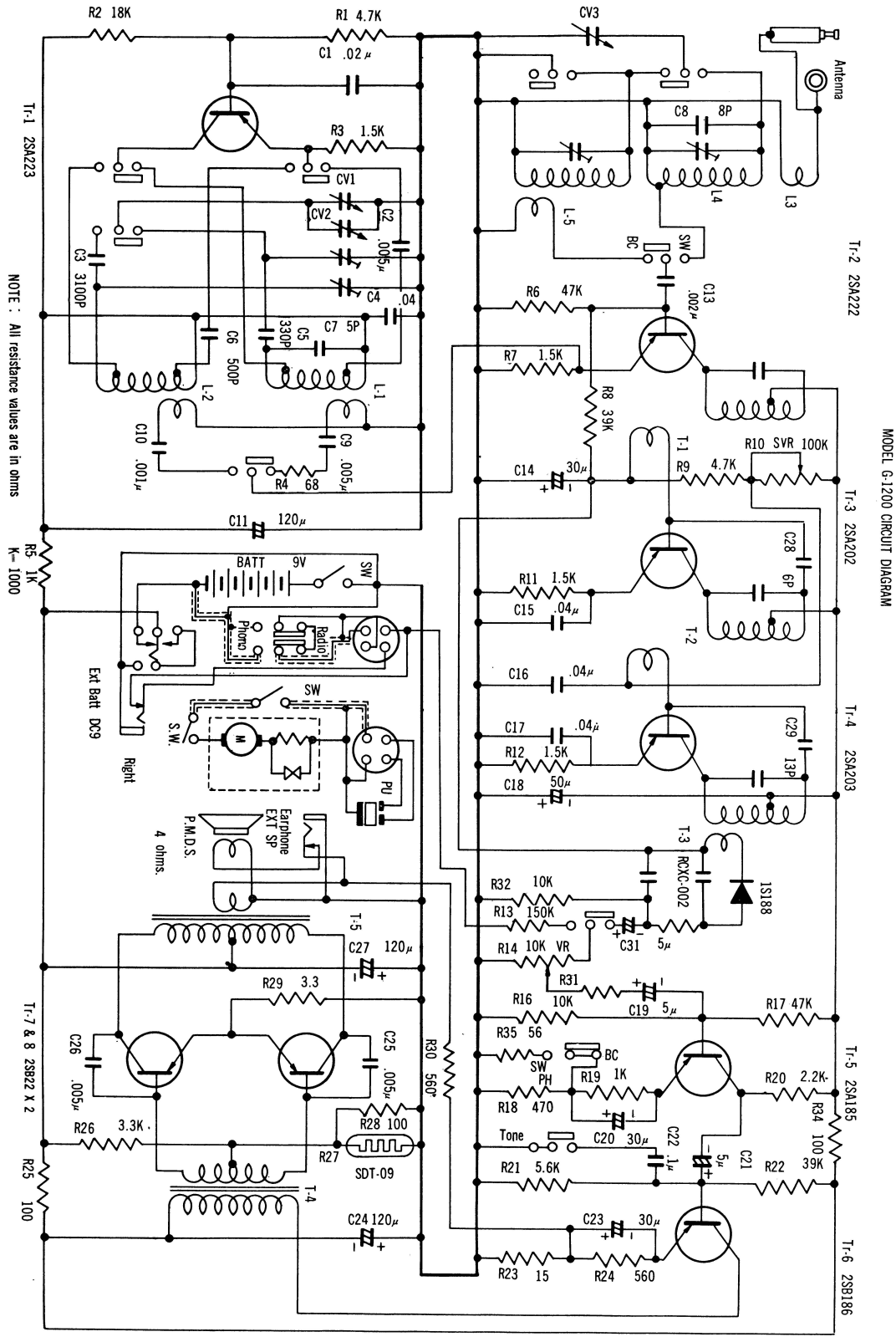

PARTS LIST

CABINET—(1)

STOCK NO.	DESCRIPTION	Q'TY
R-395008	-Cabinet case	1
R-395009	-Plastic to fix panel	1
R-395010	- 〃	1
R-395011	- 〃	1
R-395012	- 〃	1
R-395013	- 〃	1
R-395014	-Plastic to fix SP fixture board	2
R-425328	SP fixture board	1
R-435031	SP grille net	1
R-435032	〃	1
R-S85044	-Handle	1
R-115101	-Handle	1
R-115102	Metal to fix handle	1
R-245011	Insert nut	
R-395015	-Cover	1
R-245103	-Insert nut	4
R-395016	Panel	1
R-395017	-Case on cover	1
R-245091	-Insert nut	4
R-39508	-Plastic to fix record holder	2
R-395019a	Battery cover	1
R-325019	Dial	1
R-265127	Panel	1
R-265128	Badge	1
R-S85032	-Tuning knob	1
R-395020	-Knob	1
R-265113	-Decoration metal	1
R-S85033	-Fine tuning knob	1
R-395021	-Knob	1
R-265113	-Decoration metal	1
R-13056	Spring	1
R-325020	45 rpm adaptor	1
R-245092	Metal to fix battery cover	1
R-235038	〃	2
R-S85034	-Metal to fix lid fixture	2
R-115103	-Metal fixture	2
R-115104	- 〃	2
R-135006	-Spring	2
R-225005	-Rivet	2
R-335059	-Lid fixture button	4
R-245091	-Insert nut	2
R-115105	Metal fixture	2
R-235039	Press down metal	2
R-245093	Record holder	1
R-255042	Pick up holder	1
R-S85035	-Rest stand	1
R-335061	-Stand	1

CABINET—(2)

STOCK NO.	DESCRIPTION	Q'TY
R-245036	-Shaft	1
R-245097	-Shaft	1
R-335043	-Washer	1
R-135007	-C washer	1
R-265117	-Nut	1
R-255043	Holder	1
R-245096	Pipe	1
R-265129	Label	1
R-325030	Terminal	1
R-12011	Lug	1
R-115117	Metal to fix rest switch	1
R-475147	Specification sheet	1
R-445028	Cushion	1
R-S85062	-Volume control knob	1
R-395026	-Knob	1
R-265113	-Decoration metal	1
R-445029	Cushion	1
	〃	1
	〃	4
R-365026	Battery holder	2
R-395027	Warp stopper	1
R-435038	Felt	2
R-435039	〃	1
R-S8547	-Press-talk switch	1
R-S4534	-Press-talk switch	1
R-355046	-Button	3
R-S4533	Rest switch	1
R-S2520	Socket	1
R-S2521	Plug	1
R-S4209	Seesaw switch	1
R-23391	Terminal +	2
R-23392	〃 —	2
R-S8265	Antenna suction terminal	1
R-S2025b	EXT Ant. socket	1
R-S2040	Earphone jack	2
R-S1527	Telescoping antenna	1
R-S2113	EXT. Batt. socket	1
R-S1177a	EXT. amplifier plug	1
R-12004	Lug	4
R-23596	Lug	1

TRANSISTOR COMPLEMENT

	2SA223	Tr-1	1
	2SA222	Tr-2	1
	2SA202	Tr-3	1
	2SA203	Tr-4	1
	2SB185	Tr-5	1
	2SB186	Tr-6	1
	2SB22	Tr-7, 8	2

STOCK NO.	DESCRIPTION		Q'TY

DIODE & THERMISTOR

	1S188	D-1	1
	SDT-09	R27	1

CHASSIS

R-415060	Printed circuit board		1
R-115106	Chassis		1
R-325022	Drum		1
R-325023	Pulley		1
R-24384	Pulley		1
R-325017	Pulley		1
R-245085	Pulley shaft		1
R-S85037	-Shaft		1
R-245094	-Shaft		1
R-245087	-Bearing		1
	-Nut		1
R-135003	-C washer		1
R-115107	Guide rail		1
R-235042	Guide		1
R-265114	Back plate		1
R-115108	Metal to fix antenna coil		2
R-44046	Cushion		1
	Dial rope		1
	〃		1
R-12011	Lug		4
R-15168	Coil spring		1
R-155016	Coil spring		1
	Eyelet		1

ELECTRIC

R-S8546	-Antenna coil	L3, 4, 5	1
R-W2526	-Antenna coil		1
R-35077b	-Antenna holder		2
R-C1029a	V. C.	CV1, 3	1
R-C1095	V. C.	CV2	1
R-W8014	OSC coil	L1	1
R-W8015	OSC coil	L2	1
R-W5T521	I. F. T.	T-1	1
R-W5T514	I. F. T.	T-2	1
R-W5T060	I. F. T.	T-3	1
R-R11007	Semi V. R.	R10	1
R-R116515	V. R.	R14	1
R-W6181	I. P. T.	T-4	1
R-W6535	O. P. T.	T-5	1
R-S6535	Speaker		1
R-S6529	P. U.		1
R-S6210	Earphone		1
R-S5601	Motor		1

STOCK NO.	DESCRIPTION		Q'TY

ELECTROLYTIC CAPACITORS

R-C9091	10 V	120 μF	C11, 24	2
R-C9091	〃	〃	C27	1
R-C9081	9 V	50 μF	C18	1
R-C9098	6 V	5 μF	C19, 31	2
R-C9098	〃	〃	C21	1
R-C9080	3 V	30 μF	C14, 20	2
R-C9080	〃	〃	C23	1

PACKED CAPACITOR & RESISTOR

R-CXC002	200 ohm + 0.01 μF × 2	1

FIXED CAPACITORS

R-	0.0005μF	+30%	−20%	C6	Mylar	1
R-	0.002 〃	〃	〃	C13	〃	1
R-	0.001 〃	〃	〃	C10	〃	1
R-	0.005 〃	〃	〃	C2, 9	〃	2
R-	〃 〃	〃	〃	C25, 26	〃	2
R-	0.04 〃	〃	〃	C4	Ceramic	1
R-	0.02 〃	〃	〃	C1	Mylar	1
R-	0.04 〃	〃	〃	C15, 16	〃	2
R-	〃 〃	〃	〃	C17	〃	1
R-	0.1 〃	〃	〃	C22	〃	1
R-	8 pF	±10%		C8	Ceramic	1
R-	5 〃	±0.5%		C7	〃	1
R-	330 〃	±10%		C5		1
R-	3100 〃	〃		C3		1
R-	13 〃	〃		C29		1
R-	6 〃	±0.5%		C28		1

FIXED RESISTORS

R-	3.3 ohm	±10%	¼ or ½ W	R29	Solid	1
R-	15 〃	〃	〃	R23	〃	1
R-	68 〃	〃	〃	R4	〃	1
R-	100 〃	〃	〃	R25, 28	〃	2
R-	〃 〃	〃	〃	R43	〃	1
R-	470 〃	〃	〃	R18	〃	1
R-	560 〃	〃	〃	R24, 30	〃	2
R-	1K 〃	〃	〃	R5, 19	〃	2
R-	1.5 〃	〃	〃	R3, 7, 11	〃	3
R-	〃 〃	〃	〃	R12	〃	1
R-	2.2 〃	〃	〃	R20	〃	1
R-	3.3 〃	〃	〃	R26, 31	〃	2
R-	4.7 〃	〃	〃	R1, 9	〃	2
R-	5.6 〃	〃	〃	R21	〃	1
R-	10 〃	〃	〃	R16, 32	〃	2
R-	18 〃	〃	〃	R2	〃	1
R-	39 〃	〃	〃	R8, 22	〃	2
R-	47 〃	〃	〃	R6, 17	〃	2
R-	150 〃	〃	〃	R13	〃	1
R-	56 〃	〃	〃	R35	〃	1
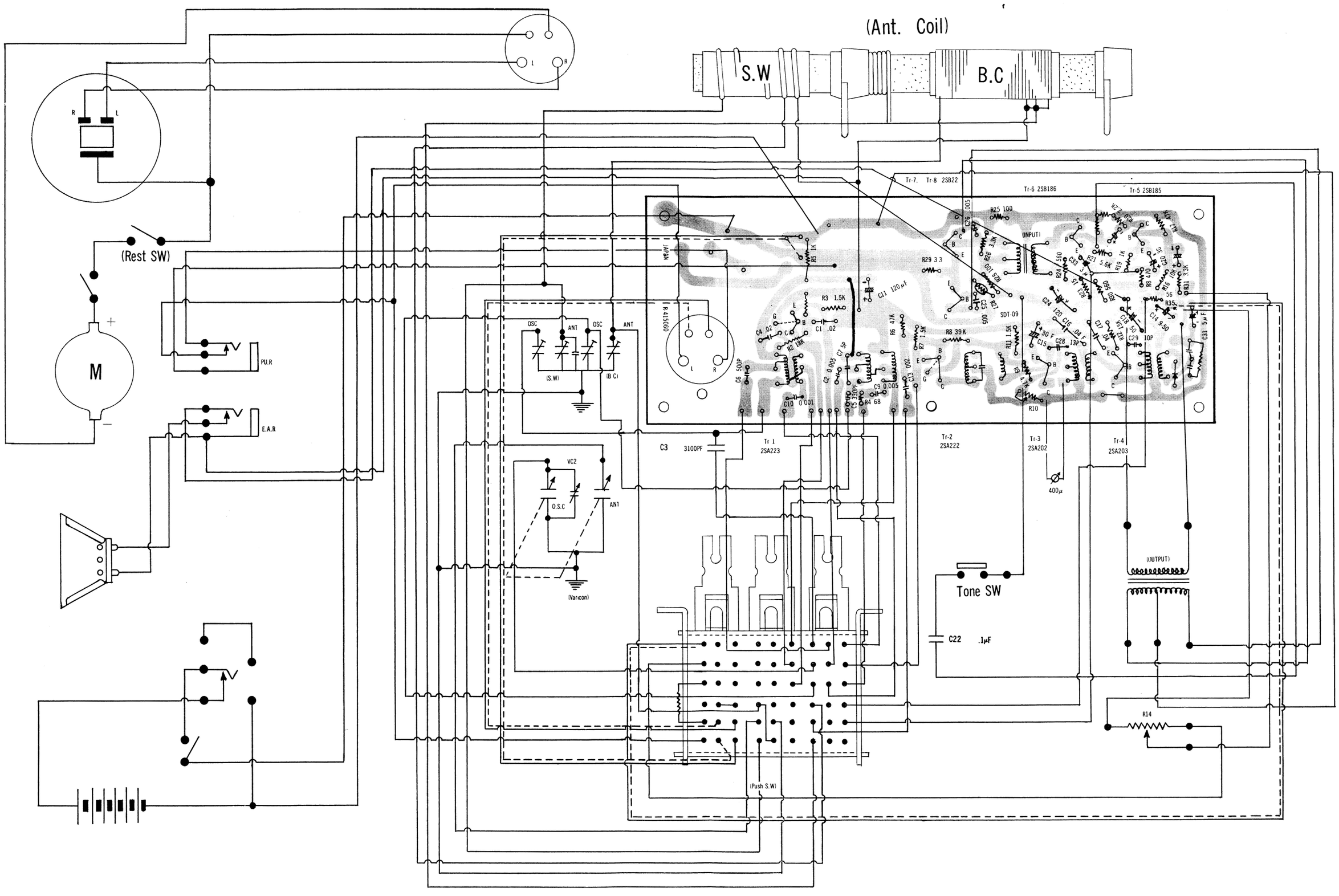
INTER-PARTS CONNECTION