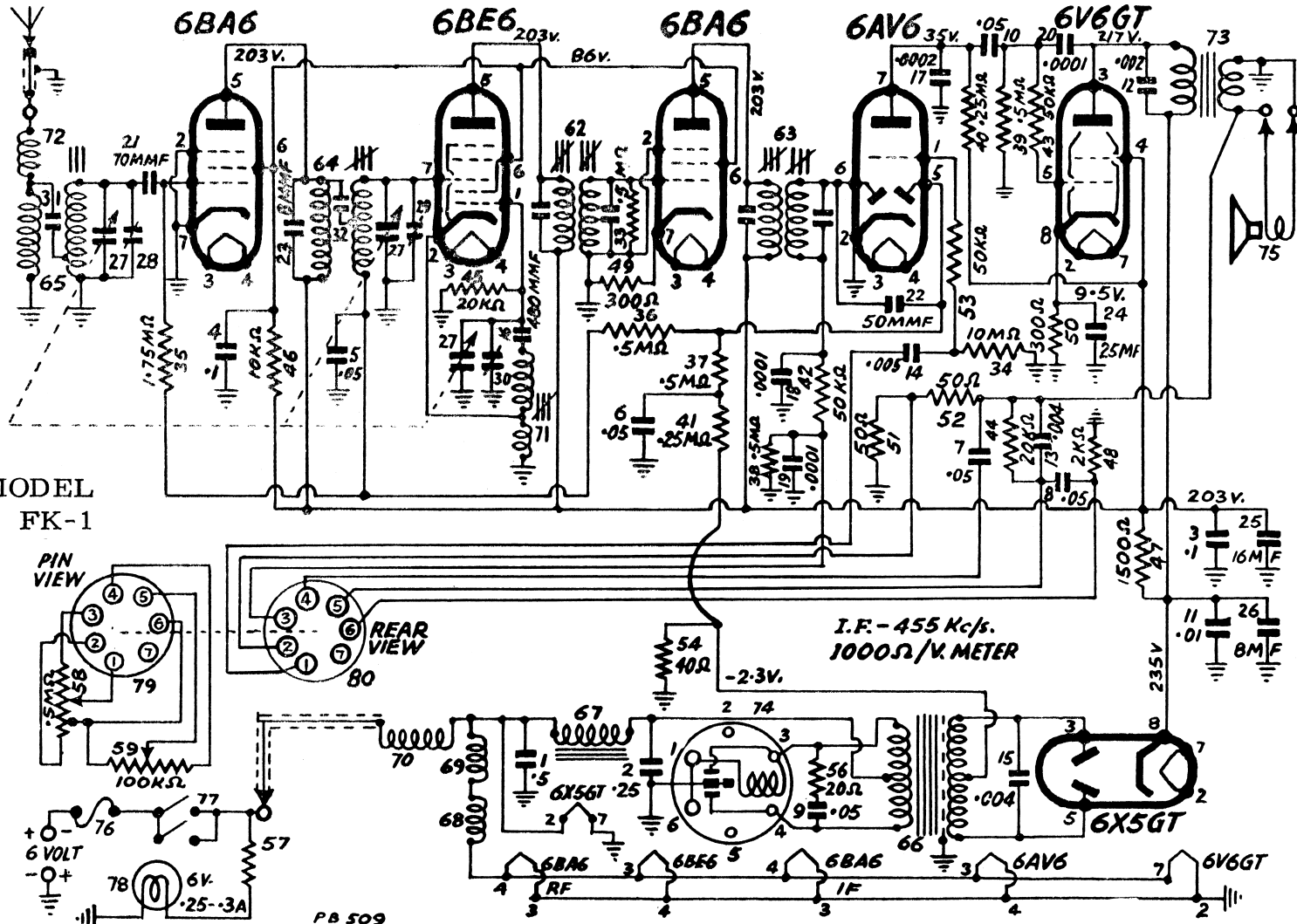

MODEL FK-1

VOLTAGE MEASURED TO CHASSIS WITH 1000Ω/V METER