N227 NIVICO MODEL FA-900M

NIVICO

SERVICE NOTE

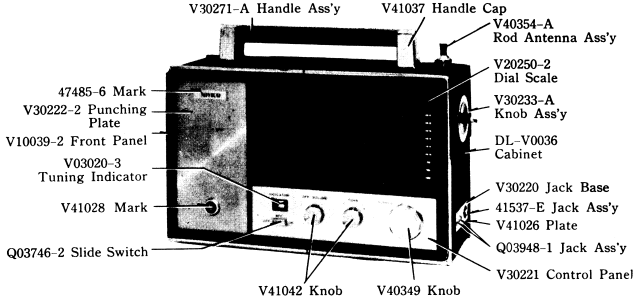

MODEL FA-900N

12 TRANSISTOR 9 BAND FM-AM RADIO

DIMENTIONS: H 9″, W 14 ⅛, D 5 ¼″ **WEIGHT:** 10.5 lbs. (With Battery)

SPECIFICATIONS

Frequency Range:
FM 87~108MC
LW 150~400KC
AM 540~1600KC
SW1 2~4MC
SW2 4.7~10MC
SW3 11.6~12.1MC (25m Spread Band)
SW4 15.0~15.7MC (19m Spread Band)
SW5 17.5~18.2MC (16m Spread Band)
SW6 21.2~22.0MC (13m Spread Band)

Intermediate Frequency: FM 10.7MC, AM 455KC

Transistor:
X1 2SC535 FM RF Amp.
X2 2SC461 FM Convertor
X3 2SC460 AM RF Amp. & FM DC Amp. for T. Indicator
X4 2SC460 AM Oscillator
X5 2SC460 AM Mixer
X6 2SC460 FM IF Amp.
X7 2SC40 FM & AM Amp.
X8 2SC460 FM & AM Amp.
X9 2SB75 AF Amp.
X10 2SB75 Driver
X11 2SB156A, X12 2SB156A } Power Amp.

Thermistor: Th D-IE Automatic Temperature Control

Diode:
D1 IS85 FM AFC
D2 IN34A AM Overload AGC
D3 IN34A FM AGC
D4 1N60, D5 1N60 } FM Detector
D6 IN34A AM Detector & AGC
D7 SW-05, D8 SW-05 } Rectifier
D9 IN 34A FM Overload AGC

Output Power: IW Max.

Speaker: 4″×6″ Oval Cone Speaker

Antenna: Ferrite Core Antenna (LW, AM)
Rod Antenna (FM, SW1~6)

Tone Control: Volume Type

Check Light: Push Type

External Jacks: Tuner Output Jack
External Antenna Jack
Earphone Jack (2pcs)

Power Source: Battery (6pcs. of JIS UM-1, Size ASA Designation "D" Cell or Equivalent)
AC 117V 50~60 ⁄⁄s

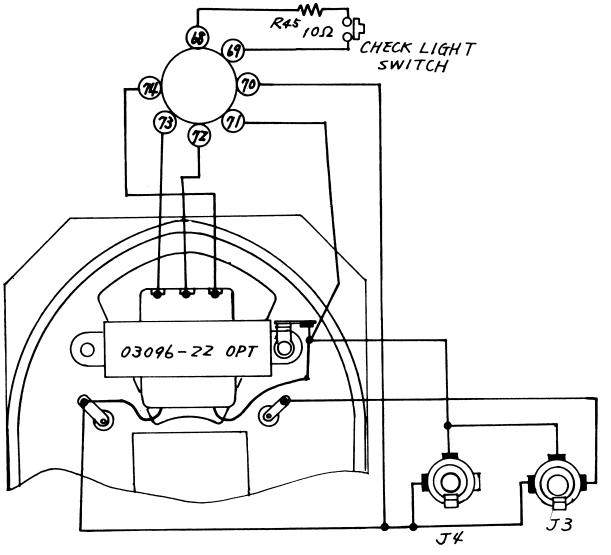

Fig. 17 Speaker & Others

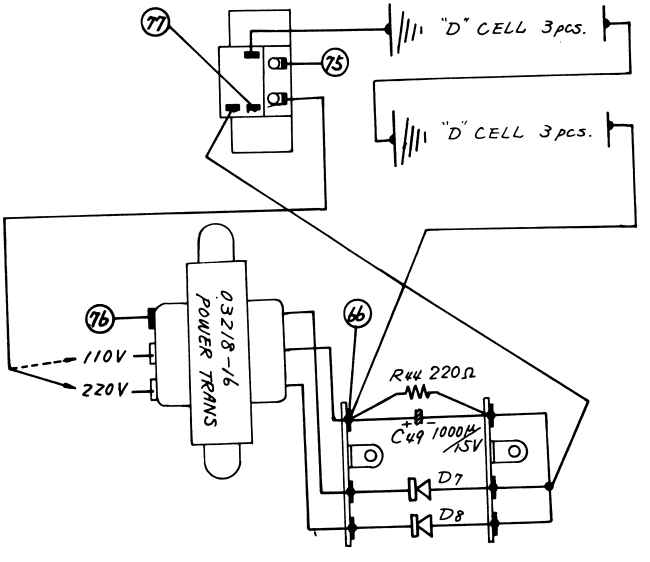

AC Adaptor Section

N227 NIVICO MODEL FA-900M

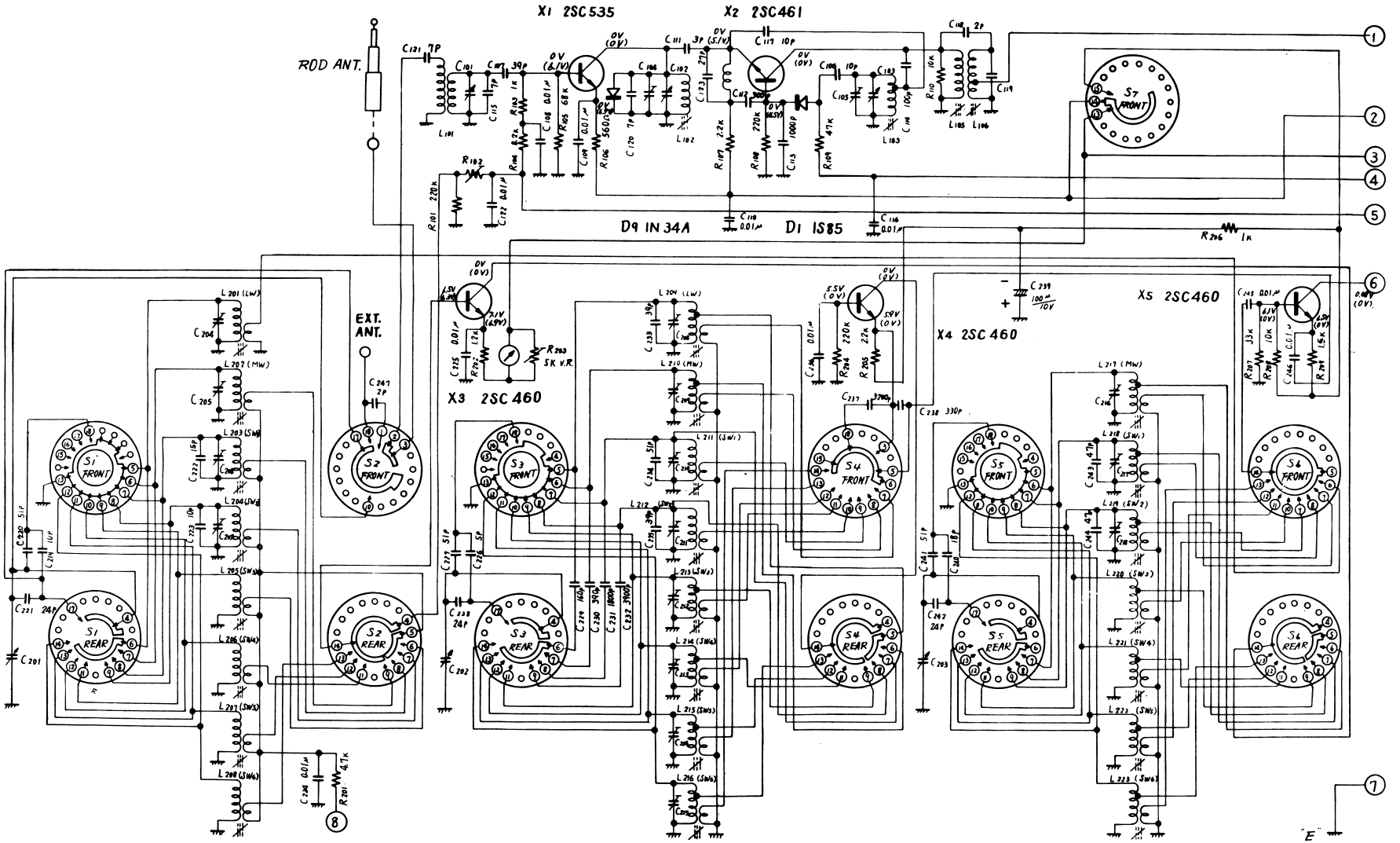

Note : 1. Schematic is shown with band select (S1~S7) in FM position.

2. Voltages (negative value) are measured with no signal using V.T.V.M against "E" potential. ( ) Values at FM.

Schematic Diagram of Model FA-900N (Tuner)

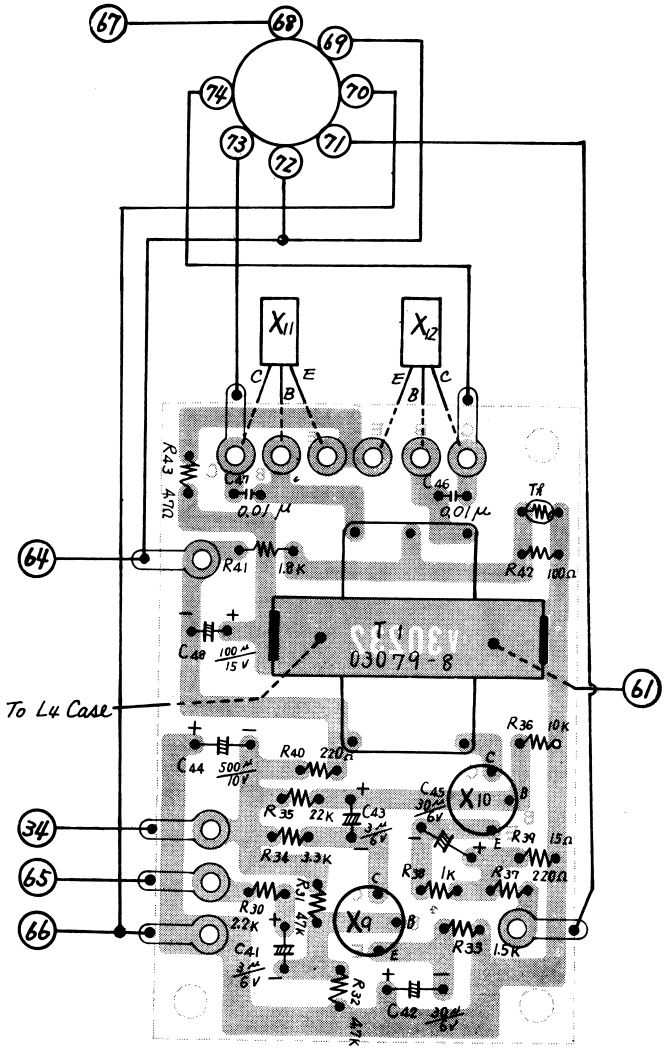

Fig. 14

Parts Arrangement (AF Circuit Board)

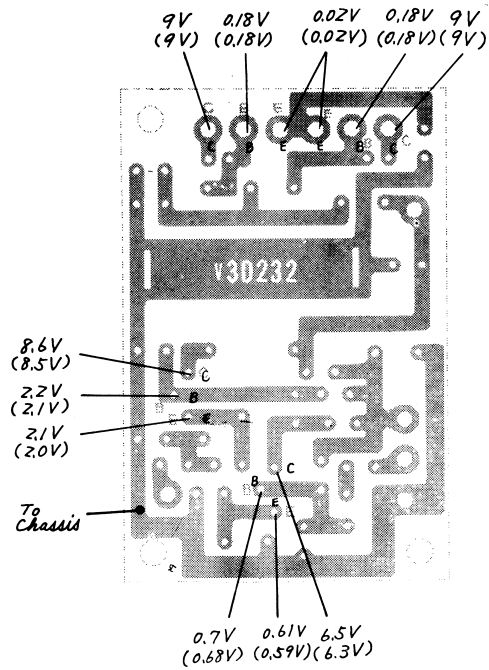

Fig. 15

Terminal Voltage (AF Circuit Board)

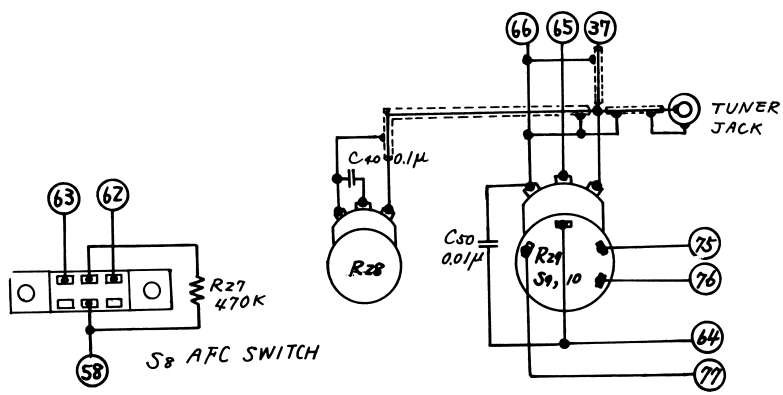

Fig. 16

V. Resistor & AFC Switch

N227 NIVICO MODEL FA-900M

Coil Construction

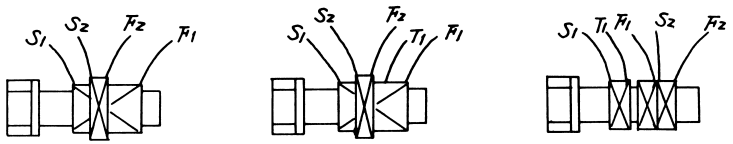

L203, L204, L205, L206, L207, L208, L211, L212

L213, L214, L215, L216, L218, L219, L220, L221, L222, L223, L209, L210

L217

Fig. 8 (B)

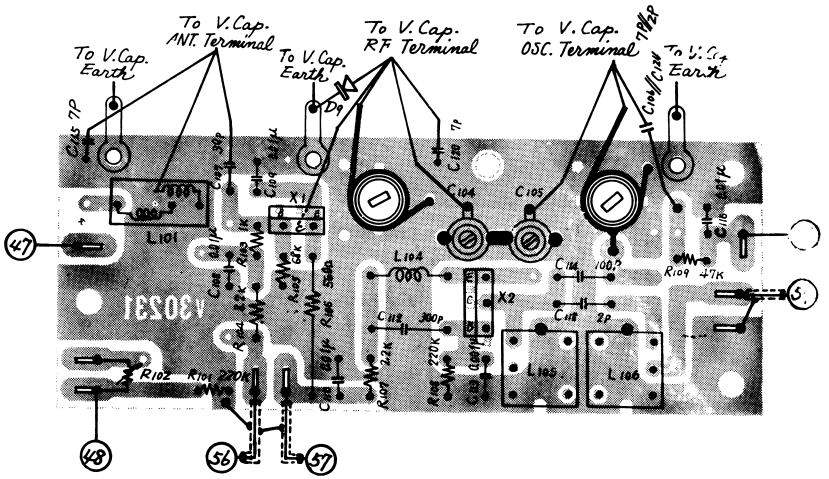

Fig. 10

Parts Arrangement (FM. RF Circuit Board)

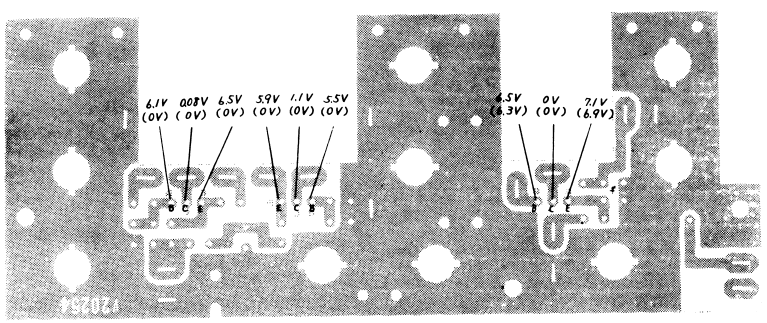

Fig. 9

Terminal Voltage (AM RF Circuit Board)

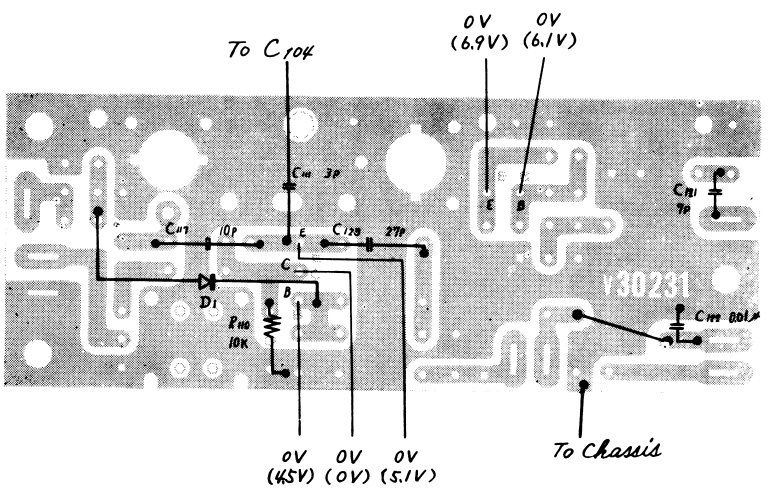

Fig. 11

Terminal Voltage (FM. RF Circuit Board)

9	MW	525KC	Standard Loop Antenna	L210	Maximum Capacity
10		1650KC		C209	Minimum Capacity
11		Repeat step 9, 10			
12		620KC	Standard Loop Antenna	L202, 217	620KC Signal
13		1400KC		C205, 216	1400KC Signal
14		Repeat step 12, 13			
15	SW1	1.9MC	※	L211	Maximum Capacity
16		4.3MC		C210	Minimum Capacity
17		Repeat step 15, 16			
18		2.0MC	※	L203, 218	2.0MC Signal
19		4.0MC		C206, 217	4.0MC Signal
20		Repeat step 18, 19			
21	SW2	4.6MC	※	L212	Maximum Capacity
22		10.5MC		C211	Minimum Capacity
23		Repeat step 21, 22			
24		4.7MC	※	L204, 219	4.7MC Signal
25		10.0MC		C207, 218	10.0MC Signal
26		Repeat step 24, 25			
27	SW3	11.5MC	※	L213	Maximum Capacity
28		12.2MC		C212	Minimum Capacity
29		Repeat step 27, 28			
30		11.8MC	※	L205, 220	11.8MC Signal
31	SW4	14.9MC	※	L214	Maximum Capacity
32		15.8MC		C213	Minimum Capacity
33		Repeat step 31, 32			
34		15.3MC	※	L206, 221	15.3MC Signal
35	SW5	17.3MC	※	L215	Maximum Capacity
36		18.4MC		C214	Minimum Capacity
37		Repeat step 35, 36			
38		17.8MC	※	L207, 222	17.8MC Signal
39	SW6	21.0MC	※	L216	Maximnm Capacity
40		22.3MC		C215	Minimum Capacity
41		Repeat step 33, 40			
42		21.6MC	※	L208, 223	21.6MC Signal

※ Through Dummy Antenna (Fig. 5), connect to the white lead wire which is connected to rod Antenna.

Note: For each band of SW 3, 4, 5, 6, the local oscillation frequency must be aligned lower than signal frequency by 455KC, and when alignment of SW 1, 2, 3, 4, 5, 6, the rod antenna must be disconnected.

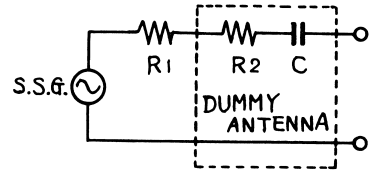

$R_1 + R_2 = 80\Omega$
$C = 20\,pF$
R_1: S.S.G. Internal Impedance

Fig. 5

4. FM IF Alignment

Volume Control: Minimum

1) Connect the out clip of T.V. sweep generator's IF/RF OUTPUT lead to the local oscillator terminal of V. Cap. and also the other clip to the earth.
2) Connect the scope terminal of T.V. sweep generator to H. Input of oscilloscope, and also the ground terminal to earth of the H. Input.
3) IF Alignment
   (a) Give the output from emitter side of X8 to V. Input of oscilloscope.
   (b) Give the unmodulated 10.7MC marker of S.S.G. to the set.
   (c) Align L105, 106, 1, 2 so that the maximum sensitivity and symmetrical wave mode will be obtained, setting the 10.7MC marker on the peak.
4) Discriminator Alignment
   (a) Give the output from detector transformer to V. INPUT of oscilloscope.
   (b) Give the 10.7MC marker of 50~60 db output modulated to 30~60% by AM from S.S.G. to set.
   (c) Align L4 so that the sign wave appearing on the flyback line of "S" Curve will disappear.
   (b) Align L3 so that the response of the "S" curve will become maximum and symmetry.
5) Repeat the step 3), 4), and make sure that IF peak and center point of the "S" curve will exactly coincide with 10.7MC marker.

5. FM RF Alignment

Volume Control : Maximum
Input Signal : Use 75Ω terminal of S.S.G.
400% modulation, 22.5KC deviation.

Step	Input		Places to be aligned	Position of V. Cap.
	Frequency	It is given to		
1	86MC	※	L103	Maximum Capacity
2	110MC		C103	Minimum Capacity
3	Repeat step 1, 2			
4	87MC	※	L102	87MC Signal
5	98MC		C102	98MC Signal
6	Repeat step 4, 5			

※ White lead wire which is connected to rod antenna.

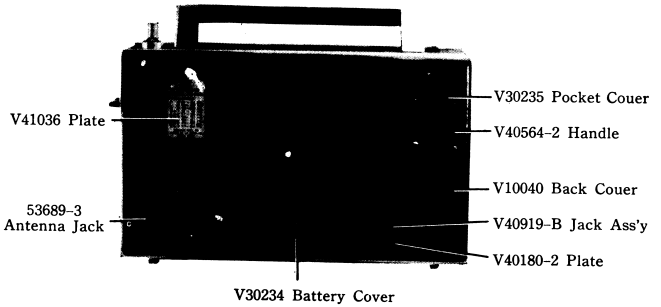

Fig. 1

To remove chassis

1. Remove five screws on the Back Cover
2. Open the Battery Cover pushing it downward and remove a screw on the battery case.
3. Remove eight screws on the bottom of the cabinet.
4. Remove three front knobs and side knob.
5. Remove two nuts "A" as indicated in Fig. 2.
6. Disconnect the white lead wire which is connected to the rod antenna.
7. Pull up the rod antenna.
8. Pull out the chassis from the right side.

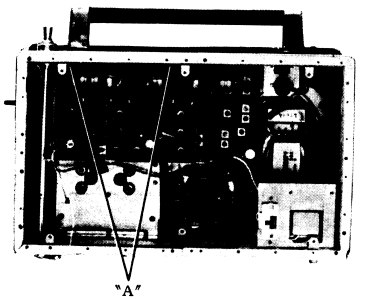

Fig. 2

To fit the dial cord

1. Tuning
   Cord Length : 0.7φ × 1050m/m (Tetoron)

2. Band Switch
   Cord Length : 0.7φ × 520m/m

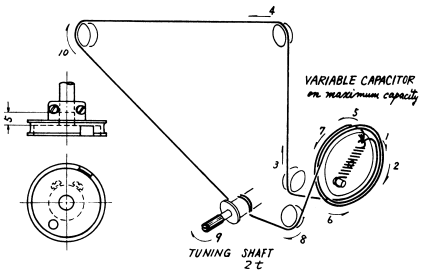

Fig. 3

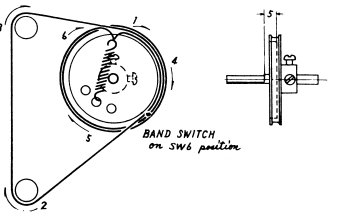

Fig. 4

ALIGNMENT

1. Set as follows before alignment
   Power Source : DC 9V
   Tone Control : Maximum
   AFC : "OFF" position
2. Alignment of Tuning Indicator

Step	Band	Position of the Indicator	Places to be aligned
1	A M	Max to left	R203
1	F M	〃	R102

3. AM IF & RF Alignment
   Volume Control : Maximum
   Input Signal : Test Oscillator modulated to 400%, 30%.

Step	Band	Input		Places to be aligned	Position of V. Cap
		Frequency	It is given to		
1	MW	455KC	RFV. Cap (C203)	L 5, 6, 7, 8, 9	Minimum Capacity
2	MW	Repeat step 1			
3	L W	145KC	Standard Loop Antenna	L209	Maximum Capacity
4	L W	410KC	Standard Loop Antenna	C208	Minimum Capacity
5	L W	Repeat step 3, 4			
6	L W	150KC	Standard Loop Antenna	L201	150KC Signal
7	L W	400KC	Standard Loop Antenna	C204	400KC Signal
8	L W	Repeat step 6, 7			

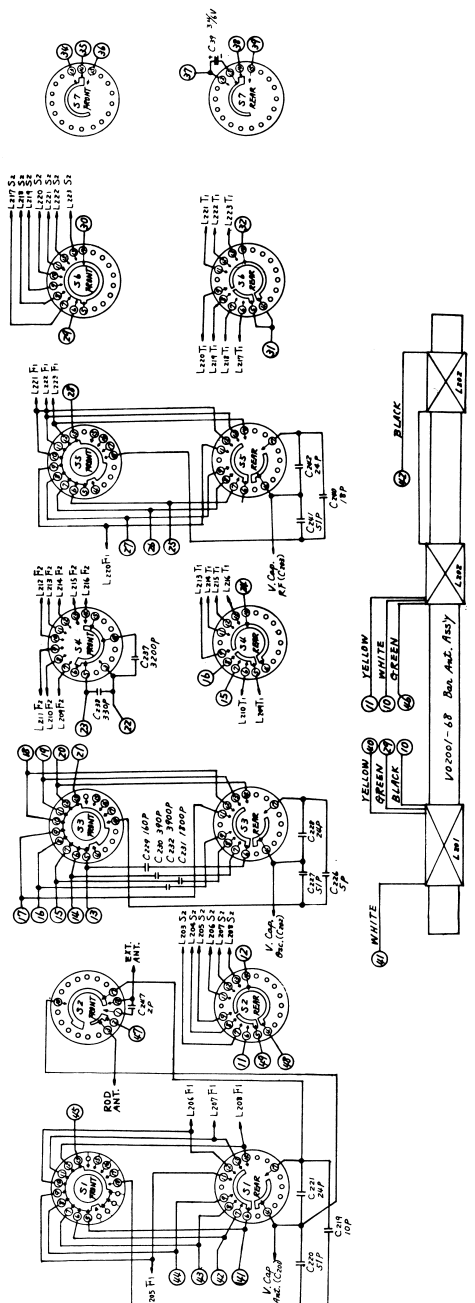

Fig. 6

Connection of Rotary Switch

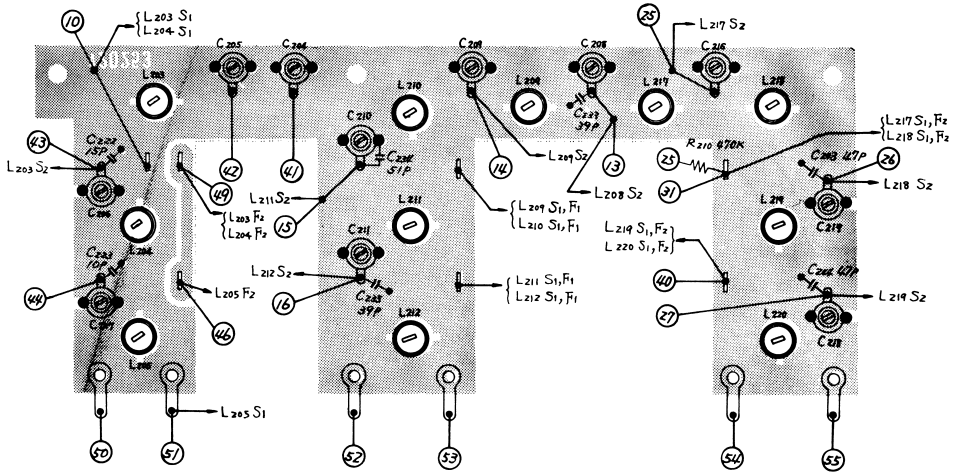

Fig. 7

Parts Arrangement (AM. RF Circuit Board "H")

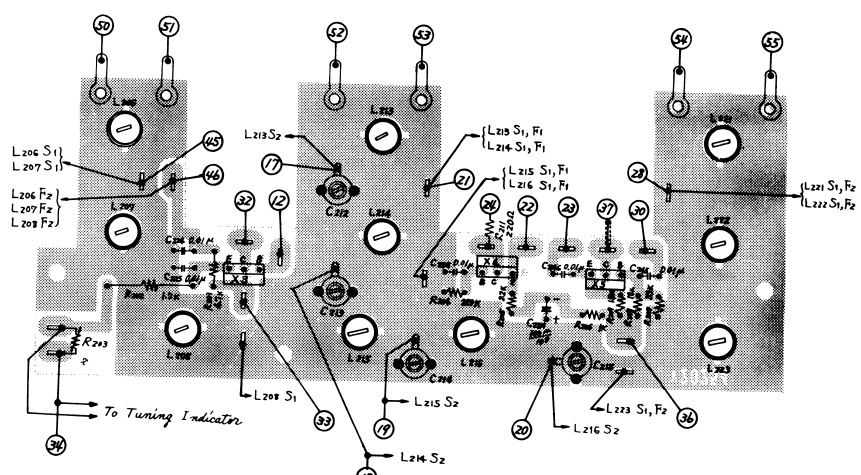

Fig. 8 (A)

Parts Arrangement (AM. RF Circuit Board "V")

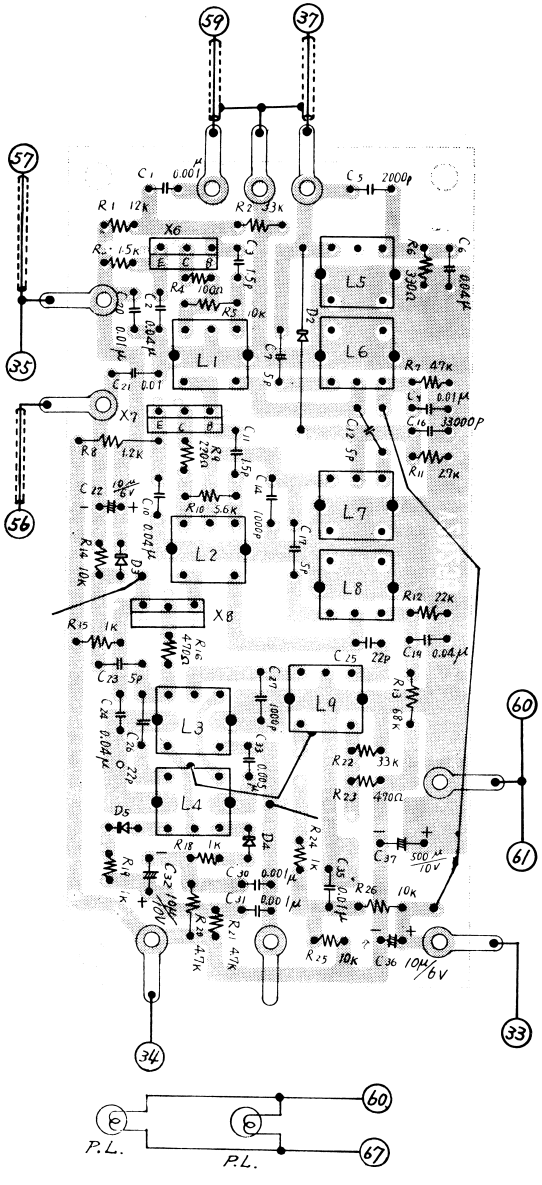

Fig. 12

Parts Arrangement (IF Circuit Board)

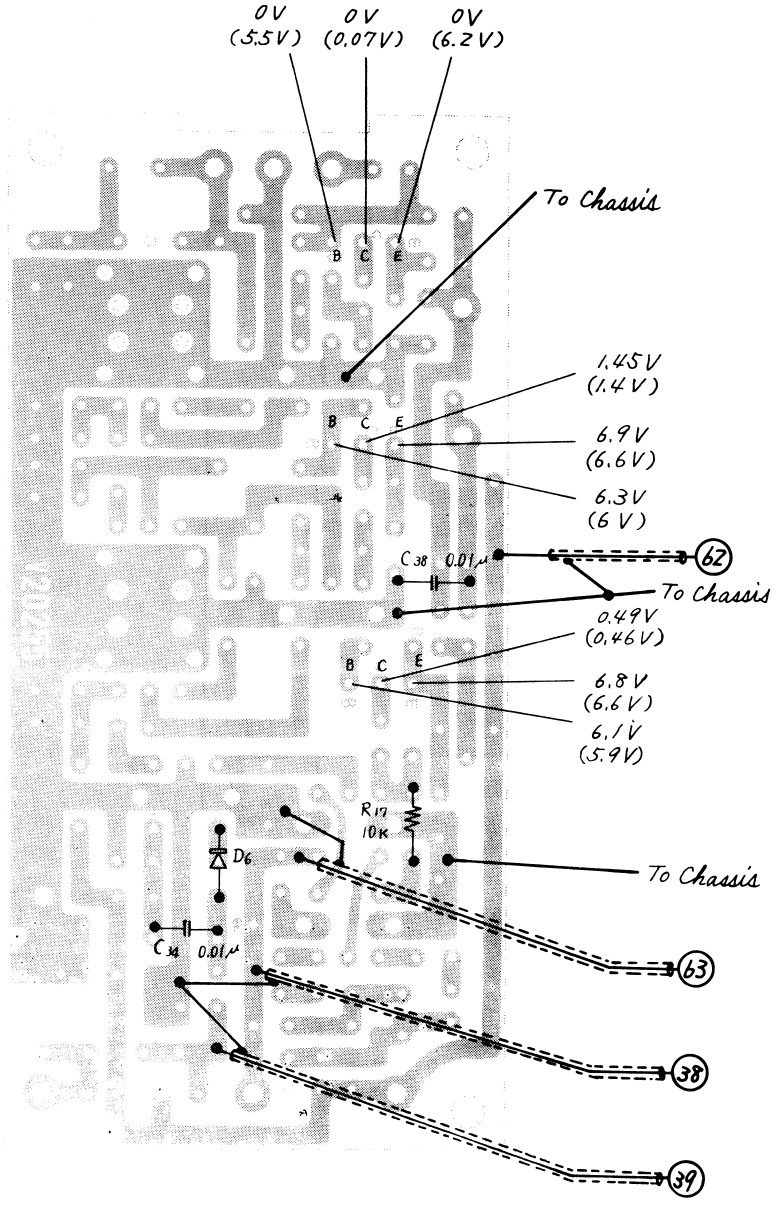

Fig. 13

Terminal Voltage (IF Circuit Board)

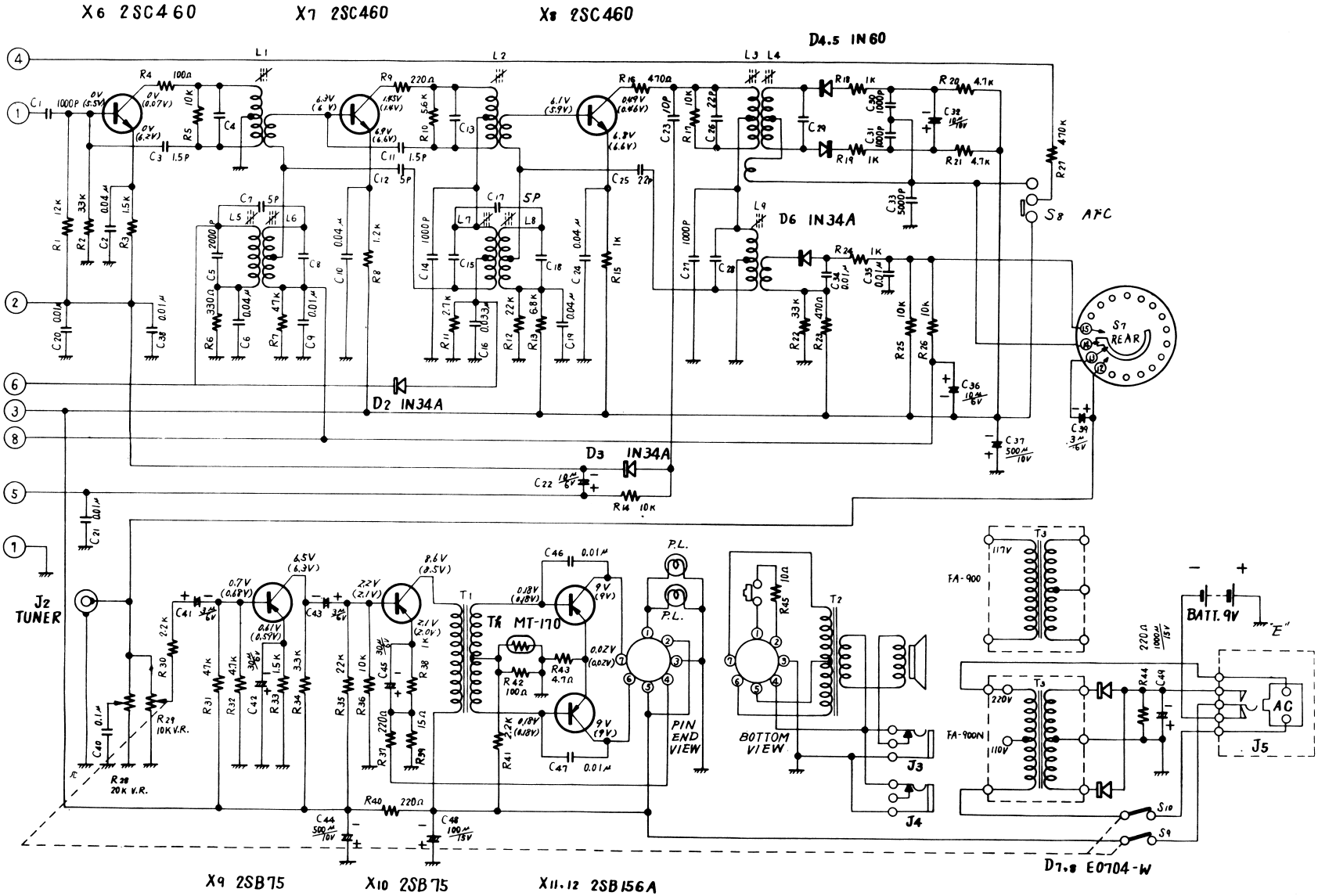

Note : 1. Schematic is shown with band select switch (S1～S7) in FM position.

2. Voltages (negative value) are measured with no signal using V.T.V.M from "E" potential. ( ) Values at FM.

Schematic Diagram of Model FA-900N (IF & AF)