SPECIFICATIONS

Circuit System	7 transistor plus 2 diode superheterodyne with an RF amplifier and push button tuning
Frequency Range	540 - 1650 KHz
Intermediate Frequency	455 KHz
Sensitivity (for 500mW output)	10μV (12V/6V)
Signal to Noise Ratio	26dB (at 56uV signal input)
Selectivity	20dB (at 10KHz tuned off from 1000 KHz)
Output Power	Maximum 5.0W (12V) 2.5W (6V) Undistorted 3.5W (12V) 1.5W (6V)
Power Supply	12V and 6V (Negative ground polarity)
Current Drain	Maximum output Minimum 200 mA (12V) 310 mA (6V)
Speaker	5" permanent dynamic type 4 ohm voice coil impedance
Transistors	2SA322 RF Amplifier; 2SA322 Frequency Converter; 2SA322 IF Amplifier; 2SC537E Audio Amplifier; 2SC537E Audio Driver; 2SB474 x 2 Audio Output
Diodes	1S188 Detector; 1S188 A.G.C.
Dimensions	Width 170mm (6¾"); Hight 44mm (1¾"); Depth 140mm (5½")
Weight	1 kg (2.2 lbs.)

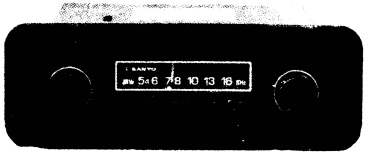

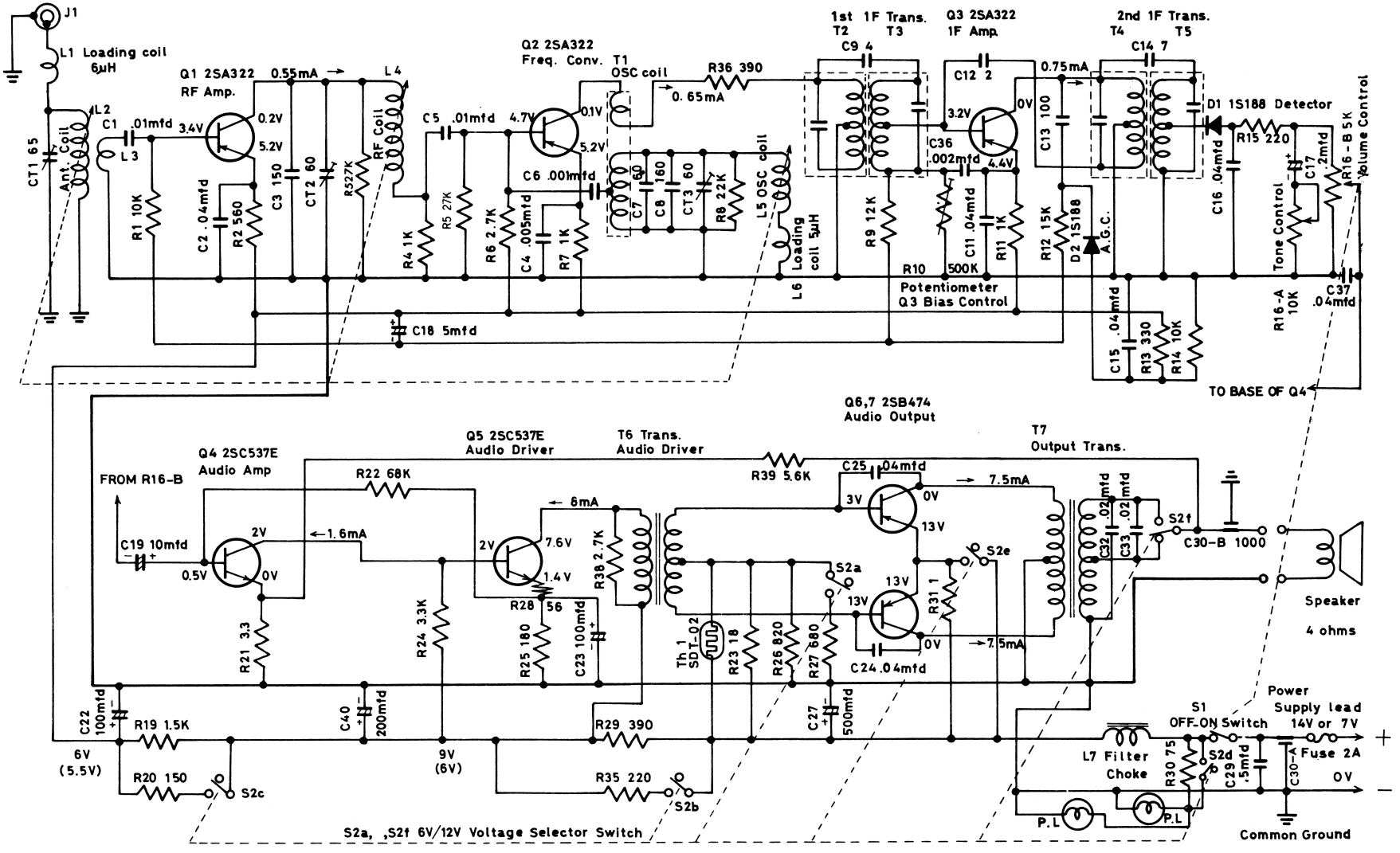

NOTE 1. Switch S2 is shown in 12V position.
2. All resistance values in ohms. K=1000
3. Capacitors, more than 1 are in picofarads unless otherwise noted
4. Voltages in ( ) are for 6V operation.
5. Potentiometer R10 should be adjustec to obtain a voltage drop of 0.5 to 0.6 volt across a resistor (R11 1K ohms).
6. Voltages measured with a vacuum tube volt meter from common ground to respective points.

S115 Sanyo F-2230

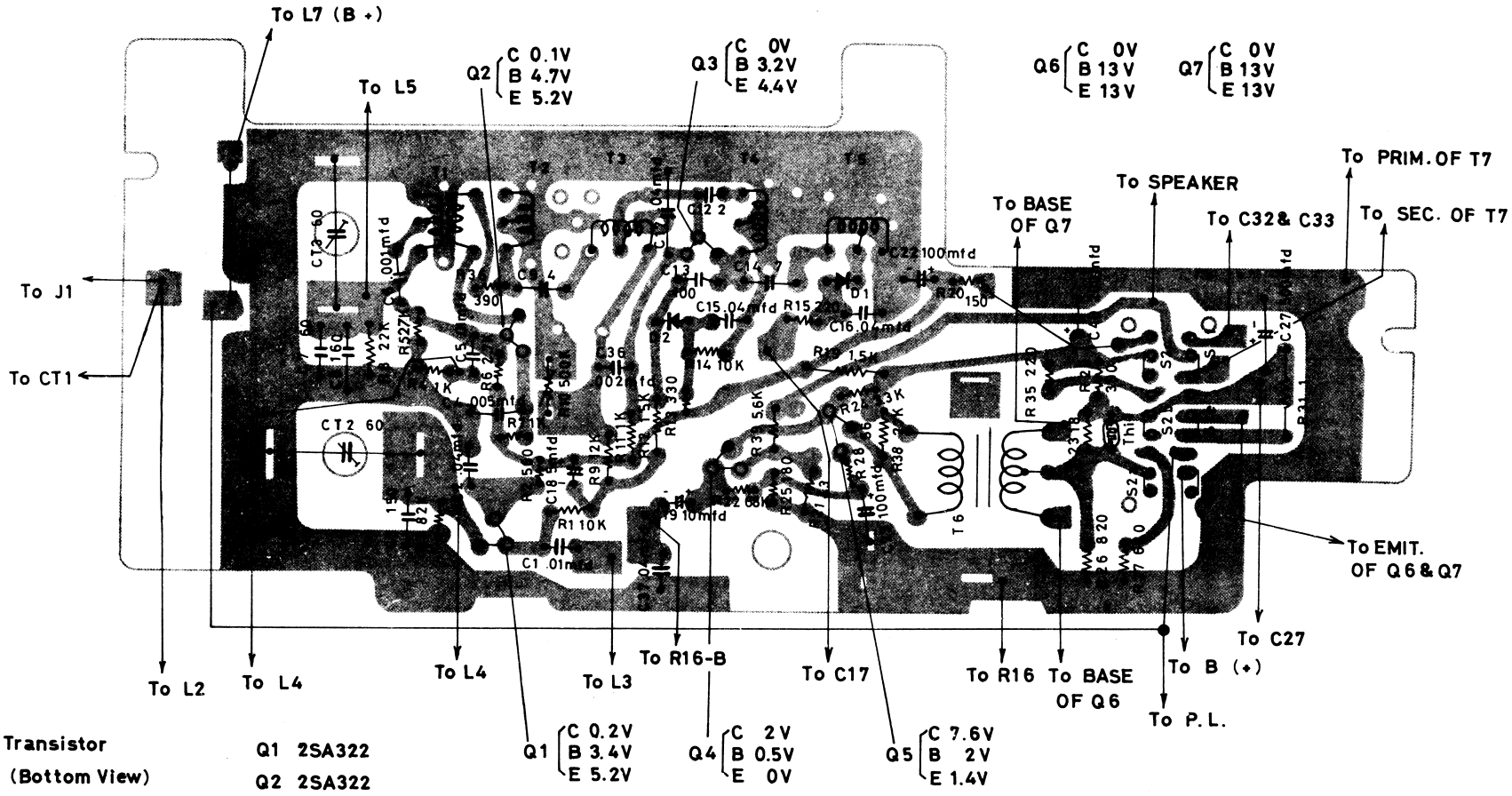

Transistor
(Bottom View)

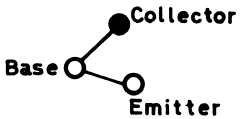

Q1	2SA322
Q2	2SA322
Q3	2SA322
Q4	2SC537
Q5	2SC537
Q6	2SB474
Q7	2SB474
D1, 2	1S188

Switch S2
(Bottom View)

NOTE
1. Switch S2 is shown in 12V position.
2. Potentiometer R10 should be adjusted to obtain a voltage drop of 0.5 to 0.6 volt across a resistor (R11 1K ohms).
3. All resistance values in ohms K=1000 M=1000000
4. Capacitors more than 1 are in picofarads unless otherwise noted.
5. Voltages given are for 12V operation.
6. Voltages measured with a vacuum tube voltmeter from common ground to respective points.