eurovox

SERVICE MANUAL

DUAL GRAPHIC EQUALIZER

Separate Frequency Controls for Front and Rear Speakers,
Presence and High/Low Attenuator Switches, Illuminated Frequency Scale.

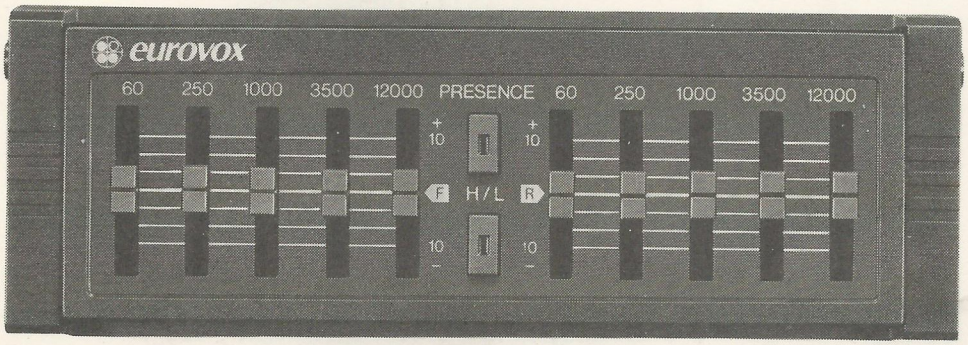

EQ-904

Printed in Japan Oct. '84 Modification Reserved

LOCATION OF CONTROLS

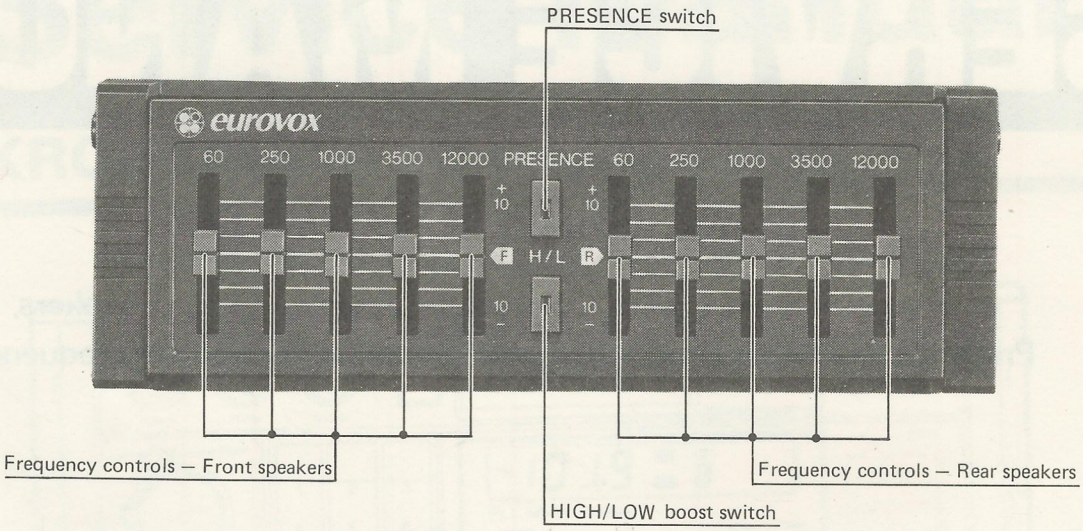

GENERAL INFORMATION

SEMICONDUCTORS: 6 ICs, 11 Transistors, 4 Diodes, 2 LEDs

DESCRIPTION	REF. NO.	Q'TY	EQUIVALENT
EQUALIZER AMPLIFIER			
Quad bilateral switch IC μPD4066BC	IC151, 351	2	HFE4066BP, TC4066BP
Operational amplifier IC M5218L	IC152, 352	2	
5ch graphic equalizer IC AD1001	IC153, 353	2	
Dimmer control transistor 2SD400(F)	Q1	1	
Voltage regulator transistor 2SD400(F)	Q3	1	
Dimmer control transistor 2SC2603(E) or (F)	Q2	1	2SC2785(E) or (F), 2SC536(F) or (G), 2SC1740S(Q) or (R)
Low/High switch transistor 2SC2603(E) or (F)	Q102, 202, 302, 402	4	2SC2785(E) or (F), 2SC536(F) or (G), 2SC1740S(Q) or (R)
Presence control transistor 2SC1815L(BL)	Q101, 201, 301, 401	4	2SC2458L(BL), 2SC2784(K) or (E)
Zener diode EQA02-09 (SA)	D1	1	MZ309, RD10E(B1), HZ9(C2)
Silicon diode DS135(D)	D2	1	ERB12(02)
Zener diode RD5.1E(B2)	D151, 351	2	MTZ5.1(B), EQA02-05(EF)
EQUALIZER CONTROL			
LED	LED1 (S1)	1	
LED	LED2 (S2)	1	

CIRCUIT FUNCTION DIAGRAM

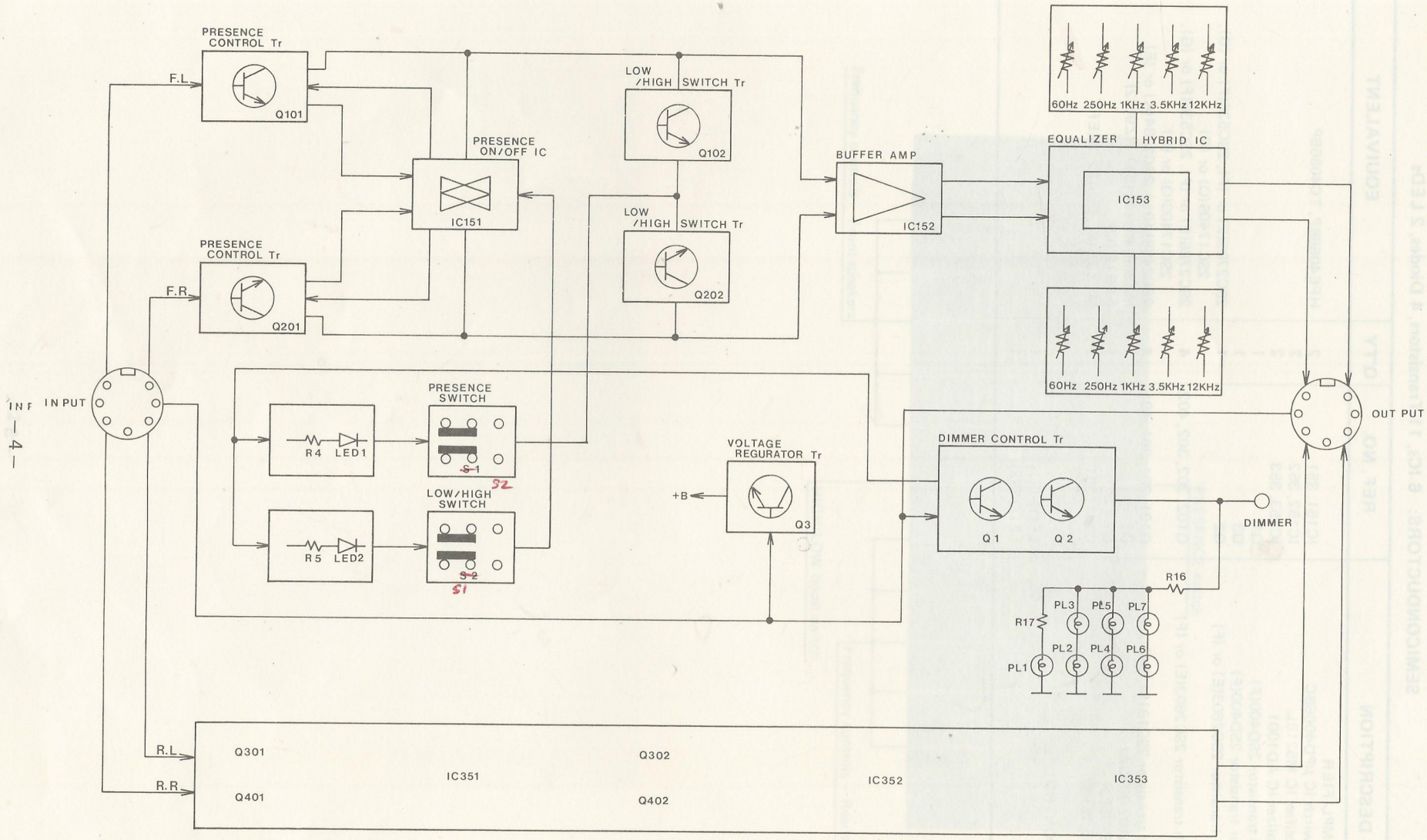

WIRING LAYOUT

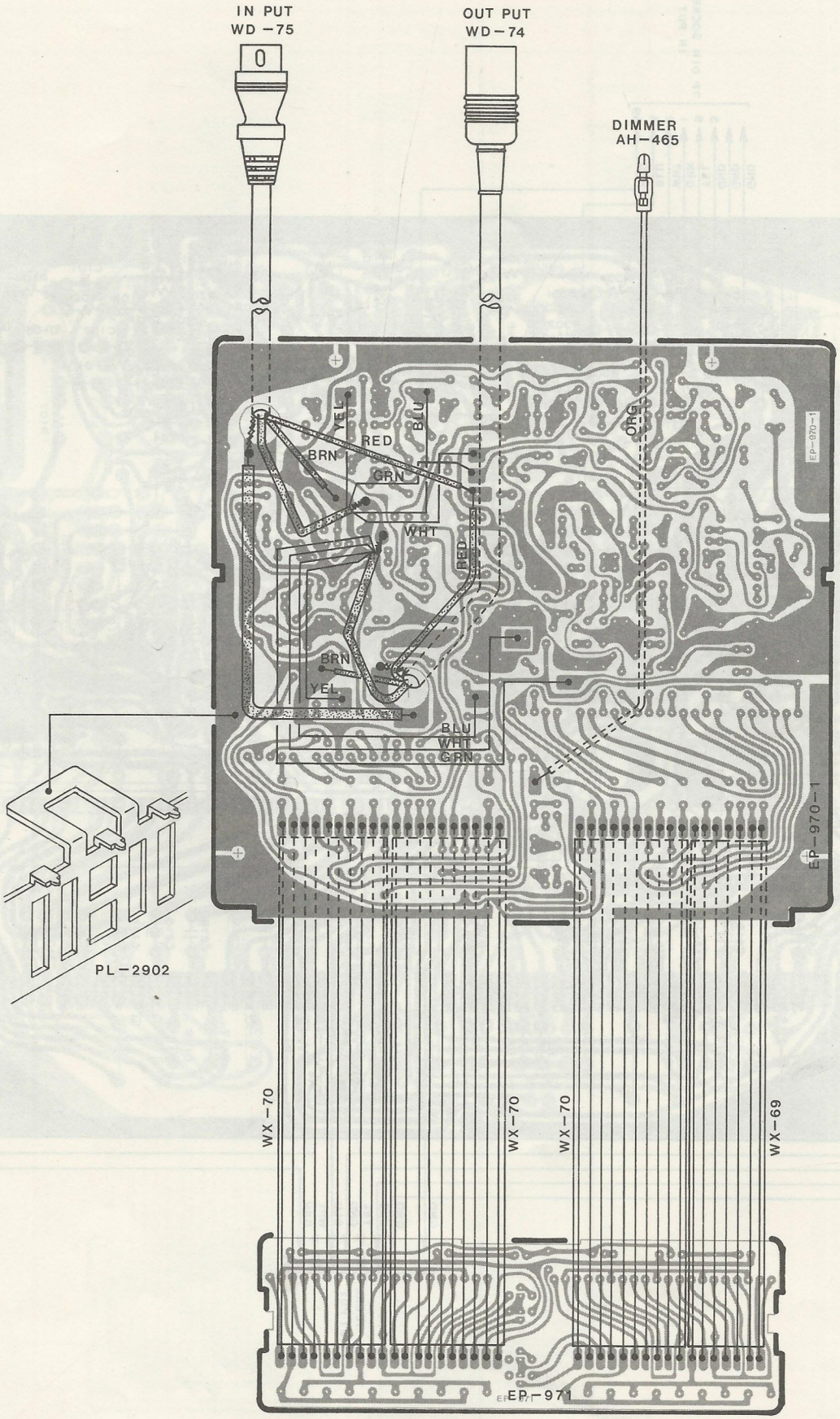

WIRING LAYOUT

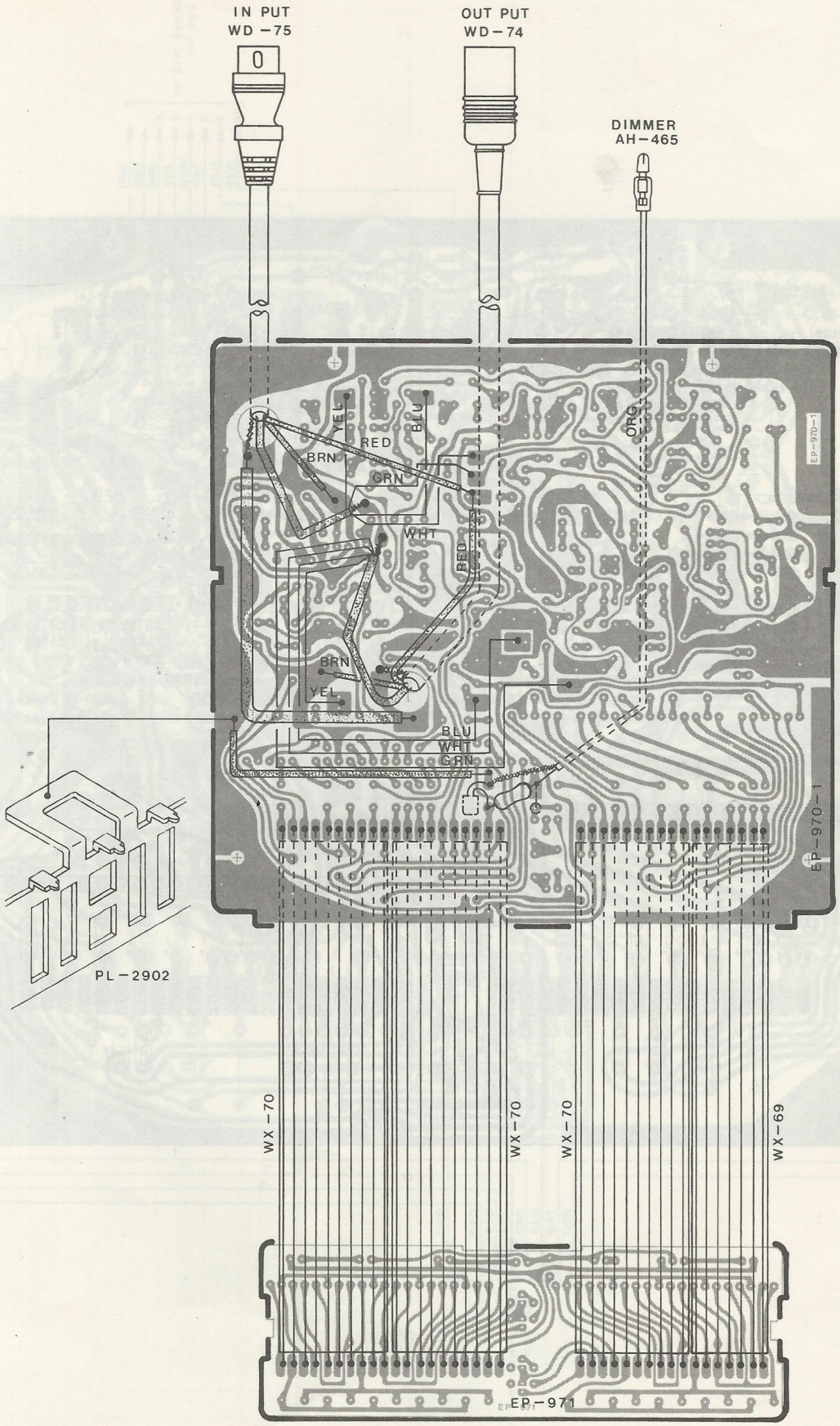

This part is applicable to the unit with serial number of 508000601 onwards.

EQUALIZER AMPLIFIER CIRCUIT BOARD COMPONENT LOCATION GUIDE

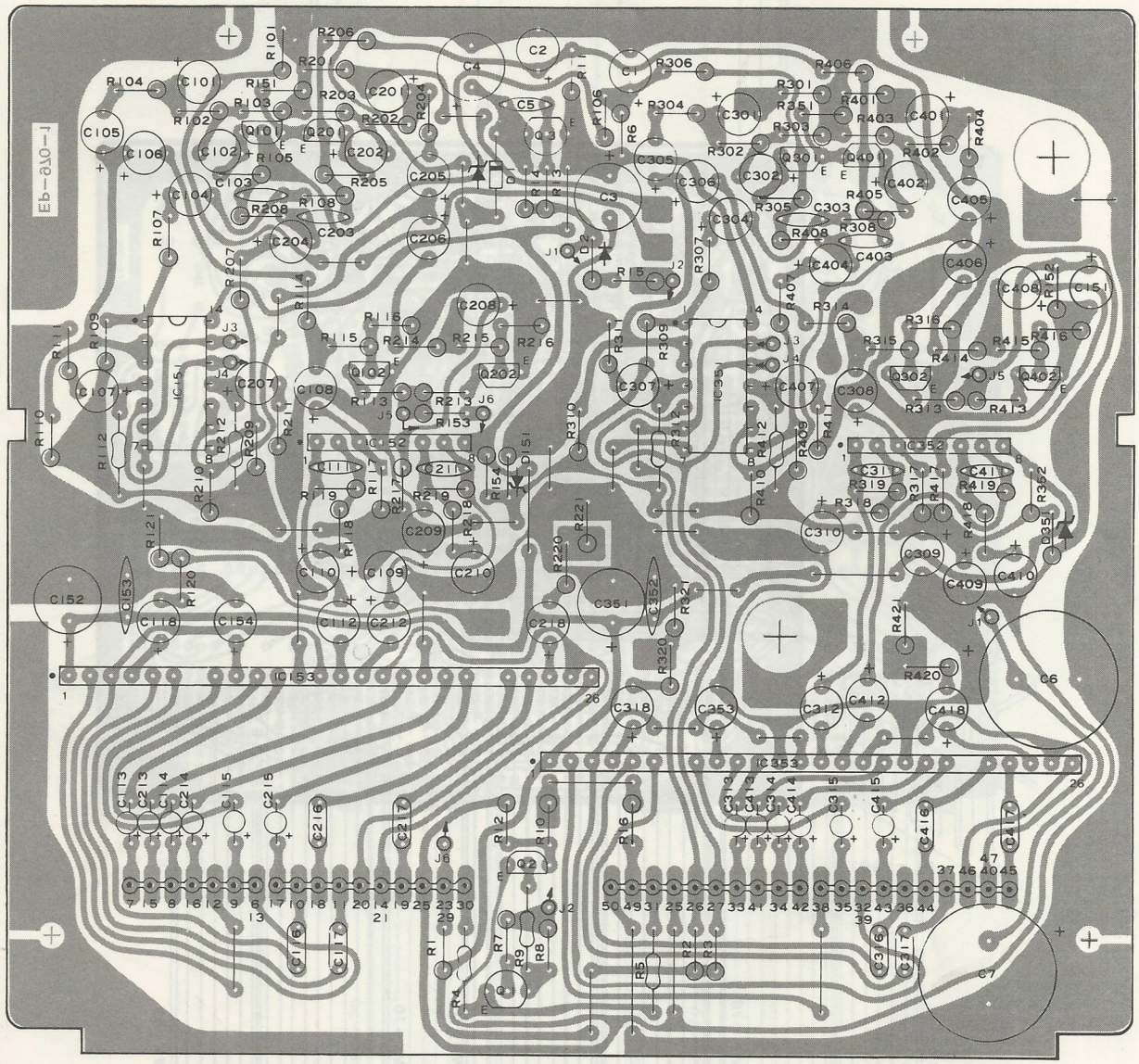

TOP VIEW

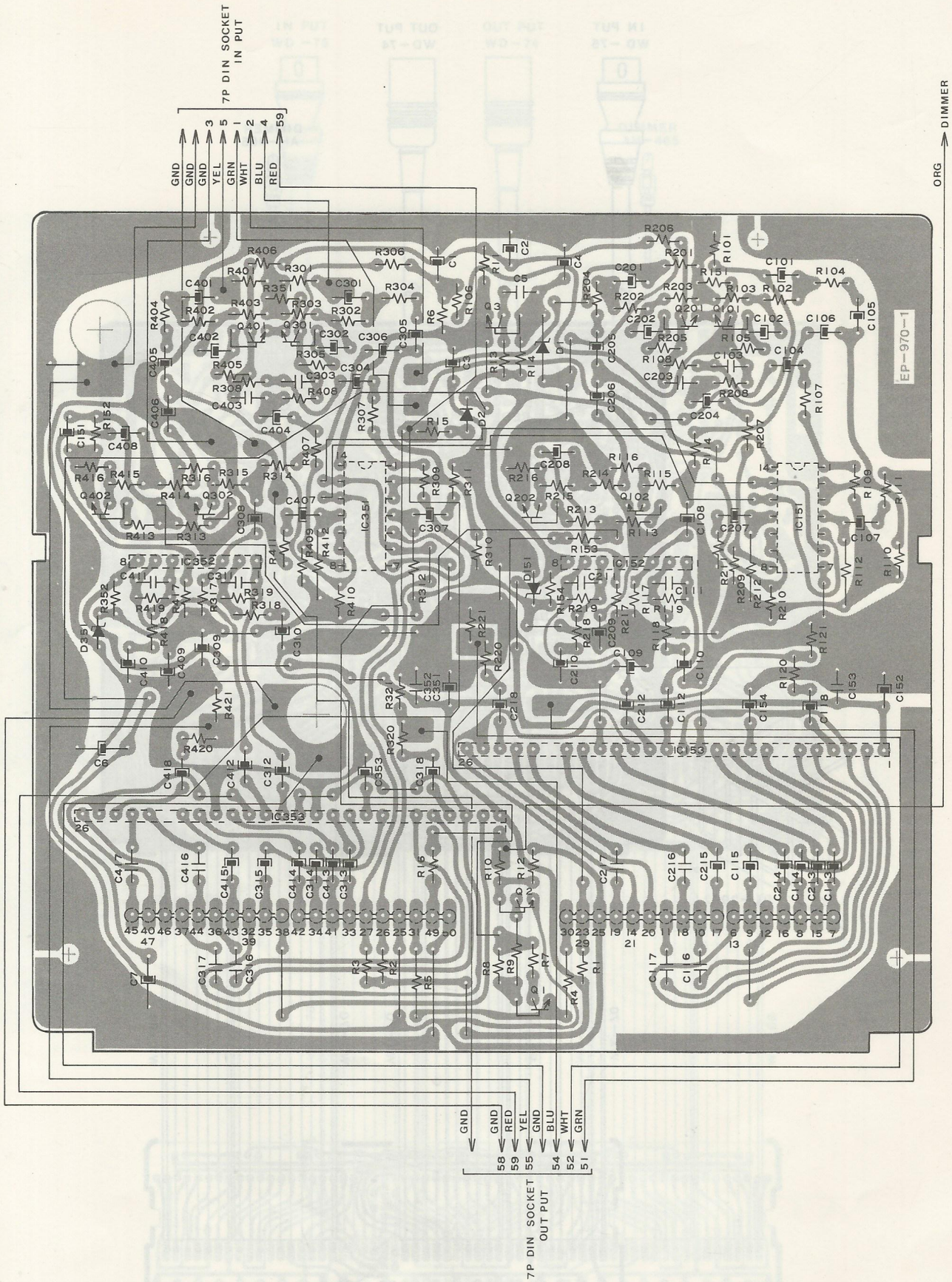
7P DIN SOCKET IN PUT
GND
GND
GND
YEL
GRN
WHT
BLU
RED
3
5
1
2
4
59
ORG
DIMMER
EP-970-1
7P DIN SOCKET OUT PUT
GND
GND
RED
YEL
GND
BLU
WHT
GRN
58
59
55
54
52
51

BOTTOM VIEW

Ref. No. 24 AAP-95 EQUALIZER AMPLIFIER CIRCUIT BOARD ASSEMBLY PARTS LIST

Ref. No.	Description					Part No.
–	Equalizer printed circuit board					EP-970-1
C1, 2, 109, 152, 209, 309, 351, 409	Electrolytic capacitor	100μF	10V			ECC
C3, 4	Electrolytic capacitor	220μF	10V			ECC
C5	Monolithic capacitor	0.01μF	25V	SR	±20%	ECC
C6, 7	Electrolytic capacitor	2200μF	16V			ECC
* C8	Electrolytic capacitor	220μF	16V			ECC
C101, 151, 201, 301, 401	Electrolytic capacitor	4.7μF	25V			ECC
C102, 202, 302, 402	Electrolytic capacitor	0.22μF	50V			ECC
C103, 203, 303, 403	Monolithic capacitor	0.015μF	25V	SR	±20%	ECC
C104, 105, 106, 107, 108, 204, 205, 206, 207, 208, 304, 305, 306, 307, 308, 404, 405, 406, 407, 408	Electrolytic capacitor	1μF	50V			ECC
C110, 118, 154, 210, 218, 310, 318, 353, 410, 418	Electrolytic capacitor	10μF	16V			ECC
C111, 211, 311, 411	Ceramic capacitor	47pF	25V	SL	±10%	ECC
C112, 212, 312, 412	Electrolytic capacitor	2.2μF	50V			ECC
C113, 213, 313, 413	Tantalum electrolytic capacitor	3.3μF	16V		±10%	ECC
C114, 214, 314, 414	Tantalum electrolytic capacitor	0.68μF	16V		±10%	ECC
C115, 215, 315, 415	Tantalum electrolytic capacitor	0.15μF	16V		±10%	ECC
C116, 216, 316, 416	Polyester film capacitor	0.047μF	50V		±10%	ECC
C117, 217, 317, 417	Polyester film capacitor	0.012μF	50V		±10%	ECC
C153, 352	Monolithic capacitor	0.1μF	25V	SR	±20%	ECC
D1	Zener diode EQA02-09(SA) or equivalent					ETD
D2	Diode DS135(D) or equivalent					ETD
D151, 351	Zener diode RD5.1E(B2) or equivalent					ETD
IC151, 351	Quad bilateral switch IC μPD4066BC					ETI-104
IC152, 352	Operational amplifier IC M5218L					ETI-107
IC153, 353	5ch graphic equalizer IC AD1001					ETI-147
Q1, 3	Transistor 2SD400(F) or equivalent					ETTD
Q2, 102, 202, 302, 402	Transistor 2SC2603(F) or equivalent					ETTC
Q101, 201, 301, 401	Transistor 2SC1815L(BL) or equivalent					ETTC
R1	Carbon film resistor	8.2k ohm	1/4W		±5%	ECR
R2, 3, 10, 12, 102, 104, 121, 202, 204, 221, 302, 304, 321, 402, 404, 421	Carbon film resistor	10k ohm	1/4W		±5%	ECR
R4, 5	Carbon film resistor	680 ohm	1/4W		±5%	ECR
R6, 11	Carbon film resistor	820 ohm	1/4W		±5%	ECR
R7, 13	Carbon film resistor	4.7 ohm	1/4W		±5%	ECR
R8, 9, 103, 203, 303, 403	Carbon film resistor	1k ohm	1/4W		±5%	ECR
R14, 106, 206, 306, 406	Carbon film resistor	1.5k ohm	1/4W		±5%	ECR
R15	Carbon film resistor	10 ohm	1/4W		±5%	ECR
R16	Metal film resistor	33 ohm	1W		±5%	ECR
R101, 113, 117, 201, 213, 217, 301, 313, 317, 401, 413, 417	Carbon film resistor	47k ohm	1/4W		±5%	ECR
R105, 205, 305, 405	Carbon film resistor	680k ohm	1/4W		±5%	ECR
R107, 114, 119, 152, 207, 214, 219, 307, 314, 319, 407, 414, 419	Carbon film resistor	22k ohm	1/4W		±5%	ECR
R108, 208, 308, 408	Carbon film resistor	3.9k ohm	1/4W		±5%	ECR
R109, 110, 112, 209, 210, 212, 309, 310, 312, 409, 410, 412	Carbon film resistor	27k ohm	1/4W		±5%	ECR
R111, 211, 311, 411	Carbon film resistor	33k ohm	1/4W		±5%	ECR
R115, 215, 315, 415	Carbon film resistor	4.7k ohm	1/4W		±5%	ECR
R116, 216, 316, 416	Carbon film resistor	100k ohm	1/4W		±5%	ECR
R118, 218, 318, 418	Carbon film resistor	5.6k ohm	1/4W		±5%	ECR
R120, 220, 320, 420	Carbon film resistor	560 ohm	1/4W		±5%	ECR
R151, 351	Carbon film resistor	270 ohm	1/4W		±5%	ECR
R153	Carbon film resistor	56k ohm	1/4W		±5%	ECR
R154, 352	Carbon film resistor	2.7k ohm	1/4W		±5%	ECR
–	Flat cable (7 lead wire)					WX-69
–	Flat cable (10 lead wire)					WX-70

* Ref. No. C8 is used for the unit with serial number of 508000601 onwards.

EXPLODED VIEW

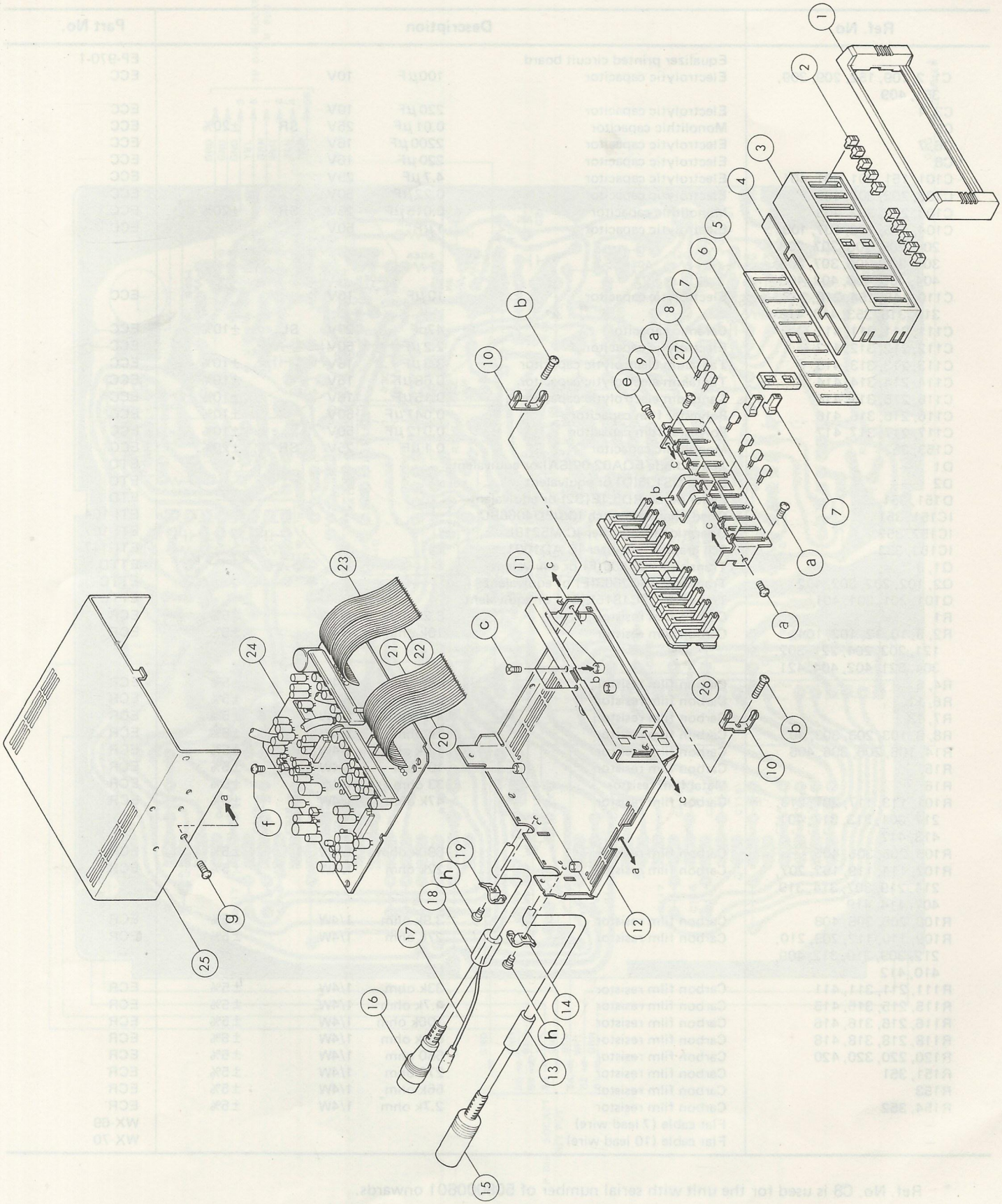

MECHANICAL PARTS LIST

Ref No.	Description	Part No.
1	Trim	MP-1498X3
2	Tone control knob	MP-1701X3
3	Nosepiece ass'y	AMM-47
	Nosepiece	MP-1699X5
	Screen	MP-1976
4	Diffraction sheet	PP-552
5	Shading cloth	PN-697
6	Sponge	PN-698
7	Button set	AMM-46
	Button	MP-1977
	Lenz	MP-1978
8	Pilot lamp	EIL-79
9	Front chassis	PL-2902
10	Trim holder	PL-2439
* 10	Trim holder	AA-741
11	Spacer	CC-1238
12	Bottom case	AMK-7
13	Tube	WTB-6-50
14	Cord clamp	PL-2443
15	7P DIN socket with wire	WD-74
16	7P DIN plug with wire	WD-75
17	Dimmer cord	AH-465
18	Tube	WTB-7-50
19	Cord clamp	PL-2327
20	Flat cable	WX-69
21	Flat cable	WX-70
22	Flat cable	WX-70
23	Flat cable	WX-70
24	Equalizer amplifier PCB ass'y	AAP-95
25	Top case	PL-2441
26	Equalizer control PCB ass'y	AAP-96
27	Tube	WTI-1-10
a	Pan head screw 2 x 3	006203
b	Pan head screw 4 x 12	006412
c	Flush head screw 2 x 6 (precision type)	076206
e	Flush head screw 2 x 4	002204
f	Pan head screw 3 x 4	006304
g	Bind tapping screw 3 x 6 (black)	0883062K
h	Pan head tapping screw 3 x 5	0863052

* Ref. No. 10 AA-741 is used for the unit with serial number of 508000601 onwards.

EQUALIZER CONTROL CIRCUIT BOARD COMPONENT LOCATION GUIDE

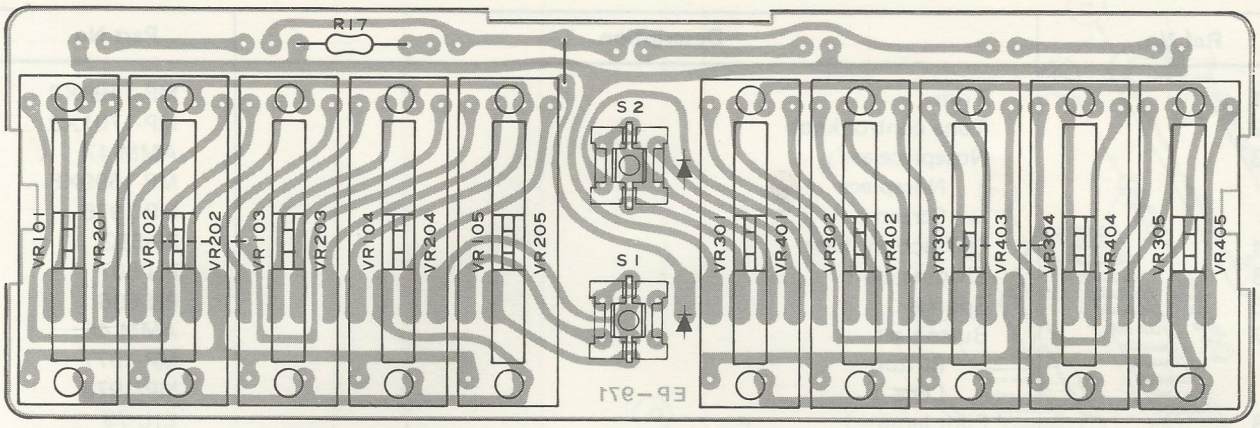

TOP VIEW

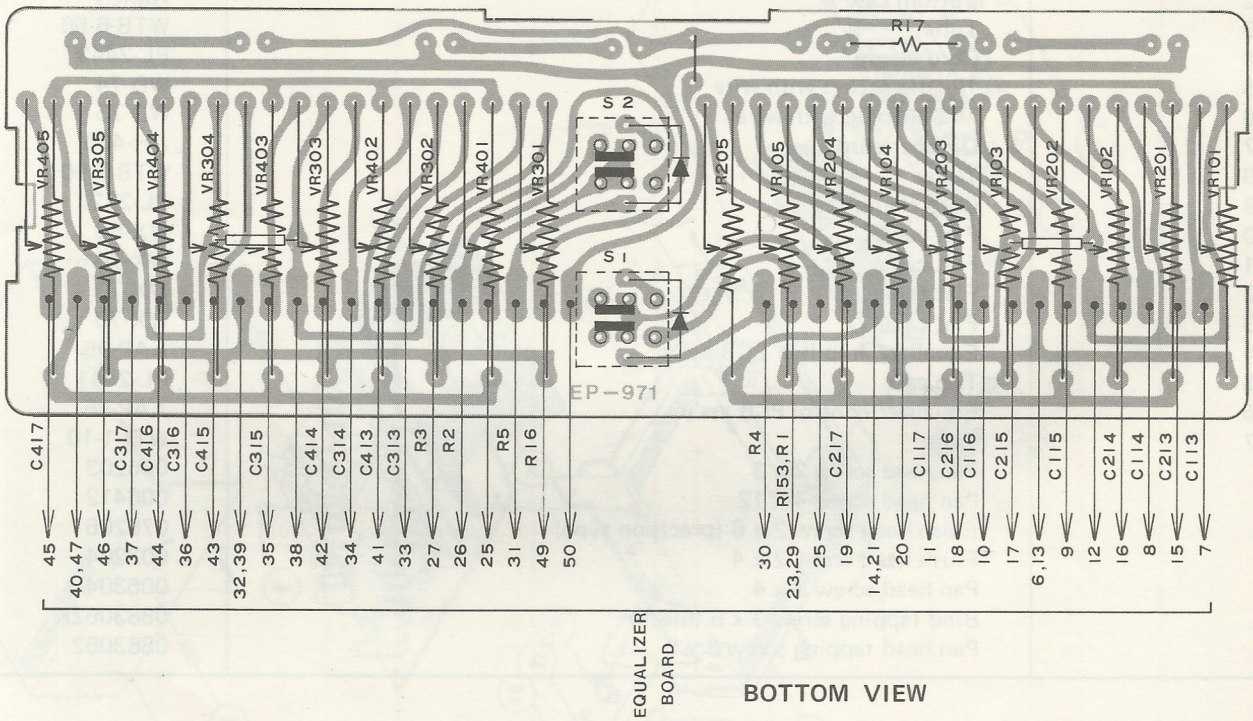

BOTTOM VIEW

Ref. No. 26 AAP-96 EQUALIZER CONTROL CIRCUIT BOARD ASSEMBLY PARTS LIST

Ref. No.	Description			Part No.
—	Equalizer control printed circuit board			EP-971
R17	Carbon film resistor	180 ohm	1/4W ±5%	ECR
S1 (LED1)	Push lock switch — Low/High selector			ESS-254
S2 (LED2)	Push lock switch — Presence			ESS-255
VR101, 102, 103, 104, 105, 201, 202, 203, 204, 205, 301, 302, 303, 304, 305, 401, 402, 403, 404, 405	Variable resistor	20k ohm	W	ECRV-392

ACCESSORY PARTS LIST

DESCRIPTION	Q'TY	PART NO.
Dimmer cord set	1	AH-563
Screw kit	1	AS-47
Contains;		
Hexagon nut D5	1	020540
Hexagon nut D4	2	023440
SEMS hexagon screw 4 x 10	1	0944010K
SEMS hexagon screw 5 x 16	1	0945016
SEMS hexagon screw 4 x 12	2	0944012K
Spring washer	1	0115210
Plain washer D5	1	010508
Hexagon tapping screw 5 x 16	1	0885161
Set screw 3 x 6	8	096306K
Instruction book	1	HPB-682
Warranty card	1	HPC-204
Bracket	1	PL-2551
Supporting strap	1	PP-159

SCHEMATIC DIAGRAM

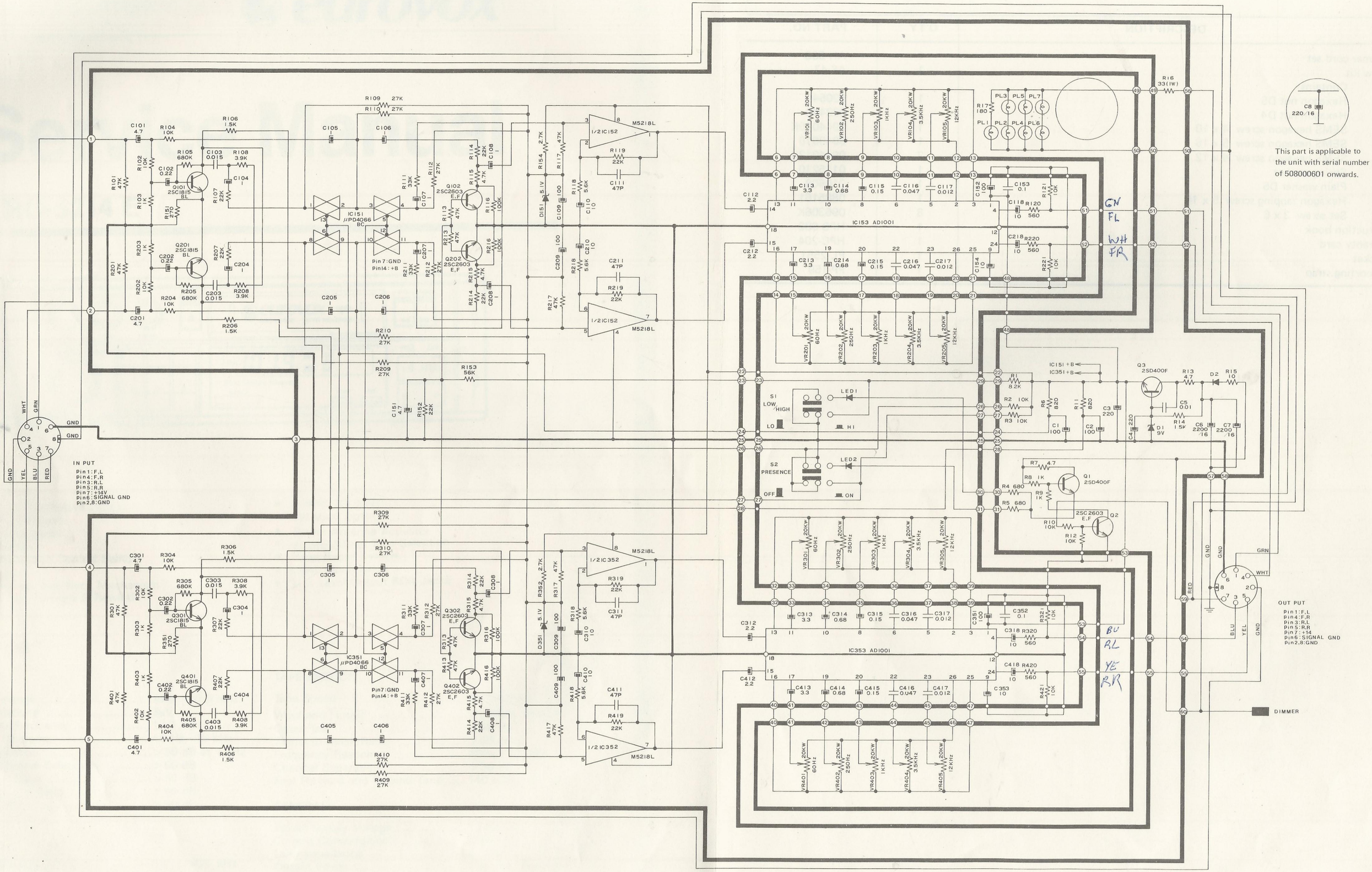

This part is applicable to the unit with serial number of 508000601 onwards.