# INSTRUCTIONS FOR FITTING MOTOR WITH TRANSISTORISED SPEED REGULATOR.

## TO MODELS EL 3300 EL 3301/00.

Parts Required.

| Description. | Code Number. |
|---|---|
| Motor | 4822.194.00239 |
| Printed board | 4822.194.00257 |
| Switch SK3 | 4822.175.01514 |

a. Detach the complete cabinet from the apparatus.
b. Remove the old motor and switch.
c. Disconnect the red wire, running from the switch to points 1-2 of BU2.
d. Two wires are then left, a blue one coming from the print (R36) and a grey one coming from the battery terminal.
e. Remove the indicator with the flat spring, which is rivetted or secured by an M2 screw.
f. Ream the freed hole in the chassis to 3 mm; do the same to the flat spring.
g. Secure the motor print with a 2.6x8 screw, next to the flywheel underneath the indicator, Also secure the flat spring of the indicator with this screw, see fig. 1.
h. Fit a soldering tag under one of the screws of the flywheel bracket and under one of the screws of the motor screening, see Fig. 1.
i. Mount the switch with an M2x12 screw.
j. Run the wire from the print to the switch along the chassis and secure it by means of the two soldering tags.
k. Then connect the switch and the motor as indicated in Fig. 2.
l. Adjustment of the motor speed, see fig. 3.

Speed check.

This speed can be adjusted with R41, fig. 3.
Since it is impossible in this way to check the speed with the standard test tape, the following method should be applied.
One of the sides of a cassette is removed.
This can be done easily with the aid of a knife and a file.
All burrs should be removed from the opening.
The tape can be pulled outside through this opening.
Completely remove the apparatus from the cabinet and insert the cassette.
Position a stroboscope disc (code number A9 407 30/50 for 50 c/s and A9 407 30/60 for 60 c/s) next to the apparatus and lead the tape past this disc, see Fig. 3.
The speed can then be adjusted by turning R41 with the aid of a small screwdriver.

NOTE:- Tape Stobe type HY139 88 (available from Philips Service Centres) can be used in lieu of A9 403 30/50.

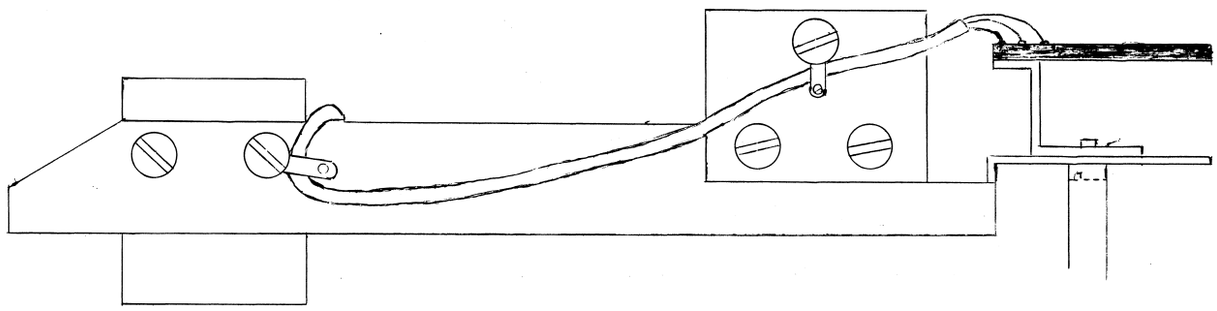

Fig. 1

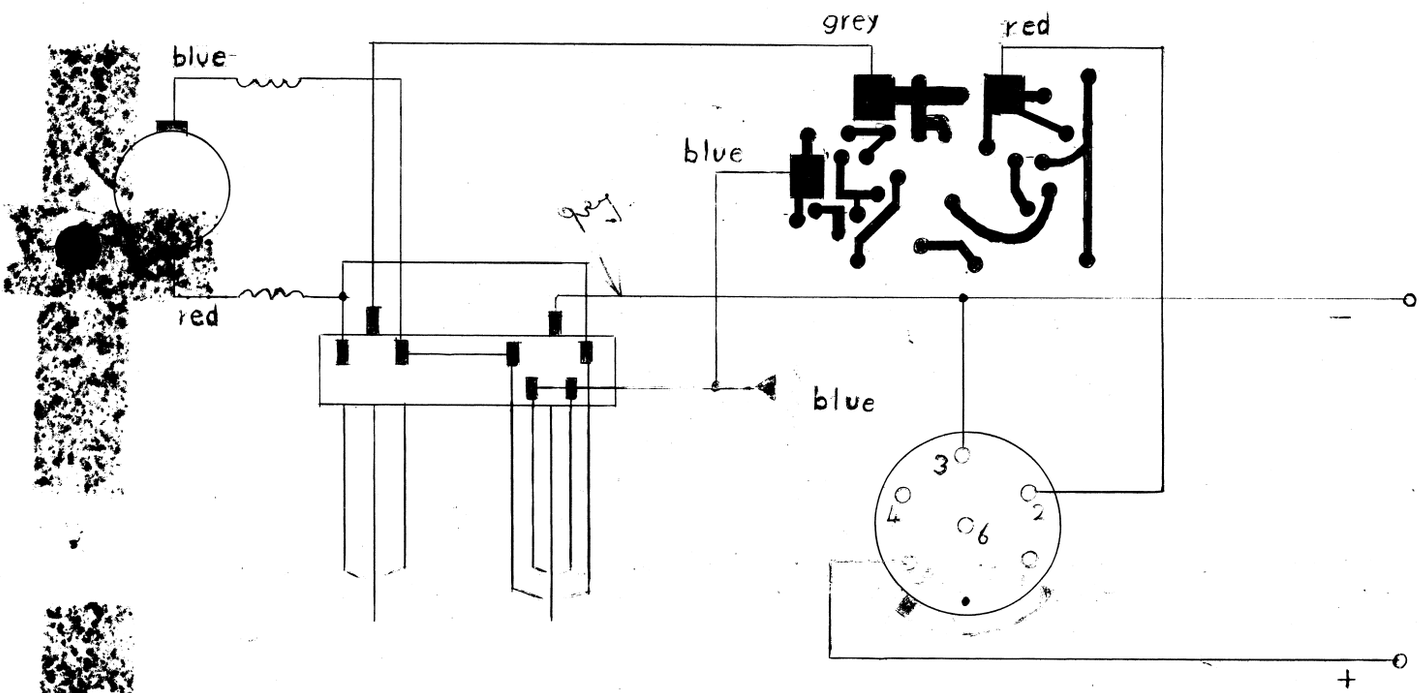


Fig. 2

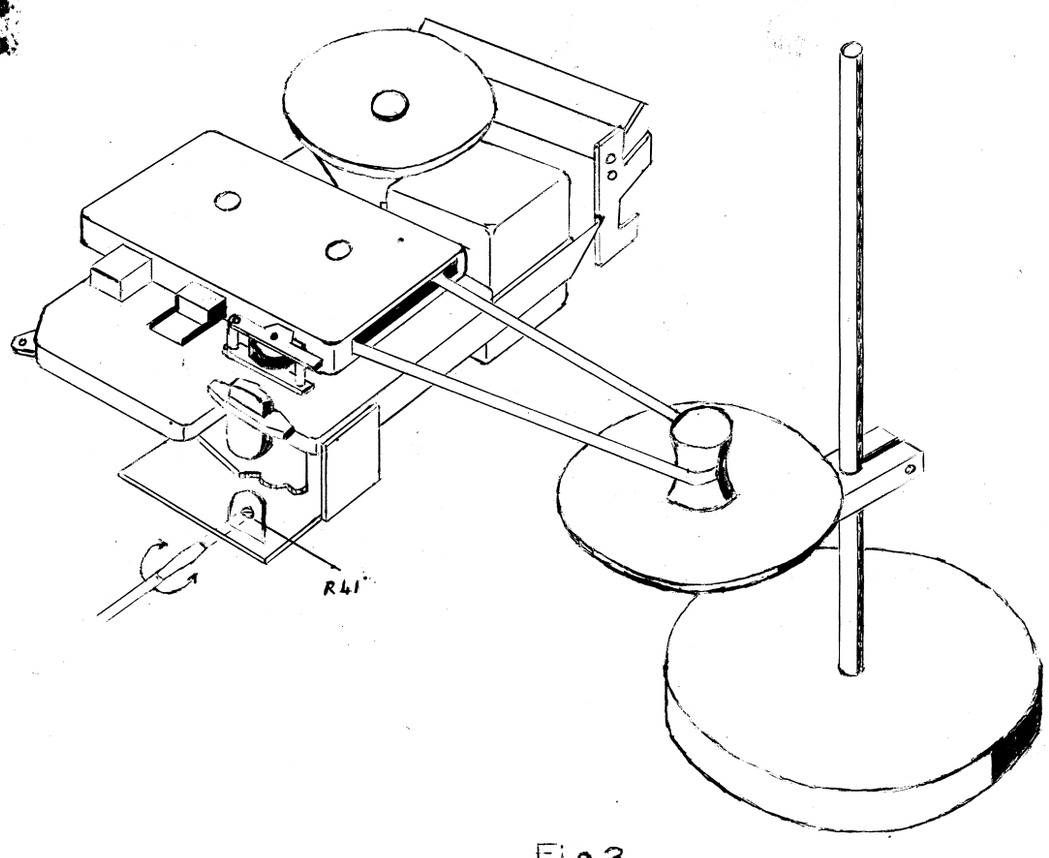


Fig. 3