Clarion

SERVICE MANUAL

Closer Relations through "CLARION SERVICE MANUAL"

MODEL EE-064A•EE-065A

Fabricant: **CLARION CO., LTD.**/Exportations: **CLARION SHOJI CO., LTD.**

3, Kojimachi 5-chome, Chiyoda-ku, Tokyo, 102 Japan Tel. (265) 2931 Telex: J22908, J22152 CLARISHO

Succursales outre-mer:

CLARION SHOJI (EUROPA) G.M.B.H. 2, Rudolf-Diesel-Strasse 6236 Eschborn 2, West Germany. Tel. 06173-61041-42 Telex: 415414

CLARION SHOJI CO., LTD. (U.S.A.) 5500 Rosecrans Ave., Lawndale, Calif., 90260 U.S.A. Tel. 213-973-1100 Telex: 66-4447

CLARION CORPORATION OF AMERICA 5500 Rosecrans Ave., Lawndale, Calif., 90260 U.S.A. Tel. 213-973-1100 Telex: 66-4447

CLARION CORPORATION OF AMERICA, EASTERN DIVISION 411 North Ave., East, Cranford, N.J., 07016 U.S.A. Tel. 201-272-8840 Telex: 13805

CLARION (MALAYSIA) SDN. BHD. 9-1 2 m.s. Bayan Lepas, Penang Malaysia. Tel. 831-106 831-107 Telex: CLAMAC MA40033

CLARION DO BRASIL INDUSTRIA E COMERCIO LTDA. Rua Diogo Moreira 138, Pinheiros 05423 Sao Paulo, SP, Brazil. Tel. 210-5840, 210-4639 Sao Paulo Telex: 3821123

CLARION (HONG KONG) CO., LTD. Rooms 333-335, Star House, 3, Salisbury Road, Tsimshatsui, Kowloon, Hong Kong. Tel. 3-695393 Telex: SIERAHX74922

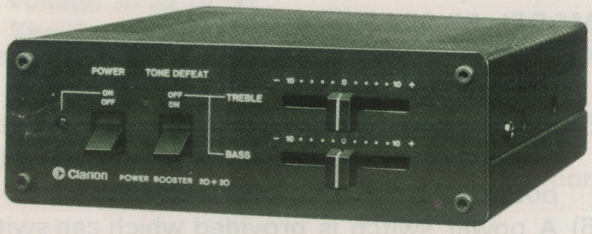

MODEL EE-064A

MODEL EE-065A

■SPECIFICATIONS:

	MODEL EE-064A	MODEL EE-065A
Power output (4Ω Load)	More than 12W×2 at 1KHz for 10% distortion More than 18W×2 (Typ 20W×2) for Max output ……4Ω Load	More than 12W×2 at 1KHz for 10% distortion More than 18W×2 (Typ 20W×2) for Max output ……4Ω Load
Cross talk	More than 40dB at 1KHz 4W …Tone defeat : off	More than 40dB at 1KHz 4W
Frequency characteristic	40Hz~15KHz(−3dB), 0dB=1KHz at 1W TONE: high 6±3dB(Boost) −10±5dB(Cut) 10KHz +3±5dB Low 8±5dB(Boost) −10±5dB(Cut) high : 10KHz Low : 100Hz	100Hz +3±3dB 10KHz +3±5dB 0dB=1KHz at 1W
Power band width	70Hz~15KHz at 10W 8% distortion	70Hz~15KHz at 10W 8% distortion
S/N	More than 70dB	More than 70dB
Input sensitivity	More than 9W at 3.0V 1KHz	More than 9W at 3.0V 1KHz
Load impedance	4Ω×2 (or 8Ω×2)	4Ω×2 (or 8Ω×2)
Power supply voltage	DC 14V (10.8~15.6V) negative ground	DC 14V (10.8~15.6V) negative ground

Printed in Japan 298-1960-00

MODEL EE-064A•EE-065A

Fabricant: **CLARION CO., LTD.**/Exportations: **CLARION SHOJI CO., LTD.**
3, Kojimachi 5-chome, Chiyoda-ku, Tokyo, 102 Japan Tel. (265) 2931 Telex: J22908, J22152 CLARISHO
Succursales outre-mer:
CLARION SHOJI(EUROPA)G.M.B.H. 2, Rudolf-Diesel-Strasse 6236 Eschborn 2, West Germany. Tel. 06173-61041-42 Telex: 415414
CLARION SHOJI CO.,LTD.(U.S.A.) 5500 Rosecrans Ave., Lawndale, Calif., 90260 U.S.A. Tel. 213-973-1100 Telex: 66-4447
CLARION CORPORATION OF AMERICA 5500 Rosecrans Ave., Lawndale, Calif., 90260 U.S.A. Tel. 213-973-1100 Telex: 66-4447
CLARION CORPORATION OF AMERICA, EASTERN DIVISION 411 North Ave., East, Cranford, N.J., 07016 U.S.A. Tel. 201-272-8840 Telex: 13805
CLARION (MALAYSIA) SDN. BHD. 9-1 2 m.s. Bayan Lepas, Penang Malaysia. Tel. 831-106 831-107 Telex: CLAMAC MA40033
CLARION DO BRASIL INDUSTRIA E COMERCIO LTDA. Rua Diogo Moreira 138, Pinheiros 05423 Sao Paulo, SP, Brazil. Tel. 210-5840, 210-4639 Sao Paulo Telex: 3821123
CLARION (HONG KONG) CO., LTD. Rooms 333-335, Star House, 3, Salisbury Road, Tsimshatsui, Kowloon, Hong Kong. Tel. 3-695393 Telex: SIERAHX74922

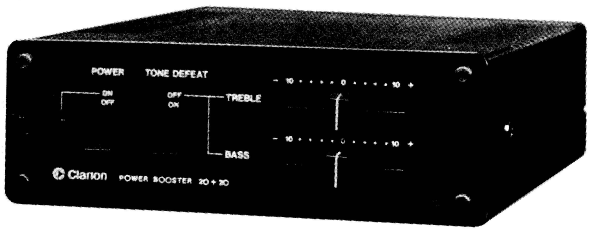

MODEL EE-064 A

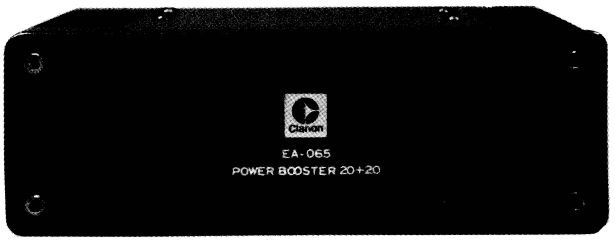

MODEL EE-065A

■SPECIFICATIONS:

	MODEL EE-064A	MODEL EE-065A
Power output (4Ω Load)	More than 12W×2 at 1KHz for 10% distortion More than 18W×2 (Typ 20W×2) for Max output ……4Ω Load	More than 12W×2 at 1KHz for 10% distortion More than 18W×2 (Typ 20W×2) for Max output ……4Ω Load
Cross talk	More than 40dB at 1KHz 4W …Tone defeat : off	More than 40dB at 1KHz 4W
Frequency characteristic	40Hz~15KHz(−3dB), 0dB=1KHz at 1W TONE: high 6±3dB(Boost) −10±5dB(Cut) 10KHz +3±5dB Low 8±5dB(Boost) −10±5dB(Cut) high : 10KHz Low : 100Hz	100Hz +3±3dB 10KHz +3±5dB 0dB=1KHz at 1W
Power band width	70Hz~15KHz at 10W 8% distortion	70Hz~15KHz at 10W 8% distortion
S/N	More than 70dB	More than 70dB
Input sensitivity	More than 9W at 3.0V 1KHz	More than 9W at 3.0V 1KHz
Load impedance	4Ω×2 (or 8Ω×2)	4Ω×2 (or 8Ω×2)
Power supply voltage	DC 14V (10.8~15.6V) negative ground	DC 14V (10.8~15.6V) negative ground

Printed in Japan 298-1960-00

Power consumption	Less than 7A (at max. output)	Less than 7A (at max. output)
Semiconductors	12 transistors, 9 diodes	10 transistors, 7 diodes
Weight	1.5kg (3.3 lbs)	1.45kg (3.2 lbs)
Dimensions	Width 140m/m (5.5")	Width 140m/m (5.5")
	Height 47m/m (1.85")	Height 47m/m (1.85")
	Depth 165m/m (6.5")	Depth 165m/m (6.5")

■COMPONENT VIEW:

	MAIN UNIT	1
	OWNERS GUIDE	1
	WARRANTY CARD	1
300-4976-00	MOUNTING BRACKET	1

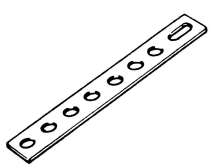

300-5074-00	MOUNTING BRACKET	1

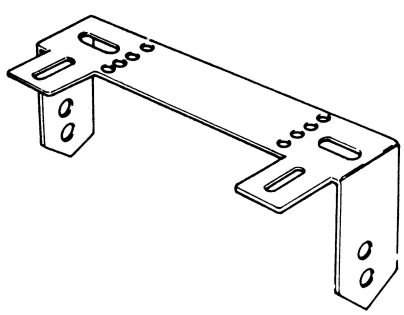

850-1857-00	A-lead	1

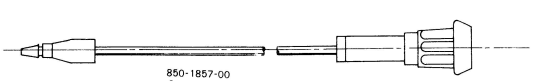

852-5115-00	Extension lead	1

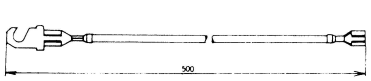

921-6331-01	Parts bag	1

■FEATURES:

Common to EE-064A and EE-065A

1) Output of 20W×2 is given out simply by connecting to conventional sets (radios and stereos).
2) Since an automatic power supply circuit is built in, it is possible to insert a power booster source just as in conventional operation.
3) Since it is for the thin type, it can be installed anywhere.

MODEL EE-064A

4) Favorite sound can be selected since bass and treble circuits are attached.
5) With the tone defeat switch provided, the sound can be amde flat no matter what the position of the bass and treble knobs.
6) A power switch is provided which can switch the booster ON or OFF and turn down the power without modulation of the sound in the main unit.

■WIRING METHOD:

COMMON TO EE-064A AND EE-065A

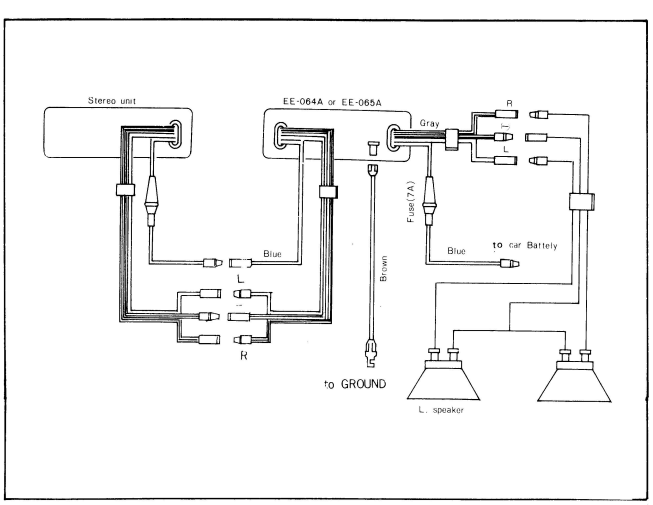

■OPERATION OF AUTOMATIC POWER SUPPLY CIRCUIT:

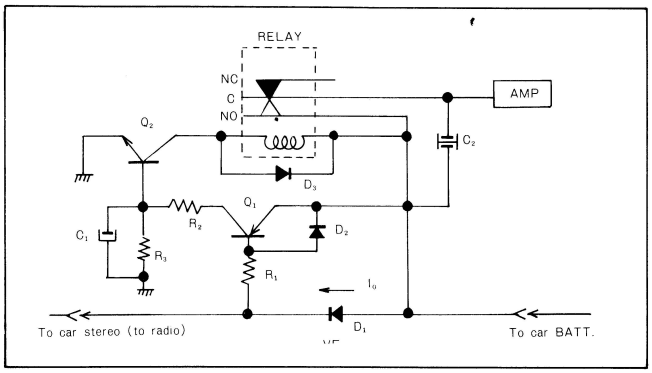

The above is basic circuit.
Operating Method

When ON

1. When the car stereo is turned ON, the car stereo load current is supplied to the car stereo by the power supply via the diode.
2. Current flows to the diode and there is a voltage drop of VF.
3. The Q_1 transistor is excited by VF and Q_1 is turned ON.
4. When Q_1 is ON, a voltage occurs in R_2 and R_3 (current flows), the Q_2 dace is turned ON, and Q_2 is turned on via the relay exciting coil.
5. The voltage is supplied to the power amplifier from the NO contact.

When OFF

1. When the car stereo is turned OFF, VF disappears, Q_1 is turned OFF, the Q_2 dace goes to zero potential and Q_2 isturned OFF.
   Therefore, the voltage supplied to the car stereo becomes ($V_{BATY}-V_F$) which drops 1.1V from 0.8V.
   Since the supply to the car stereo side drops further under such conditions when the voltage drops to 1.8V or less, there are cases of effects (channel change, etc.) on the operation (1.1V from 0.8V) but be careful since these are not faults.

■TROUBLE SHOOTING: (Common to EE-064A and EE-065A)

Note ( ): Parts nomber of MODEL EE-065A

Electrical Circuit (Refer to the Circuit Diagram, actval Wiring Diagram)

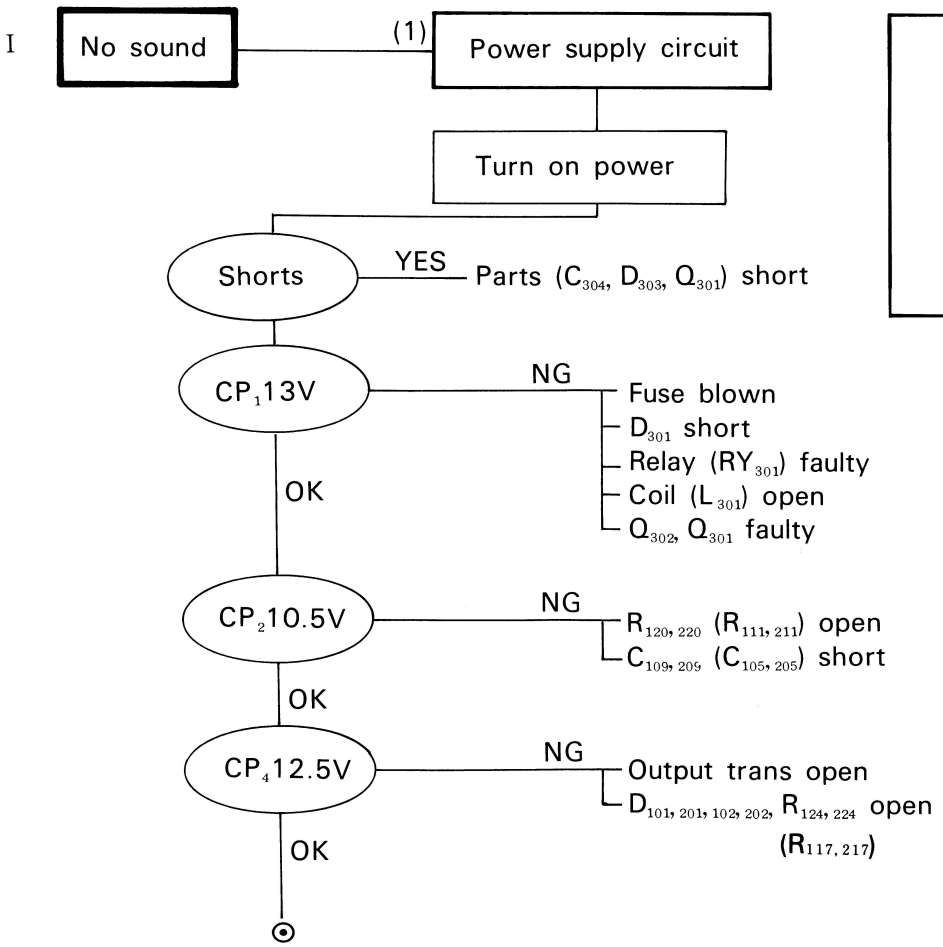

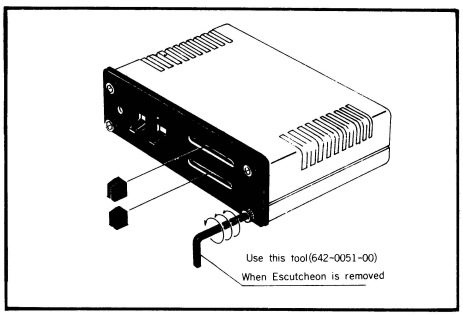

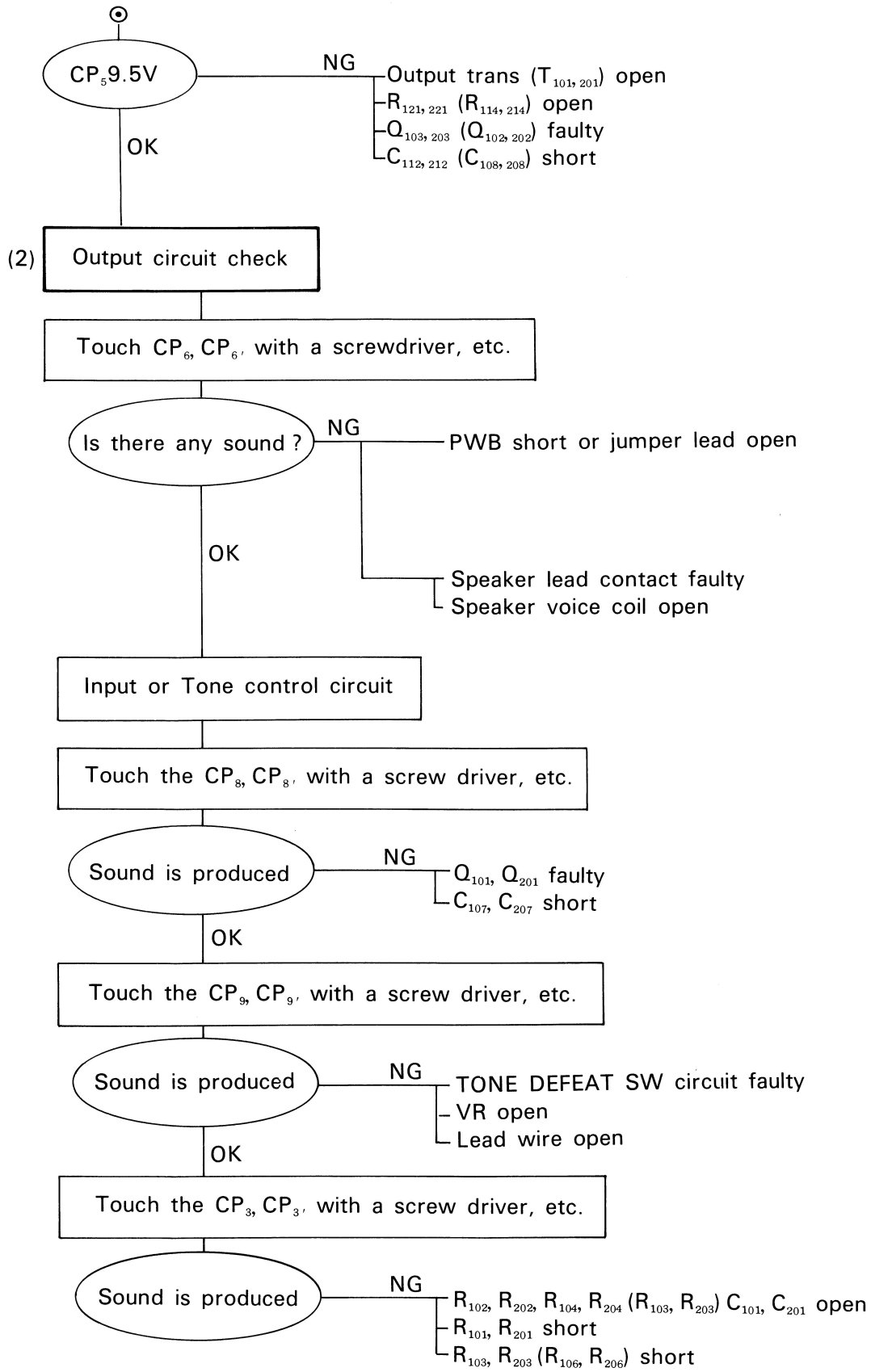

II Sound level is low — (1) Power supply circuit section (see previous section) check

CP2 voltage check — NG (low)
- R_{120}, R_{220} (R_{111}, R_{211}) resistance high
- R_{115}, R_{215} (R_{110}, R_{210}) resistance high
- Leak due to chang in C_{109}, C_{209} (C_{105}, C_{205})

(2) Output circuit section (see previous section) check

Interchange the Lch and Rch at the input of the output circuit

Is the channel with low sound interchanged ?

- No change — R_{119}, R_{219} (R_{113}, R_{213}) resistance low

(3) Driver circuit check

Insert the capacitor (about 10V-100μF) between CP_7, $CP_{7'}$ and earth

Is the change sound level

- Change — C_{110}, C_{210} (C_{106}, C_{206}) capacity down

III Sound is distorted — (Refer to the previous circuit checks)

- C_{108}, C_{208} (C_{104}, C_{204}) deteriorated, reverse polarity
- C_{110}, C_{210}, C_{112}, C_{212} (C_{106}, C_{206}, C_{108}, C_{208}) deteriorated, reverse polarity
- Transistor faulty or deteriorated

IV Oscillates — Oscillation preventing capacitor faulty

- C_{113}, C_{213}, C_{114}, C_{214}, C_{116}, C_{216} (C_{109}, C_{209}, C_{110}, C_{210}, C_{112}, C_{212}) open or capacitor down
- R_{122}, R_{222} (R_{115}, R_{215}) open or resistance high

V Bad separation

- Grounding screws loose
- Grounding lead open

VI Large noise

- (1) Filter capacitor faulty — C_{304} change or capacitor down
- (2) Coupling capacitor faulty — C_{101}, C_{201}, C_{106}, C_{206}, C_{108}, C_{208} (C_{101}, C_{201}, C_{104}, C_{204}) capacitor down

VII Chattering is produced in relay

- C_{303}, C_{302}, C_{301} capacity change or capacity down
- D_{302}, D_{304} faulty

■PRINTED WIRING BOARD:

◎EE-064A

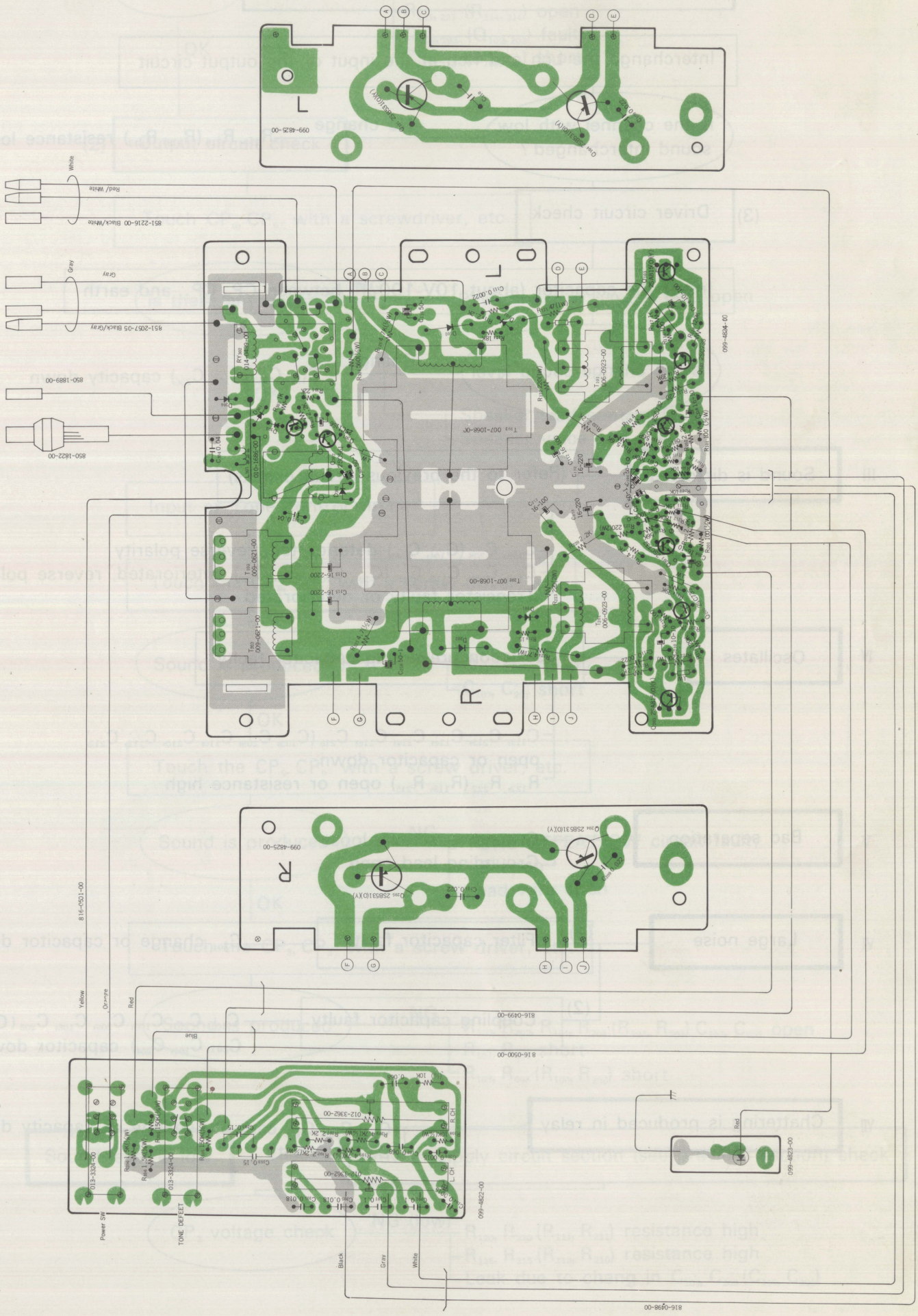

■PRINTED WIRING BOARD:

◎EE-064A

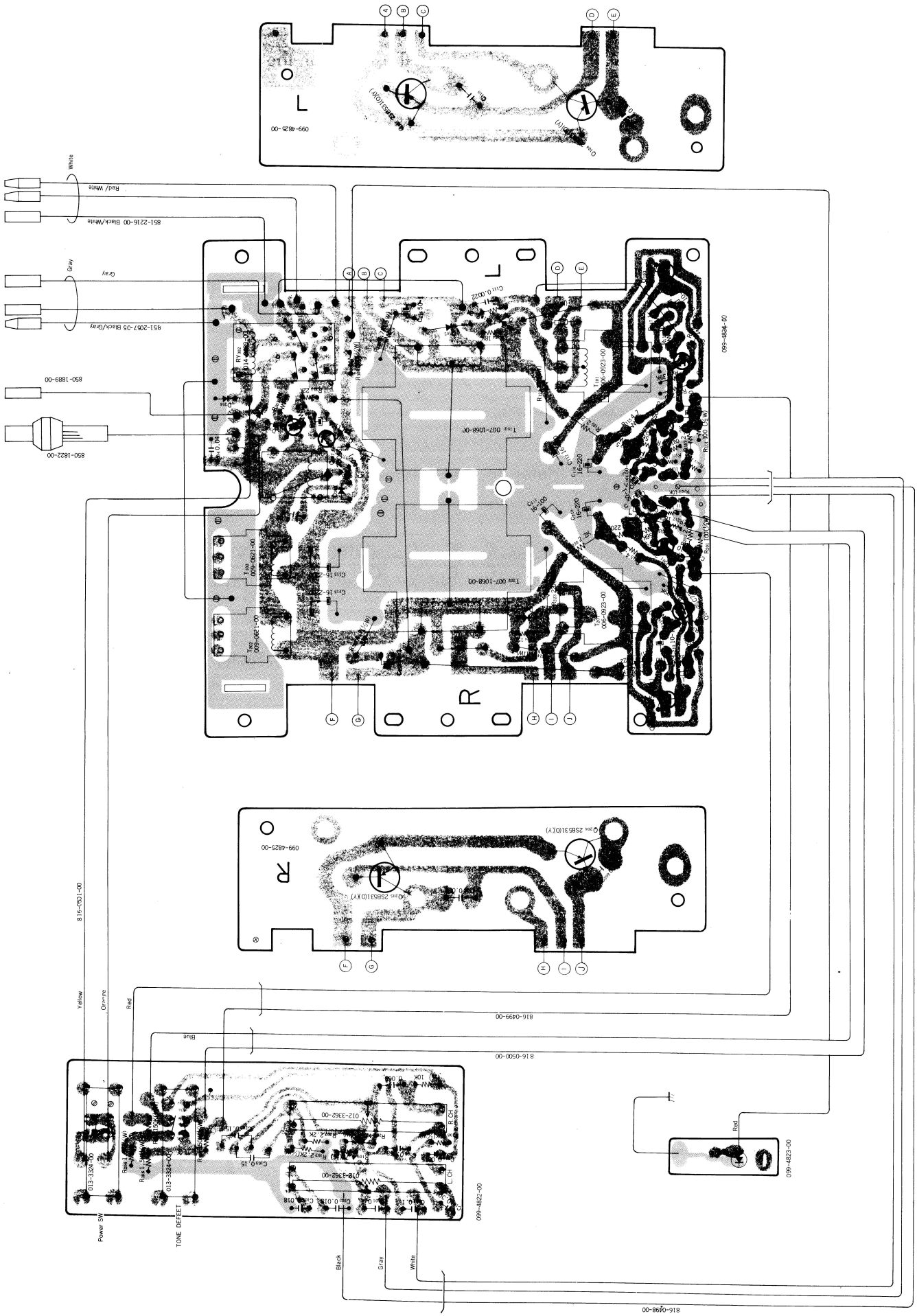

■CIRCUIT DIAGRAM:

◎EE-064A

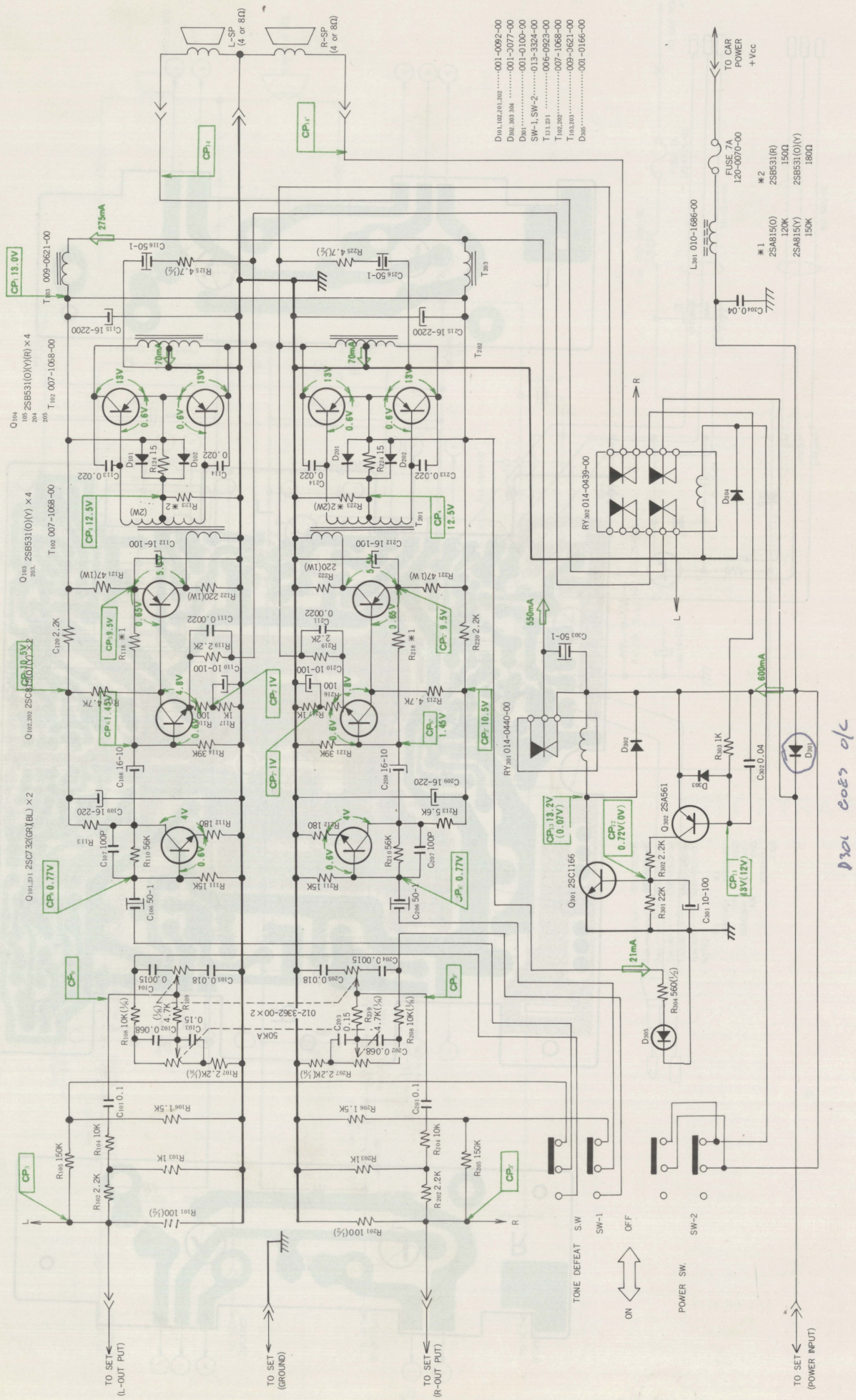

EE-064A
EE-065A

■CIRCUIT DIAGRAM:

◎EE-064A

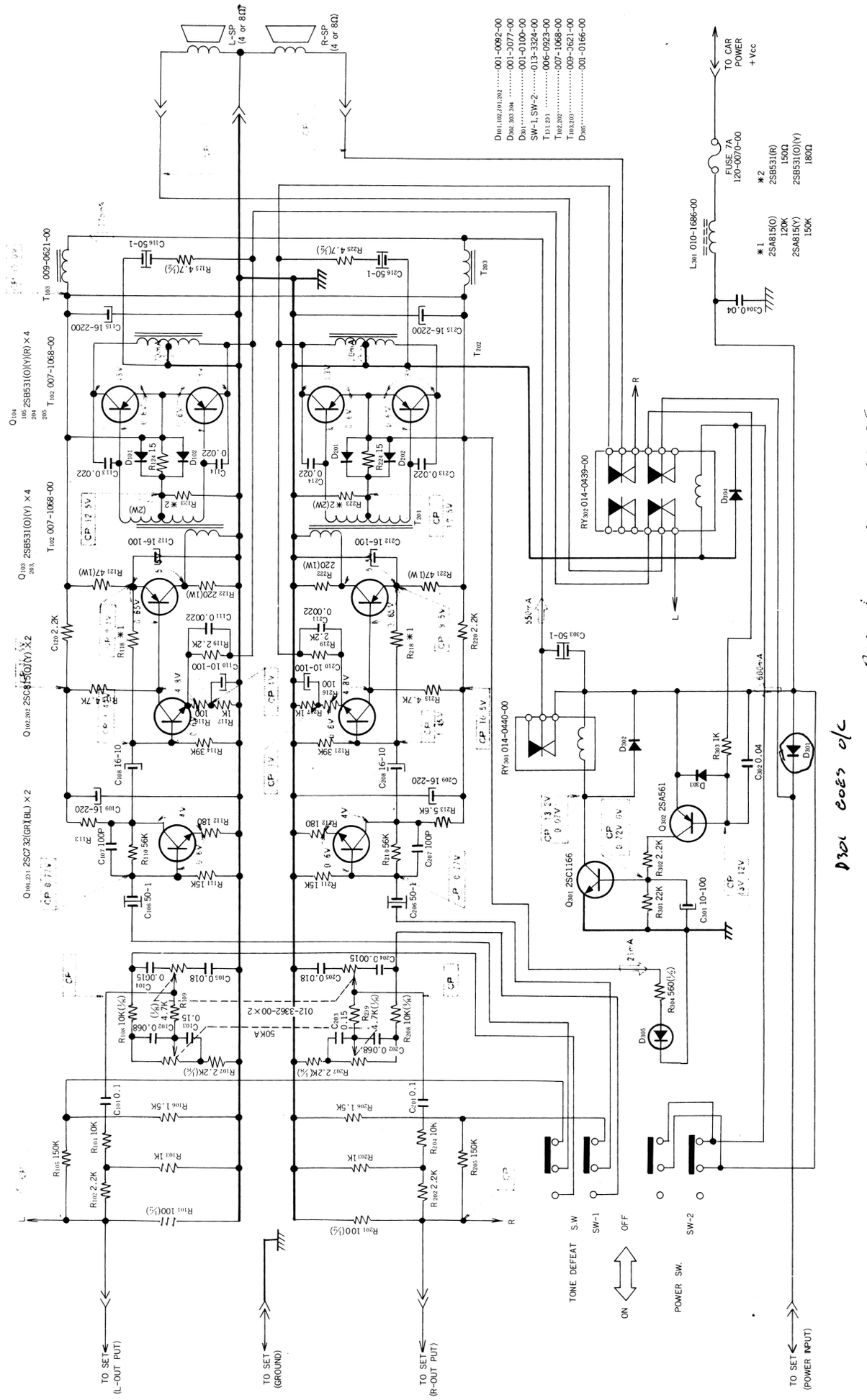

■PRINTED WIRING BOARD:

◎EE-065A

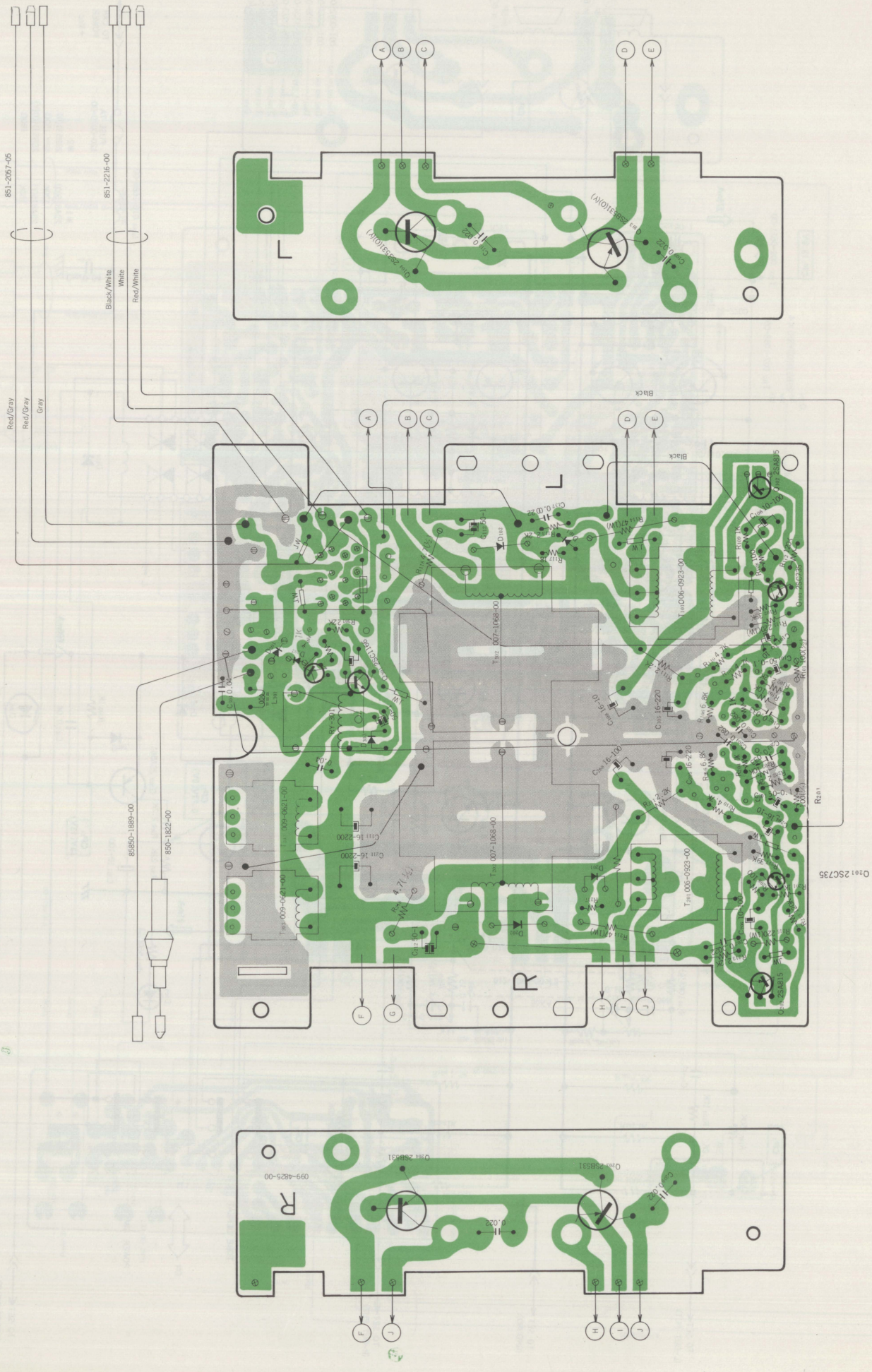

■PRINTED WIRING BOARD:

◎EE-065A

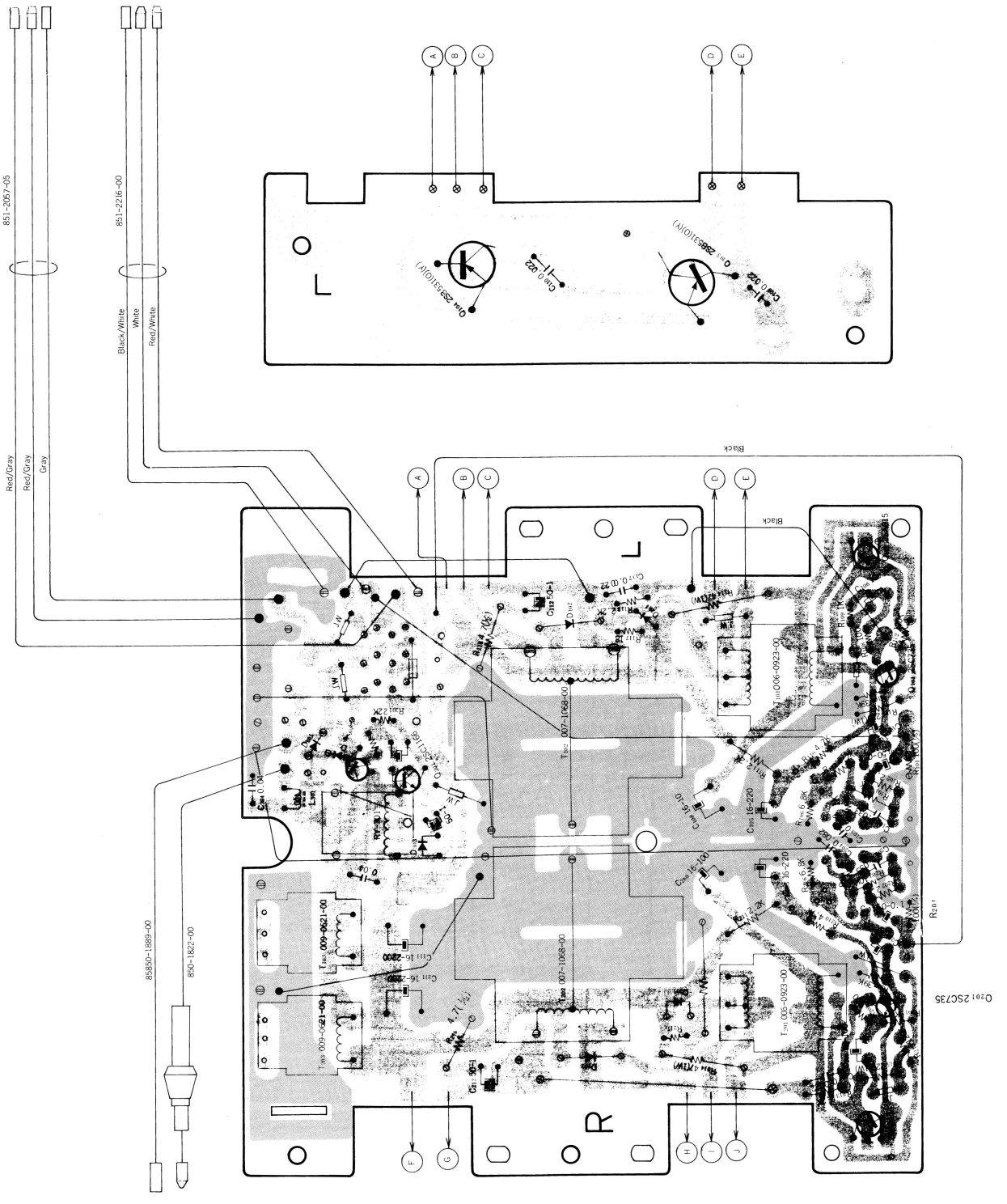

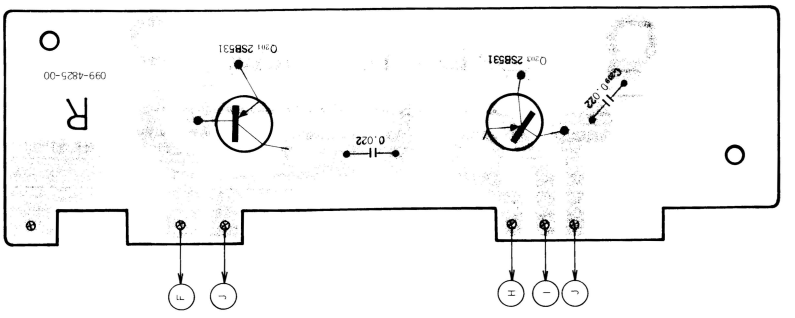

■CIRCUIT DIAGRAM:

◎EE-065A

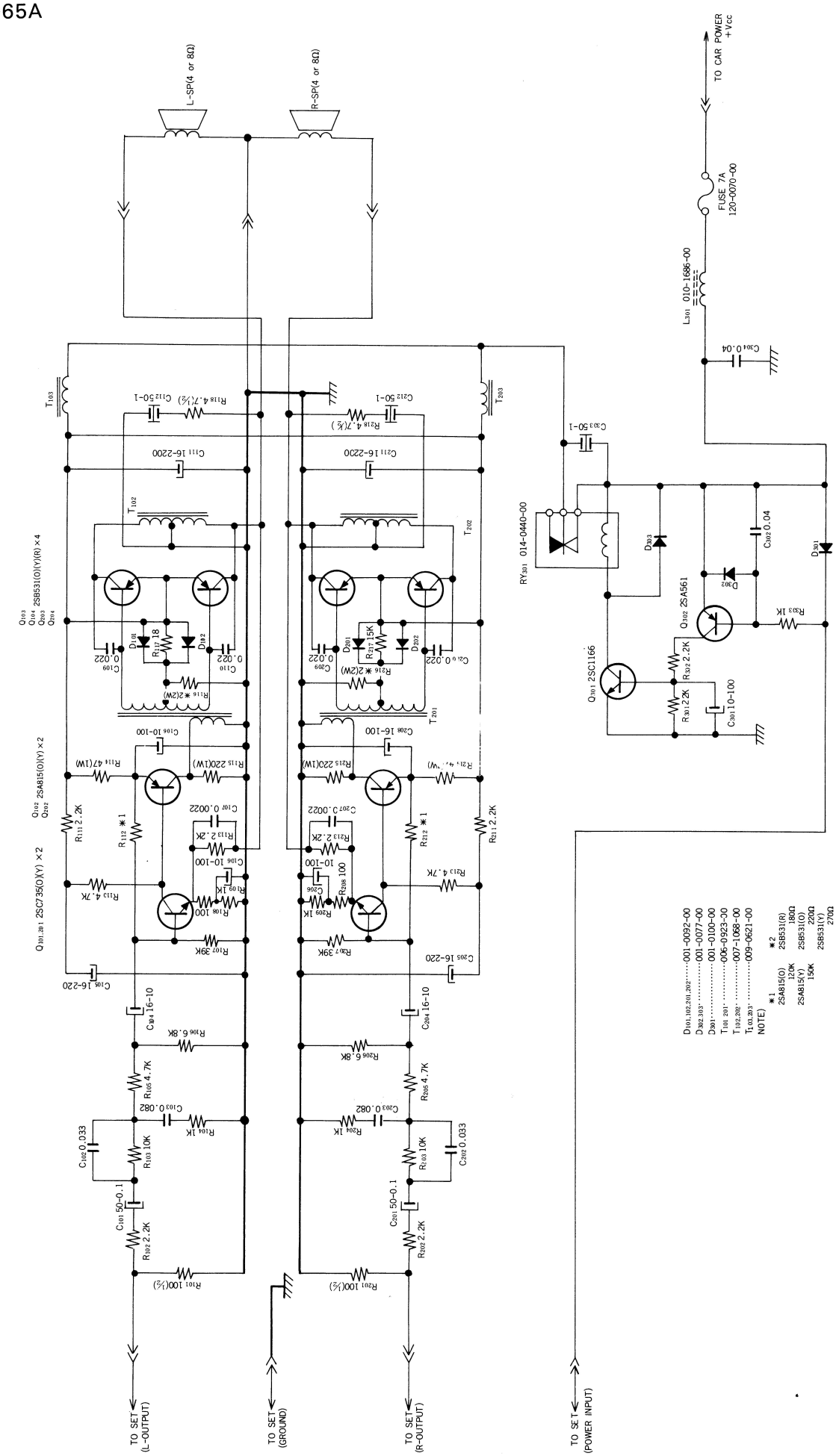

■EXPLODED VIEW:

◎EE-064A

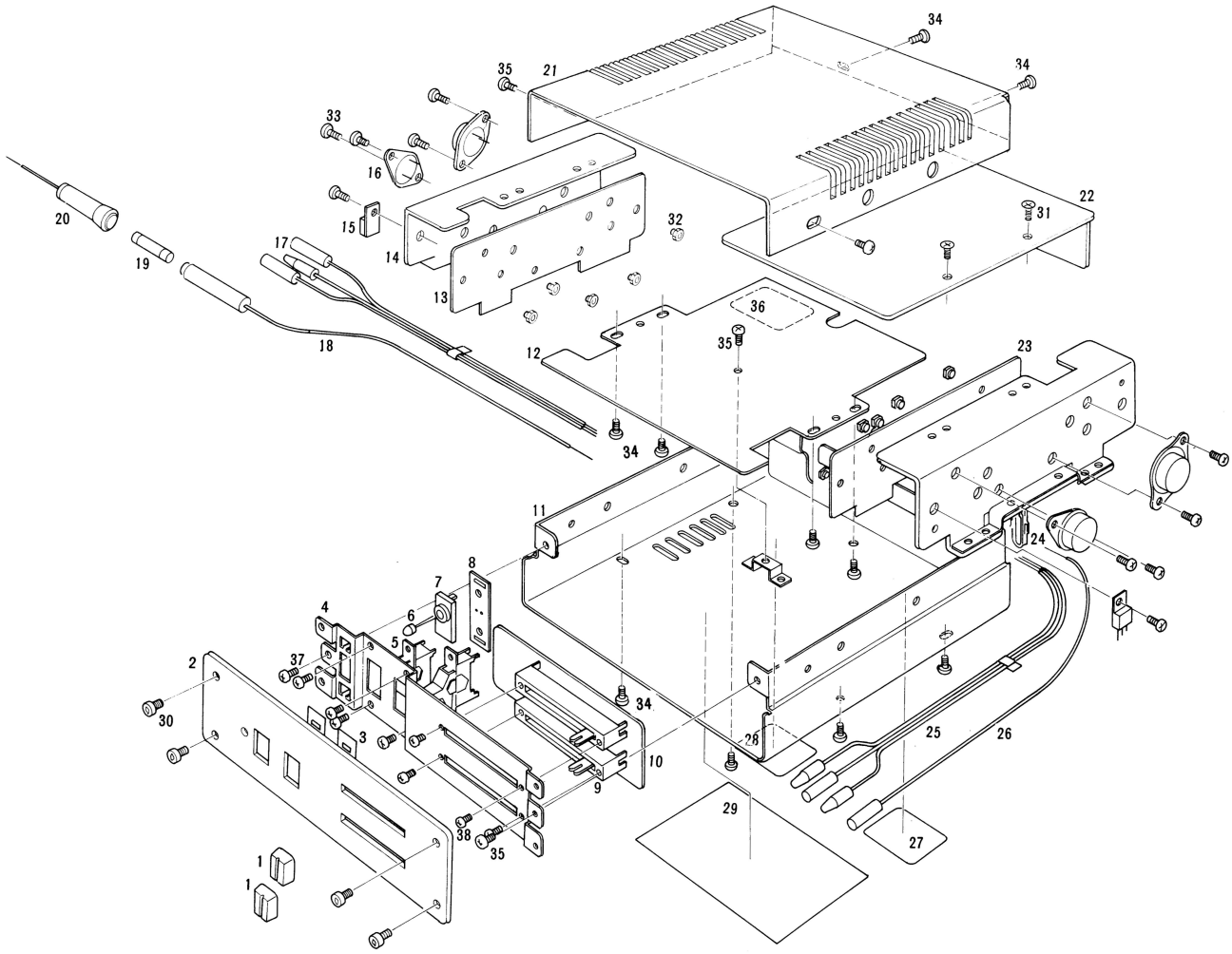

■PARTS LIST:

◎Main unit section EE-064A

※New parts

REF.NO.	PART NO.	DESCRIPTION	Rank
1	※380-3400-02	Knob	2
2	370-3075-00	Escutcheon	
3	353-0106-00	Shade	
4	309-0304-00	Front plate	
5	※013-3324-00	Switch	3
6	001-0166-00	Diode	1
7	335-0887-00	Molded part	
8	099-4823-00	PWB	
9	012-3362-00	Variable resistor	3
10	099-4822-00	PWB	
11	311-0919-00	Lower case	
12	099-4824-00	PWB	
13	099-4825-00	PWB	
14	313-0988-01	Heat sink	
15	100-0815-15	Transistor (2SA815)	1
16	101-0531-15	Transistor (2SB531)	1
17	851-2057-05	SP-lead	
18	850-1822-00	A-lead	
19	※120-0070-00	Fuse	1

REF.NO.	PART NO.	DESCRIPTION	Rank
20	850-1844-01	A-lead	
21	310-0898-00	Upper case	
22	313-0989-01	Heat sink	
23	099-4825-00	PWB	
24	335-0580-00	Molded part	
25	851-2216-00	SP-lead	
26	850-1889-00	A-lead	
27	286-3678-00	Setplate	
28	285-0656-00	Guide label	
29	285-0699-00	Guide label	3
30	※716-0317-00	Special screw	3
31	731-3008-41	Taptight(M3×8)	
32	725-0182-00	Plate nut	
33	714-3008-11	Machine screw (M3×8)	
34	731-3008-89	Taptight(M3×8)	
35	731-3006-89	Taptight(M3×6)	
36	347-0577-00	Paper part	
37	714-3004-81	Machine screw (M3×4)	
38	714-2004-81	Machine screw (M2×4)	

■EXPLODED VIEW:

◎EE-065A

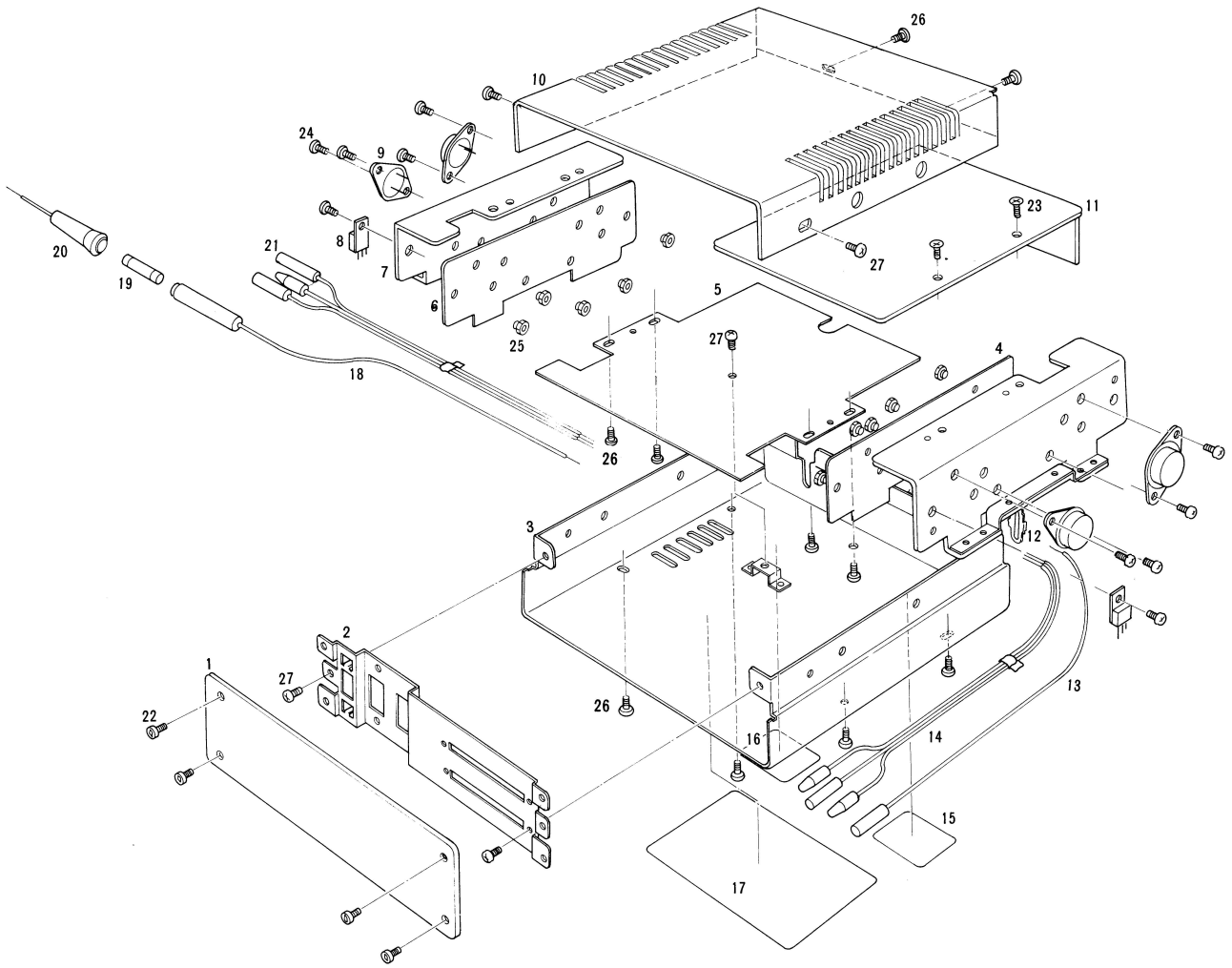

■PARTS LIST:

◎Main unit section EE-065A

※New parts

REF.NO.	PART NO.	DESCRIPTION	Rank
1	370-3075-01	Escutcheon	
2	309-0304-00	Front plate	
3	311-0919-00	Lower case	
4	099-4825-00	PWB	
5	099-4824-00	PWB	
6	099-4825-00	PWB	
7	313-0988-01	Heat sink	
8	100-0815-15	Transistor (2SA815)	1
9	101-0531-15	Transistor (2SB531)	1
10	310-0898-00	Upper case	
11	313-0989-01	Heat sink	
12	335-0580-00	Molded part	
13	850-1889-00	A-lead	
14	851-2216-00	SP-lead	

REF.NO.	PART NO.	DESCRIPTION	Rank
15	286-3678-00	Setplate	
16	285-0656-00	Guide label	
17	285-0699-00	Guide label	
18	850-1822-00	A-lead	
19	※120-0070-00	Fuse(7A)	1
20	850-1844-01	A-lead	
21	851-2057-05	SP-lead	
22	716-0317-00	Special screw	
23	731-3008-41	Taptight(M3×8)	
24	714-3008-11	Machine screw (M3×8)	
25	725-0182-00	Plate nut	
26	731-3008-89	Taptight(M3×8)	
27	731-3006-89	Taptight(M3×6)	

■PARTS LIST:

◎Electrical section EE-064A

REF.NO.	PART NO.	DESCRIPTION	Rank
Q_{302}	100-0561-25	Transistor (2SA561Y)	1
$Q_{103,203}$	100-0815-15	Transistor (2SA815O)	1
$Q^{104,105}_{204,205}$	101-0531-25	Transistor (2SB531Y)	1
$Q_{102,202}$	102-0735-15	Transistor 2SC735-O)	1
Q_{301}	102-1166-15	Transistor (2SC1166-O)	1
$D_{101,102,201,202}$	001-0092-00	Diode	1
$Q_{101,201}$	102-0732-28	Transistor (2SC732)	1
$D_{302,303,304}$	001-0077-00	Diode(10D4)	1
D_{301}	001-0100-00	Diode(U05C)	1
D_{305}	001-0166-00	Diode	1
$T_{101,201}$	※006-0923-00	Input trans	3
$T_{101,20^{\wedge}}$	※007-1068-00	Output trans	3
$T_{103,203}$	※009-0621-00	Choke	3
L_{301}	※010-1686-00	Coil	3
	※014-0440-00	Relay	2
	※014-0439-00	Relay	2
$C_{115,215}$	042-0165-00	Special capacitor (16V2200μF)	
$C_{302,304}$	043-0022-00	Special capacitor (250V0.04μF)	
$C_{102,202}$	141-6832-14	Polyester capacitor (50V0.068μF)	
$C_{105,205}$	141-1832-13	Polyester capacitor (50V0.018μF)	
$C_{103,203}$	141-1542-16	Polyester capacitor (50V0.15μF)	
$C_{104,204}$	141-1522-12	Polyester capacitor (50V0.0015μF)	
$C_{111,211}$	141-2222-12	Polyester capacitor (50V0.0022μF)	
$C_{113,213,114,214}$	141-2232-13	Polyester capacitor (50V0.022μF)	
$C_{101,201}$	141-1042-12	Polyester capacitor (50V0.1μF)	
$C_{107,207}$	144-1012-12	Polyester capacitor (50V100PF)	
$C_{109,209}$	180-2274-32	Electrolytic capacitor (16V220μF)	

※New parts

REF.NO.	PART NO.	DESCRIPTION	Rank
$C_{112,212}$	180-1074-32	Electrolytic capacitor (16V100μF)	
$C_{108,208}$	180-1064-32	Electrolytic capacitor (16V10μF)	
$C_{110,210,301}$	180-1074-22	Electrolytic capacitor (10V100μF)	
$R_{121,221}$	114-4702-52	Film resistor (1W47Ω±10%)	
$C^{106,206}_{116,216,303}$	180-1054-62	Electrolytic capacitor (50V1μF)	
$R_{116,216}$	111-1011-32	Film resistor (¼W100Ω±5%)	
$R^{103,203}_{117,217,303}$	111-1021-32	Film resistor (¼W1KΩ±5%)	
$R^{102,202,119,219}_{120,220,302}$	111-2221-32	Film resistor (¼W2.2KΩ±5%)	
$R_{115,215}$	111-4721-32	Film resistor (¼W4.7KΩ±5%)	
$R_{124,224}$	**111-1501-32**	**Film resistor (¼W15Ω±5%)**	
R_{301}	111-2231-32	Film resistor (¼W22KΩ±5%)	
$R_{103,203}$	111-1031-32	Film resistor (¼W10KΩ±5%)	
$R_{112,212}$	111-1811-32	Film resistor (¼W180Ω±5%)	
$R_{111,211}$	111-1531-32	Film resistor (¼W15KΩ±5%)	
$R_{110,210}$	111-5631-32	Film resistor (¼W56KΩ±5%)	
$R_{113,213}$	111-5621-32	Film resistor (¼W5.6KΩ±5%)	
$R_{114,214}$	111-3931-32	Film resistor (¼W39KΩ±5%)	
$R_{101,201}$	111-1011-42	Film resistor (½W100Ω±5%)	
$R_{125,225}$	111-4791-42	Film resistor (½W4.7Ω±5%)	
R_{304}	111-5611-42	Film resistor (½W560Ω±5%)	
$R_{107,207}$	111-2221-22	Film resistor (⅛W2.2KΩ±5%)	
$R_{109,209}$	111-4721-22	Film resistor (⅛W4.7KΩ±5%)	
$R_{108,208}$	111-1031-22	Film resistor (⅛W10KΩ±5%)	
$R_{105,205}$	111-1541-22	Film resistor (⅛W150KΩ±5%)	
$R_{106,206}$	111-1521-22	Film resistor (⅛W1.5KΩ±5%)	
$R_{122,222}$	114-2212-52	Film resistor (1W220Ω±10%)	

◎Electrical section EE-065A

REF.NO.	PART NO.	DESCRIPTION	Rank
Q_{302}	100-0561-25	Transistor (2SA561Y)	1
$Q_{102,202}$	100-0815-15	Transistor (2SA815-O)	1
$Q^{103,104}_{203,204}$	101-0531-25	Transistor (2SB531Y)	1
$Q_{101,201}$	102-0735-15	Transistor (2SC735-O)	1
Q_{301}	102-1166-15	Transistor (2SC1166-O)	1
$D_{302,303}$	001-0077-00	Diode	1
$D_{101,102,201,202}$	001-0092-00	Diode	1
D_{301}	001-0100-00	Diode(U05C)	1
$T_{101,201}$	006-0923-00	Input trans	3
$T_{102,202}$	007-1068-00	Output trans	3
$T_{103,203}$	009-0621-00	Choke	3
L_{301}	010-1686-00	Coil	3
	※014-0440-00	Relay	2
$C_{111,211}$	042-0165-00	Special capacitor (16V2200μF)	
$C_{302,304}$	043-0022-00	Special capacitor (250V0.04μF)	
$C_{102,202}$	141-3332-13	Polyester capacitor (50V0.033μF)	
$C_{107,207}$	141-2222-12	Polyester capacitor (50V0.0022μF)	
$C_{109,209,110,210}$	141-2232-13	Polyester capacitor (50V0.022μF)	
$C_{103,203}$	141-8232-14	Polyester capacitor (50V0.082μF)	
$C_{105,205}$	180-2274-32	Electrolytic capacitor (16V220μF)	

※New parts

REF.NO.	PART NO.	DESCRIPTION	Rank
$C_{108,208}$	180-1074-32	Electrolytic capacitor (16V100μF)	
$C_{104,204}$	180-1064-32	Electrolytic capacitor (16V10μF)	
$C_{106,206,301}$	180-1074-22	Electrolytic capacitor (10V100μF)	
$C_{112,212,303}$	180-1054-62	Electrolytic capacitor (50V1μF)	
$C_{101,201}$	181-1043-62	Electrolytic capacitor (50V0.1μF)	
$R_{108,208}$	111-1011-32	Film resistor (¼W100Ω±5%)	
$R^{104,204}_{109,209,303}$	111-1021-32	Film resistor (¼W1KΩ±5%)	
$R^{102,202,111,211}_{113,213,302}$	111-2221-32	Film resistor (¼W2.2KΩ±5%)	
$R_{105,205,110,210}$	111-4721-32	Film resistor (¼W4.7KΩ±5%)	
$R_{117,217}$	111-1801-32	Film resistor (¼W18Ω±5%)	
R_{301}	111-2231-32	Film resistor (¼W22KΩ±5%)	
$R_{114,214}$	114-4702-51	Film resistor (1W47Ω±10%)	
$R_{106,206}$	111-6821-32	Film resistor (¼W6.8KΩ±5%)	
$R_{103,203}$	111-1031-32	Film resistor (¼W10KΩ±5%)	
$R_{107,207}$	111-3931-32	Film resistor (¼W39KΩ±5%)	
$R_{101,201}$	111-1011-42	Film resistor (½W100Ω±5%)	
$R_{118,218}$	111-4791-41	Film resistor (½W4.7Ω±5%)	
$R_{115,215}$	114-2212-52	Film resistor (1W220Ω±10%)	