The Eddystone '770R' Communications Receiver for Very High Frequencies

FREQUENCY COVERAGE.

The individual ranges excluding overlaps are as follows :

Range 1	—	114 Mc/s to 165 Mc/s
Range 2	—	78 Mc/s to 114 Mc/s
Range 3	—	54 Mc/s to 78 Mc/s
Range 4	—	39 Mc/s to 54 Mc/s
Range 5	—	27 Mc/s to 39 Mc/s
Range 6	—	19 Mc/s to 27 Mc/s

VALVE SEQUENCE.

The nineteen valves are of the following types and perform the functions indicated :

V1	—	6AK5/EF95	(CV850)	Pentode RF Amplifier
V2	—	6AK5/EF95	(CV850)	Mixer
V3	—	6AK5/EF95	(CV850)	Oscillator
V4	—	6BA6	(CV454)	IF Amplifier AM and FM
V5	—	6BA6	(CV454)	IF Amplifier AM and FM
V6	—	6BA6	(CV454)	IF Amplifier AM and FM
V7	—	6BA6	(CV454)	IF Amplifier AM and FM
V8	—	6AU6	(CV2524)	Limiter FM only
V9	—	6AL5	(CV140)	FM Discriminator
V10	—	6AL5	(CV140)	Noise Limiter and AGC
V11	—	6AU6	(CV2524)	'S' Meter on AM. Tuning Indicator on FM
V12	—	6BA6	(CV454)	Beat Freq. Oscillator
V13	—	6AU6	(CV2524)	Noise Amplifier (Muting)
V14	—	12AU7	(CV491)	Muting Stage
V15	—	12AU7	(CV491)	Push-Pull Drivers
V16 & V17	—	6AM5	(CV136)	Push-Pull Output
V18	—	VR150/30	(CV216)	Voltage Stabiliser
V19	—	5Z4G	(CV1863)	Full Wave Rectifier

Detection on amplitude modulation and also rectification of noise output with Germanium Crystals.

TUNING MECHANISM AND SCALES.

The tuning mechanism is gear driven and has a reduction ratio of approximately 140 to 1. The scale is marked direct in frequency to an accuracy within one per cent on ranges 1 and 2, and within half of one per cent on the other ranges. The vernier bandspread device opens out the length of each scale to the equivalent of 32 feet.

INTERMEDIATE FREQUENCY.

The I.F. is 5·2 Mc/s, the oscillator frequency being higher than the signal frequency on all ranges. The BFO is pre-set to give a beat note of 1000 c.p.s.

INPUT IMPEDANCE.

The nominal input impedance is 72 ohms unbalanced, a coaxial socket being provided for the connection of the feeder cable. A trimmer control on the front panel permits correction being made for variations in aerial and feeder reactance.

OUTPUT IMPEDANCE.

The push-pull output stage delivers a maximum of ~~four~~ three watts to the 2·5 ohm speaker terminals. A jack on the front panel takes high resistance telephones. Pick up terminals are fitted. The audio frequency response is linear within ± 4 db over the range of 50 to 12000 c.p.s.

POWER SUPPLY.

The mains transformer has a selection panel permitting operation from 110 volt or 200/240 volt, 40/60 cycle supplies. the consumption being 90 volt-amps.

ELECTRICAL CHARACTERISTICS.

Sensitivity : better than 5 microvolts on all ranges, for a 15 db signal — to — noise ratio and 50 milliwatts output.

Selectivity : A.M. and C.W. — 40 db down, 50 kc/s off resonance
Narrow F.M. — 40 db down, 80 kc/s off resonance
Wide F.M. — 40 db down, 175 kc/s off resonance

Noise Factor :	Range 1... ...	not greater than 14 db
	Range 2... ...	„ „ „ 10 db
	Range 3... ...	„ „ „ 8 db
	Range 4... ...	„ „ „ 6 db
	Range 5 & 6...	„ „ „ 5 db

Image Ratio : Better than 20 db at 165 Mc/s and correspondingly greater at lower frequencies.

A.G.C. : The audio level does not change by more than 12 db when the input is varied 60 db above 5 microvolts.

Frequency Stability : Drift is less than ~~·001~~ ·003 of 1% per degree Centigrade, and less than ~~·001~~ ·003 of 1% for a 5% change in mains voltage.

F.M. Deviation : The discriminator is designed for a deviation of 15 kc/s in the narrow position, and 75 kc/s in the wide position.

Muting : The sensitivity of the muting circuit can be varied to operate on signals of a minimum strength of 5 microvolts.

OPERATION.

GENERAL.

The plug on the transformer selector panel is normally in the 230 volt position where it may remain unless the applied mains voltage differs appreciably from 230 volts.

The type of aerial used with the '770R' will be governed by the type of service in which the receiver is employed. In some circumstances the aerial will be a directional beam covering a moderate frequency range, whilst in others a broad-band aerial will be desirable. The polarisation should agree with that of the incoming signals it is required to receive, whilst the impedance should be arranged to match into 72 ohm coaxial cable. The lower end of the latter is attached to the plug supplied and connected to the coaxial socket at the rear of the receiver.

A loudspeaker of 2·5/3 ohms impedance is connected to the speaker terminals at the rear or alternatively a pair of high resistance telephones plugged into the jack on the front panel.

WAVECHANGE.

The large left-hand knob controls the position of the turret, and the figures indicate the six ranges available. A positive lock ensures the turret contacts are in the correct position and movement of the knob automatically disengages the locking mechanism.

MODE.

On the extreme left is a four position switch which controls the type of transmission acceptable.

C.W. Telegraphy : The switch is set at ' C.W.', thereby bringing the B.F.O. into operation, adjusting the selectivity to narrow, making connection to the crystal diode used on AM signals and cutting out of circuit the FM section.

AM Telephony : As with CW, except that the B.F.O. is rendered inoperative. The 'S' meter functions as a tuning indicator and the signal should be tuned to give maximum deflection.

Narrow-Band Frequency Modulated Telephony : The switch is set to 'NFM.' The circuits are thereby set to the appropriate degree of selectivity, the AM diode is cut out and the FM section brought into operation. This position is intended for communications speech reception, with a deviation of 15 kc/s.

Wide-Band Frequency Modulated Telephony : The switch is placed at ' FM.' Further adjustments are automatically made to the gain and band-widths of the circuit, to permit acceptance of high quality frequency modulated transmissions, with deviation of up to 75 kc/s.

In the two FM positions, the milliammeter is used to ensure correct tuning. On passing through a signal, the meter will first swing in one direction, then in the other. The centre position, between the two peaks and with the needle coincident with the special mark on the meter scale, is the correct tuning point.

GAIN CONTROLS.

The RF stage operates at full gain at all times. Gain of the IF stages is adjusted by means of R26 but it is desirable to keep this control well advanced, except on strong CW signals. Audio Gain is controlled by R60 in the usual way.

NOISE LIMITER.

The noise limiter is effective against transient interference which may be experienced when the receiver is set to ' CW ' or ' AM.'

MUTING CONTROL.

With the Switch in the ' Off ' position, the receiver performs normally. The rise and fall of background noise, as a distant carrier is switched off and on, can be disturbing to an operator and this effect can be eliminated by placing the muting switch to ' On.' The receiver is then silent until a signal is received of a strength sufficient to overcome the bias delay. The latter is adjustable for signals of five microvolts upwards.

STANDBY SWITCH.

In the ' On ' position, the standby switch desensitises the receiver and is primarily for use when an associated transmitter is in operation. Leads are taken to a terminal panel at the rear marked ' RELAY,' thus enabling other equipment to be controlled by movement of the standby switch.

~~ALIGNMENT~~ PROCEDURE, ~~' 770R'~~.

I.F. ALIGNMENT.

Switch on receiver and allow to "warm-up". Set controls as follows :

A.F. GAIN...	...	Max.
I.F. GAIN ...	...	Max.
SELECTIVITY	...	to AM
N.L.... ...	...	off
MUTING ...	...	off

Remove R.F. and Oscillator valves and set turret to a neutral position—that is, between ranges.

Set signal generator to 5·2 Mc/s, and modulation to 30%. Connect output meter to 2·5 ohm sockets.

Connect signal generator lead to the grid of V7 (last I.F. Amp) via a ·01 condenser and increase signal generator output until a reading is obtained on output meter. Adjust secondary winding core of last I.F. transformer (i.e. upper core), for maximum reading on output meter, reducing generator input as necessary. Now repeat adjustment of primary winding core. Transfer the generator input to grid of V6 and carry out the same procedure, following on through the other I.F. stages. When the generator lead is transferred to the grid of the mixer valve V2, in the R.F. assembly, adjust secondary winding core (upper) as before, but on trimming the primary core it is necessary to adjust the core to the second peak response, that is, with the core further into the former.

NOTE : Two peaks are obtainable when adjusting the I.F.T. cores, the first peak on screwing the core into the former is the correct one, except for the first I.F.T. primary core—the correct one in this case is the second peak.

The approximate inputs for 50 milliwatts output are as follows :

GRID of V7	...	...	60 millivolts
GRID of V6	...	...	4.5 millivolts
GRID of V5	...	...	600 microvolts
GRID of V4	...	...	65 microvolts
GRID of V2 (Mixer)		...	6·5 microvolts

B.F.O. ALIGNMENT.

With signal generator still connected to grid of V2 and set to 5·2 Mc/s as for I.F. alignment, switch off signal generator modulation and change switch to C.W. Adjust B.F.O. core for beat note of 1,000 cycles.

DISCRIMINATOR ALIGNMENT.

Controls set as for I.F. Alignment, but selectivity switch to F.M.

Signal generator 5·2 Mc/s unmodulated.

Signal generator output at maximum (1 volt).

Connect generator lead to grid of limiter V8.

Connect a centre zero 0–50 microamps movement across the output of the discriminator double diode with a 100K resistor in series (i.e. from the cathode of the double diode V9 to earth). Should the discriminator be in perfect alignment at 5·2 Mc/s, the centre zero meter will read zero, and if this is so, a check can be made by moving the signal generator frequency either side of 5·2 Mc/s. This should result in equal meter readings on either side. If they are unequal, adjustment of the primary core (lower core) should be made for balanced readings.

Should complete alignment of the discriminator be required, set the secondary core (upper), so that the top of the core is flush with the top of discriminator can, adjust primary core (lower) for maximum deflection on meter—and then adjust secondary core (upper) for zero reading on meter. Move generator frequency either side of 5·2 Mc/s and check balance, if unbalanced adjust primary core.

NOTE : Peak deflection should approximate 25 microamps.

R.F. ALIGNMENT.

Normally the only operation likely to be required is the adjustment of the oscillator and mixer trimmers, and for this the following procedure should be adopted.

Set wavechange to Range 6.

Connect signal generator to co-axial aerial input and receiver tuning scale to 26 Mc/s. Connect 1000/100 kc/s crystal calibrator in shunt with 75 ohm signal generator load for calibration purposes—should the 26 Mc/s harmonic be appreciably off the 26 Mc/s mark on the scale (accuracy of calibration is better than 0·5% Ranges 6, 5, 4 and 3, and better than 1% on Ranges 2 and 1), adjust oscillator trimmer and check calibration along entire range. If this is correct adjust mixer trimmer at 26 Mc/s for maximum output. Check sensitivity at 26 and 21 Mc/s, ascertaining that it conforms with figure given in the tables. The above procedure is repeated for Ranges 5, 4, 3, 2 and 1, with the alignment points shown in the tables.

COMPLETE RE-ALIGNMENT.

Should complete re-alignment be necessary, the following procedure should be adopted.

Remove all coil boxes with the exception of Range 6 and connect signal generator and calibrator as above. Should the 26 Mc/s and 21 Mc/s harmonics be off the scale marks appreciably, correct the 26 Mc/s with the oscillator trimmer and the 21 Mc/s with the oscillator core. These two adjustments, core and trimmer, are interdependent and it is necessary to repeat the above procedure once or twice to ensure optimum adjustment.

To align the R.F. circuits set aerial trimmer to mid position, set signal generator and receiver to 21 Mc/s and adjust aerial and mixer core for maximum on output meter. Set signal generator to 26 Mc/s and adjust mixer trimmer—also ensure that aerial trimmer is aligned in central position. Continue adjusting core and trimmer until no further improvement can be achieved.

The above method is repeated for Ranges 5, 4 and 3, with the following alignment points :

Range 5	...	29 Mc/s and 38 Mc/s
Range 4	...	42 Mc/s and 53 Mc/s
Range 3	...	60 Mc/s and 76 Mc/s

Ranges 1 and 2 have air cored coils and it is extremely unlikely that the inductance will ever require adjustment—the procedure is similar to Ranges 6, 5, 4 and 3, except that having

no dust core, this adjustment must be carried out by altering the pitch of the coil winding necessitating the removal of the coil box lid by taking out the eight Philips head screws. Alignment points for Ranges 1 and 2 are :

Range 2	...	86 Mc/s and 110 Mc/s
Range 1	...	120 Mc/s and 160 Mc/s

When completely aligned correctly, the following sensitivities should be attained for 50 milliwatts output.

Range 1	...	160 Mc/s	...	4 microvolts
		120 Mc/s	...	5 microvolts
Range 2	...	110 Mc/s	...	2 microvolts
		86 Mc/s	...	2.microvolts
Range 3	...	76 Mc/s	...	2 microvolts
		60 Mc/s	...	2 microvolts
Range 4	...	53 Mc/s	...	2 microvolts
		42 Mc/s	...	2 microvolts
Range 5	...	38 Mc/s	...	2 microvolts
		29 Mc/s	...	2 microvolts
Range 6	...	26 Mc/s	...	2 microvolts
		21 Mc/s	...	2 microvolts

ADJUSTMENT OF PRE-SET CONTROLS.

ZERO AM. (Note this control must be adjusted first).

Set controls as follows :

Selectivity	...	A.M.
I.F. Gain	...	Max.
A.F. Gain	...	Max.
N.L. ...	...	Off
Muting	...	Off

Tune to centre of scale Range 4 and short aerial input—adjust " Zero-AM " control so that tuning meter reads zero.

CENTRE ZERO FM.

Connect signal generator to the aerial socket, switch to AM position and tune in an unmodulated signal at any frequency. Tune this signal in by means of the " S " meter, ensuring that signal is tuned for maximum reading—switch to F.M. and without touching the tuning knob, adjust " Centre Zero FM " for a centre zero deflection of the meter.

MUTING LEVEL.

This is set to suit operating conditions and individual requirements.

EXTERNAL POWER SUPPLY.

Provision can be made for the use of alternative types of external power supplies.

Sole Manufacturers : STRATTON & CO. LTD., BIRMINGHAM, 31

Cables : Stratnoid, Birmingham

Printed in England

July, 1954

Voltage Values

The figures given below are obtained with the controls set as follows :

I.F. gain max. A.F. gain min. Muting on N.L. off.
Selectivity at A.M. Turret to range 6. Stand-by off.
Muting level fully clockwise.

Circuit Ref.	20,000 ohms per volt	AVO.40
A.	1·5	1·4
B.	90	71
C.	137	136
D.	~~10~~ 23	~~9~~ 3 (Do Range)
E.	146	145
F.	110	100
G.	3·4	3·3
H.	145	120
J.	212	210
K.	3·4	3·3
L.	145	120
M.	212	210
N.	1	1
O.	98	80
P.	207	204
Q.	1	1
R.	98	80
S.	207	204
T.	30	24
U.	30	24
V.	·4	·35
W.	33	16
X.	98	30
Y.	26	2·5
Z.	212	84
A–	35	34
B–	220	163
C–	33	24
D–	4	2
E–	96	66
F–	4	2
G–	96	66
H–	12	11·8
J–	218	216
K–	218	216
L–	224	224
M–	85	55 (BFO "on")
N–	150	150
O–	2·6	2·5
P–	150	150
Q–	262	260
R–	242 A.C.	240 A.C.

Power input 90 watts

Circuit No. B.P.818

Component Vaiues

CONDENSERS

C1. 90+90 pF Split Stator (R.F. Sect).
C2. 40pF
C3. ·0005 mfd Tub. Paper
C4. ·003 mfd Tub. Paper
C5. ·0005 mfd Tub. Paper
C6. 91 pF Feed Through
C7. ·0005 mfd Tub. Paper
C8. 40 pF
C9. 90+90 pF Split Stator (Mixer Sect.)
C10. 91 pF Feed Through
C11. 91 pF Feed Through
C12. 91 pF Feed Through
C13. 40 pF Ceramic
C14. 91 pF Feed Through
C15. 91 pF Feed Through
C16. 40 pF
C17. 90+90 pF Split Stator (Osc. Sect.)
C18. ·0005 mfd Tub. Paper
C19. ·01 mfd Tub. Paper
C20. 100 pF Silvered Mica
C21. 100 pF Silvered Mica
C22. ·01 mfd Tub. Paper
C23. ·01 mfd. Tub Paper
C24. 100 pF Silvered Mica
C25. 100 pF Silvered Mica
C26. ·01 mfd Tub. Paper
C27. ·01 mfd Tub. Paper
C28. ·01 mfd Tub. Paper
C29. ·01 mfd Tub. Paper
C30. ·01 mfd Tub. Paper
C31. ·01 mfd Tub. Paper
C32. 100 pF Silvered Mica
C33. 100 pF Silvered Mica
C34. ·01 mfd Tub. Paper
C35. ·01 mfd Tub. Paper
C36. ·01 mfd Tub. Paper
C37. ·01 mfd Tub. Paper
C38. 100 pF Silvered Mica
C39. 100 pF Silvered Mica
C40. 10 pF Ceramic
C41. 3 pF Silvered Mica
C42. ·01 mfd Tub. Paper
C43. 100 pF Silvered Mica
C44. 100 pF Silvered Mica
C45. 100 pF Ceramic
C46. ·01 mfd Tub. Paper
C47. 1 pF Silvered Mica
C48. 100 pF Ceramic or Silvered Mica
C49. ·01 mfd Tub. Paper
C50. 50 pF Silvered Mica
C51. ·01 mfd Tub. Paper
C52. ·1 mfd Tub. Paper
C53. ·01 mfd Tub. Paper
C54. 100 pF Silvered Mica
C55. 50 pF Silvered Mica
C56. 50 pF Silvered Mica
C57. 50 pF Ceramic
C58. 100 pF Ceramic
C59. ·0005 mfd Tub. Paper
C60. 100 pF Ceramic
C61. ·01 mfd Tub. Paper
C62. ·01 mfd Tub. Paper
C63. 100 pF Ceramic
C64. ·005 mfd Tub. Paper
C65. ·005 mfd Tub. Paper
C66. ·01 mfd Tub. Paper
C67. ·01 mfd Tub. Paper
C68. .005 mfd Tub. Paper
C69. ·005 mfd Tub. Paper
C70. ·1 mfd Tub. Paper
C71. 4 mfd Tub. Elect 350V D.C. Wkg.
C72. ·01 mfd Moulded Mica
C73. 5 mfd Tub. Elect. 50V. D.C. Wkg.
C74. ·01 mfd Tub. Paper
C75. ·01 mfd Tub. Paper
C76. ·01 mfd Moulded Mica
C77. ·01 mfd Moulded Mica
C78. ~~·01 mfd Tub. Paper~~ 500 pfd Tub Paper
C79. ·01 mfd Moulded Mica
C80. ·01 mfd Moulded Mica
C81. ·01 mfd Tub. Paper
C82. ·01 mfd Tub. Paper
C83. 100 pF Silvered Mica
C84. 100 pF Silvered Mica
C85. ·01 mfd Tub. Paper
C86. 400 pF Silvered Mica
C87. ·01 mfd Tub. Paper
C88. ·01 mfd Tub. Paper
C89. ·01 mfd Tub. Paper
C90. ·01 mfd Tub. Paper
C91. 50 mfd 450V. D.C. Wkg. Tub. Elect.
C92. 50 mfd 450V. D.C. Wkg. Tub. Elect.
C93. 3–12 pF Air Trimmer
C94. 10 pF Ceramic
C95. 2–12 pF Air Trimmer
C96. 1 pF Silvered Mica
C97. 12 pF Silvered Mica
C98. 2–12 pF Air Trimmer
C99. 10 pF Ceramic
C100. 2–12 pF Air Trimmer
C101. 1 pF Silvered Mica
C102. 12 pF Silvered Mica
C103. 970 pF Silvered Mica ± 2%
C104. 2–12 pF Air Trimmer
C105. 500 pF Tub. Paper
C106. 2–12 pF Air Trimmer
C107. 3 pF Silvered Mica
C108. 770 pF Silvered Mica ± 2%
C109. 12 pF Silvered Mica
C110. 2–12 pF Air Trimmer
C111. ~~40~~ [illegible]
C112. 2–12 pF Air Trimmer
C113. 3 pF Silvered Mica
C114. 770 pF Silvered Mica ± 2%
C115. 12 pF Silvered Mica
C116. 2–12 pF Air Trimmer
C117. ·01 Tub Paper
C118. 2–12 pF Air Trimmer

CONDENSERS (continued)

C119. 3 pF Silvered Mica
C120. 500 pF Silvered Mica ± 2%
C121. 12 pF Silvered Mica
C122. 2–12 pF Air Trimmer
C123. ·0005 Tub Paper
C124. 2–12 pF Air Trimmer
C125. 3 pF Silvered Mica
C126. 200 pF Silvered Mica ± 2%
C127. 12 pF Silvered Mica
C128. 2–12 pF Air Trimmer
C129. 10 pF Ceramic
C130. ~~[illegible]~~ ·01 mfd Tub Paper

RESISTORS

R1. 12 ohms
R2. 200 ohms
R3. 33,000 ohms
R4. 1,000 ohms
R5. ~~47,000 ohms~~ 1 Megohm
R6. ~~3,000 ohms~~ non. existing
R7. ·47 Megohm
R8. 22,000 ohms
R9. 10,000 ohms
R10. 1,000 ohms
R11. 1,000 ohms
R12. 33,000 ohms. 1W
R13. 1,000 ohms
R14. 22 ohms
R15. ·47 Megohm
R16. 68 ohms
R17. ·47 Megohm
R18. 1,000 ohms
~~R19. 33,000 ohms. 1W~~
R20. ·27 Megohm
R21. 68 ohms
R22. 390 ohms
R23. 120 ohms
R24. Value determined during test
R25. 47,000 ohms
R26. 10,000 Pot.
R27. 68 ohms
R28. ·47 Megohm
R29. 1,000 ohms
R30. 33,000 ohms. 1W
R31. 22 ohms
R32. ·47 Megohm
R33. ·47 Megohm
R34. ·47 Megohm
R35. 68 ohms
R36. 1,000 ohms
R37. 33,000 ohms. 1W
R38. 200 ohms
R39. 200 ohms
R40. ·1 Megohm
R41. ·1 Megohm
R42. 1 Megohm
R43. 2 Megohm
R44. ·27 Megohm
R45. 22,000 ohms
R46. ·47 Megohm
R47. 68,000 ohms
R48. 68,000 ohms
R49. ·1 Megohm
R50. ·1 Megohm
R51. ·1 Megohm
R52. 1 Megohm
R53. ·27 Megohm
R54. 47,000 ohms. 1W
R55. ·82 Megohm
R56. 1 Megohm
R57. 1 Megohm
R58. 150 ohms
R59. 5,000 ohms. Pot.
R60. ·5 Megohm. Pot.
R61. 10,000 ohms
R62. ·47 Megohm
R63. 1 Megohm
R64. 1 Megohm
R65. 27,000 ohms
R66. 47,000 ohms. 1W
R67. ·1 Megohm
R68. ·1 Megohm
R69. ·1 Megohm
R70. 3,300 ohms
~~R71. ·27 Megohm~~
R72. 6,800 ohms
R73. ·47 Megohm
R74. 3,300 ohms
R75. 3 Megohm
R76. ·47 Megohm
R77. 3 Megohm
R78. 620 ohms
R79. 3,300 ohms
R80. 68,000 ohms
R81. ·47 Megohm
R82. 47,000 ohms. 1W
R83. 4,700 ohms
R84. ~~2,700~~ ohms 68,000 ohms
R85. 2,700 ohms
R86. 22,000 ohms
R87. 47,000 ohms
R88. 2 Megohm
R89. 600 ohms. Pot.
R90. 560 ohms
R91. 600 ohms. Pot.
R92. 47,000 ohms. 1W
R93. 1,800 ohms. Wire Wound
R94. ·27 Megohm
R95. 6,800 ohms
R96. ·27 Megohm
R97. 10,000 ohms
R98. 220 ohms
R99. 22,000 ohms
R100. 150 ohms
R101. 22,000 ohms
R102. ·27 Megohm
R103. ·47 Megohm
R104 200 ohms

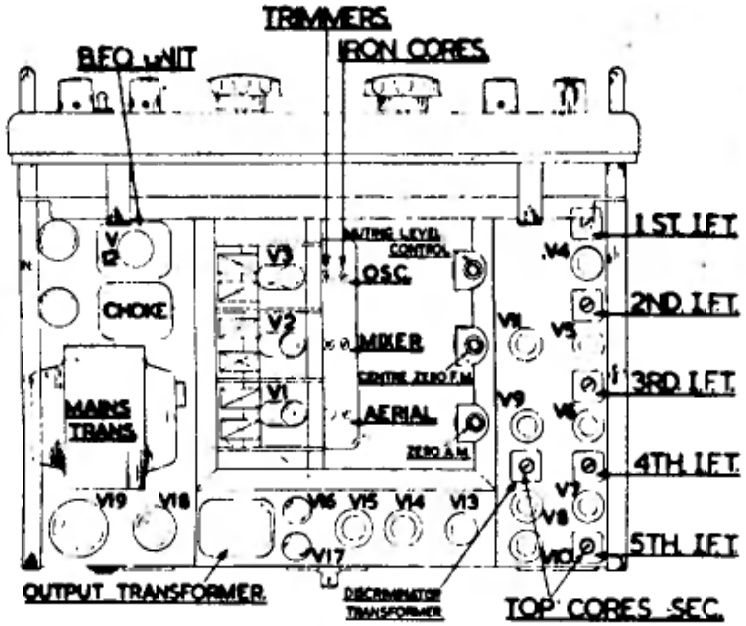

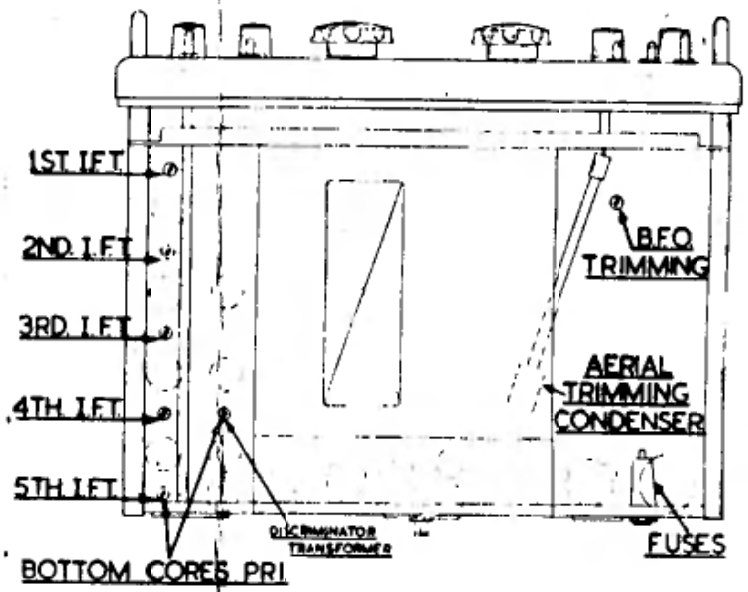

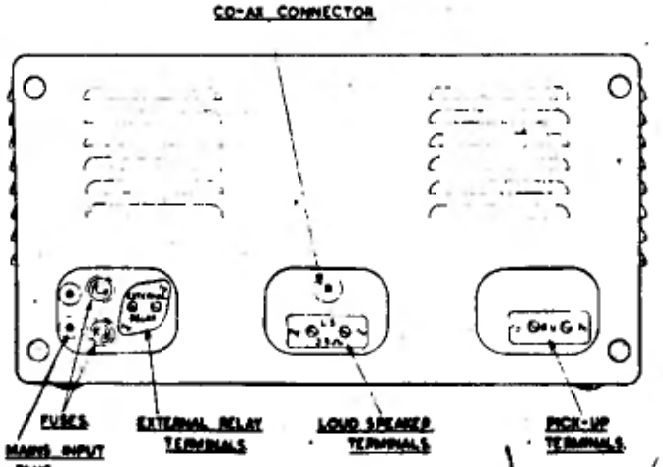

OCTAL SERIES

B7G. SERIES

B9A SERIES

VALVE	V. No.	PIN CONNECTIONS 1	2	3	4	5	6	7	8	9	SERIES	SERVICE NUMBERS
6AK5 (EF95)	V1,2&3	G1	K	H	H	A	G2	K	-	-	B7G.	CV850
6BA6	V4,5,6 7&12	G1	G3 &	H	H	A	G2	K	-	-	B7G.	CV454
6AU6	V8,11 & 13	G1	G3 &	H	H	A.	G2	K	-	-	B7G.	CV2524
6AL5	V9&10	K1	A2	H	H	K2	&	A1			B7G.	CV140
12AU7	V14&15	A2	G2	K2	H	H	A1	G1	K1	H TOP	B9A (NOVAL)	CV491.
6AM5	V16&17	G2	K G3	H	H	A	-	G2	-	-	B7G	CV136
VR150/30	V18	-	K	-	-	A	-	-	-	-	OCTAL	CV216.
5Z4G	V19	-	H	-	A2	-	A1	-	K H	-	OCTAL	CV1863

FOR USE WITH CIRC NUMBER BP 818.

SHEET 3

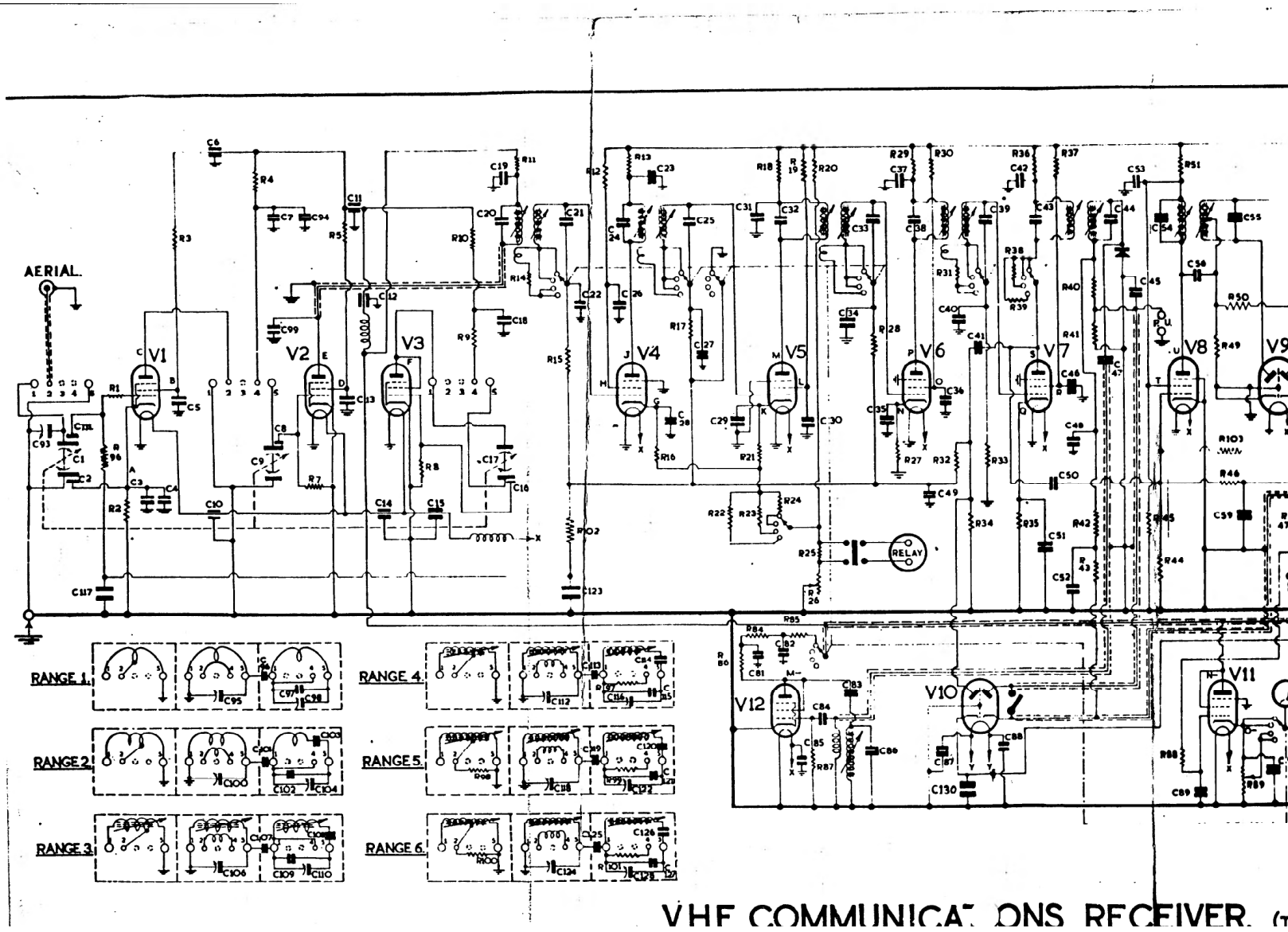

VHF COMMUNICATIONS RECEIVER.

[redacted]

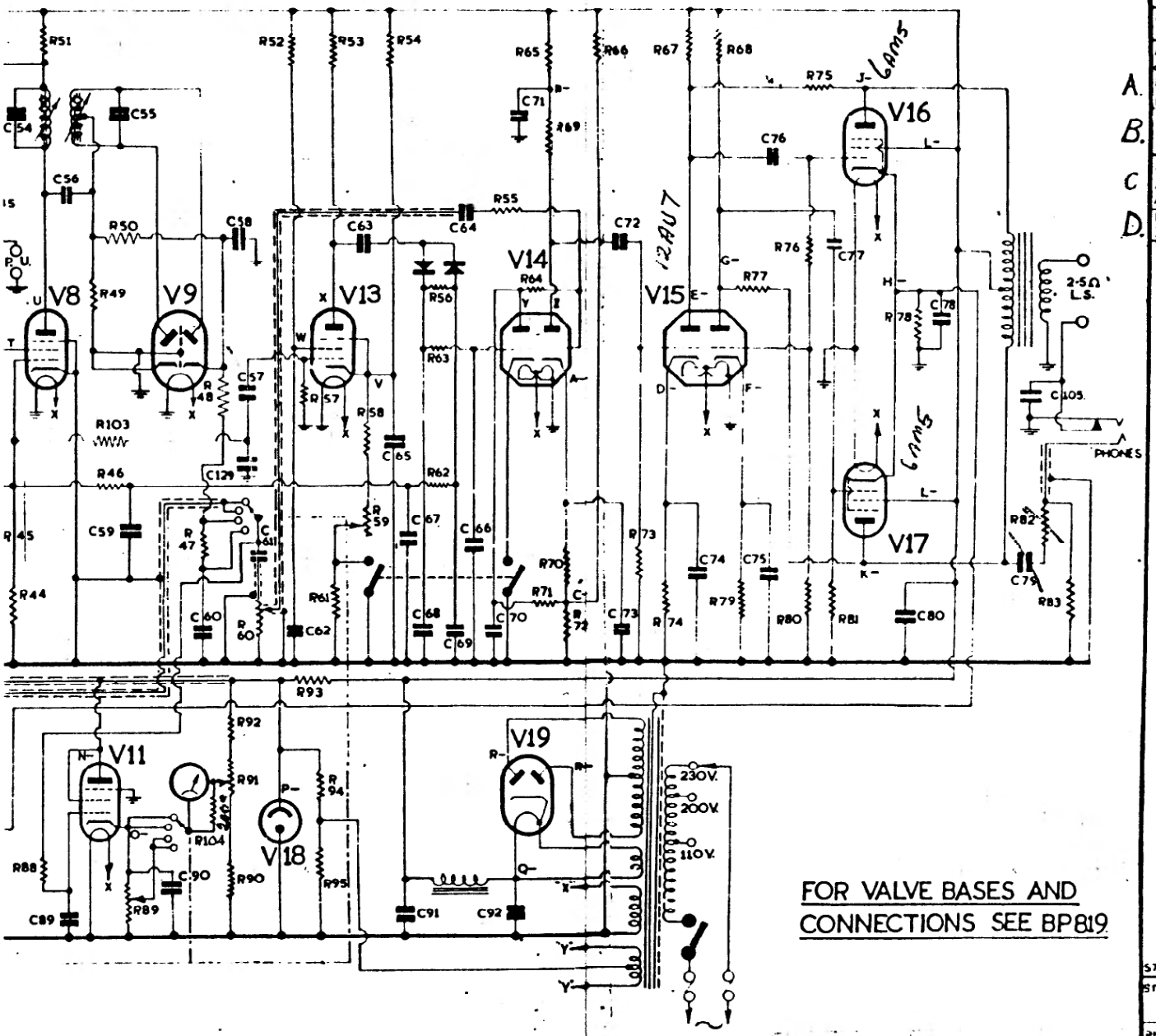

FIVER (TYPE 770R) BP818.