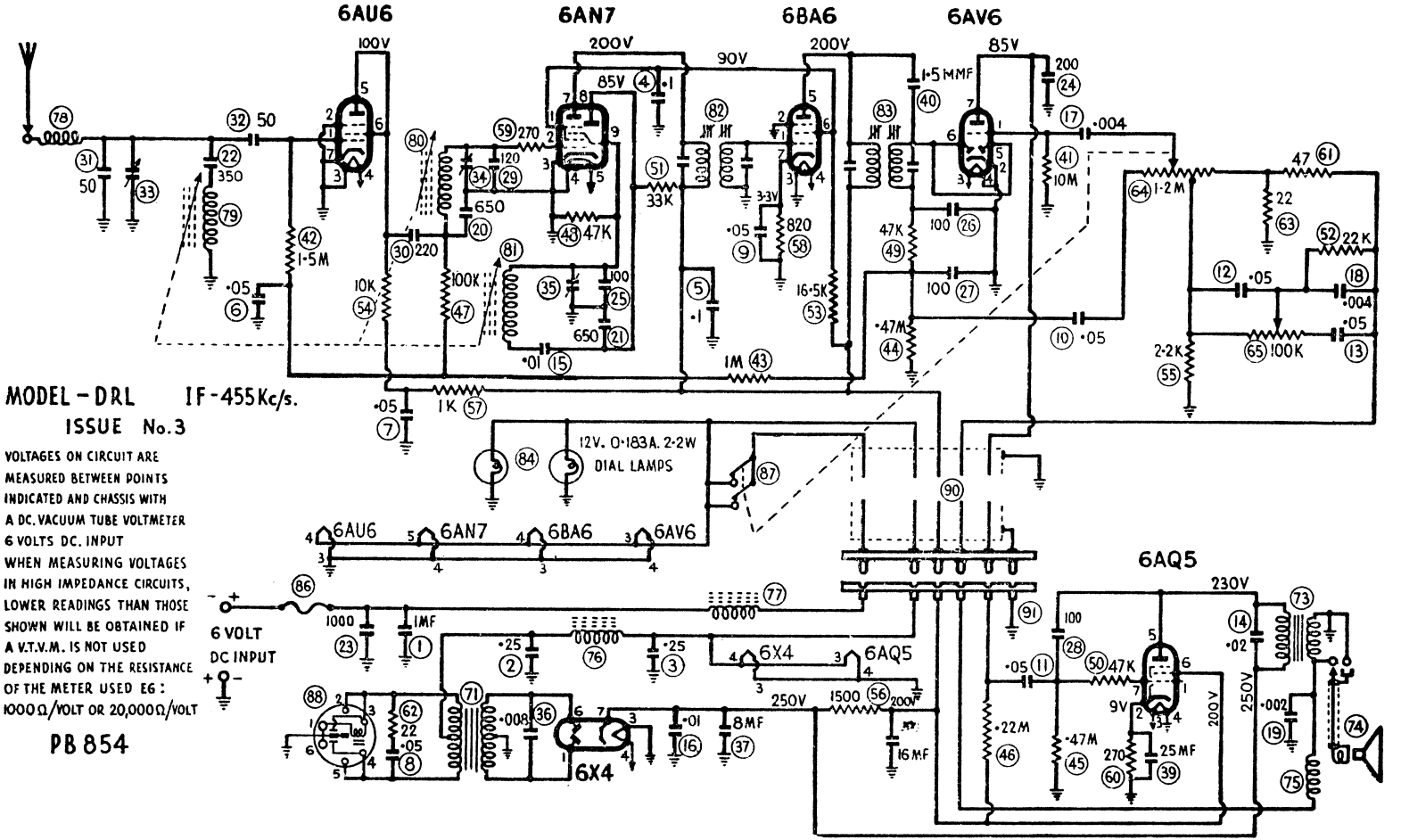
6AU6
6AN7
6BA6
6AV6
6AQ5
6X4
100V
200V
85V
90V
230V
250V
MODEL - DRL
IF - 455Kc/s.
ISSUE No.3
VOLTAGES ON CIRCUIT ARE MEASURED BETWEEN POINTS INDICATED AND CHASSIS WITH A DC. VACUUM TUBE VOLTMETER 6 VOLTS DC. INPUT
WHEN MEASURING VOLTAGES IN HIGH IMPEDANCE CIRCUITS, LOWER READINGS THAN THOSE SHOWN WILL BE OBTAINED IF A V.T.V.M. IS NOT USED DEPENDING ON THE RESISTANCE OF THE METER USED EG: 1000Ω/VOLT OR 20,000Ω/VOLT
PB 854
12V. 0·183A. 2·2W DIAL LAMPS
6 VOLT DC INPUT

A13