TELEQUIPMENT
OSCILLOSCOPE
STORAGE TYPE DM64

MANUAL

TELEQUIPMENT ®

DANGER

It is not possible to screen all high voltages, so care should be taken not to touch high voltage tags. Also where possible the instrument should be unplugged AND switched off during servicing. A BLEEDER PATH FOR THE EHT IS NOT PROVIDED, so after switching off and before touching any internal parts, the EHT should be discharged by temporarily shorting the appropriate points to chassis, (for instance the CRT cathode pin and PDA connector where applicable).

OSCILLOSCOPE

STORAGE TYPE DM64

FOR SERVICING AND SPARES ENQUIRIES
SEE THE INFORMATION AT START OF CHAPTER 5.

TEKTRONIX U.K. LTD.,
313 Chase Road,
Southgate,
London, N14 6JJ
England.

SERVICE
MALVERN
0628 46000

Telephone: 01-882 6100

Telex: 262004

Cables: TELEQUIPT LONDON N.14

TEKTRONIX, INC.,
P.O. Box 500,
Beaverton,
Oregon (97005)
U.S.A.

Telephone: (503) 644-0161

Telex: 36-0485

Cables: TEKTRONIX

TELEQUIPMENT is a registered trade mark of TEKTRONIX U.K. LTD.

070-1200-00

Issue 11 (2876)
November 1976

© Copyright (1974) by
TEKTRONIX U.K. LTD.

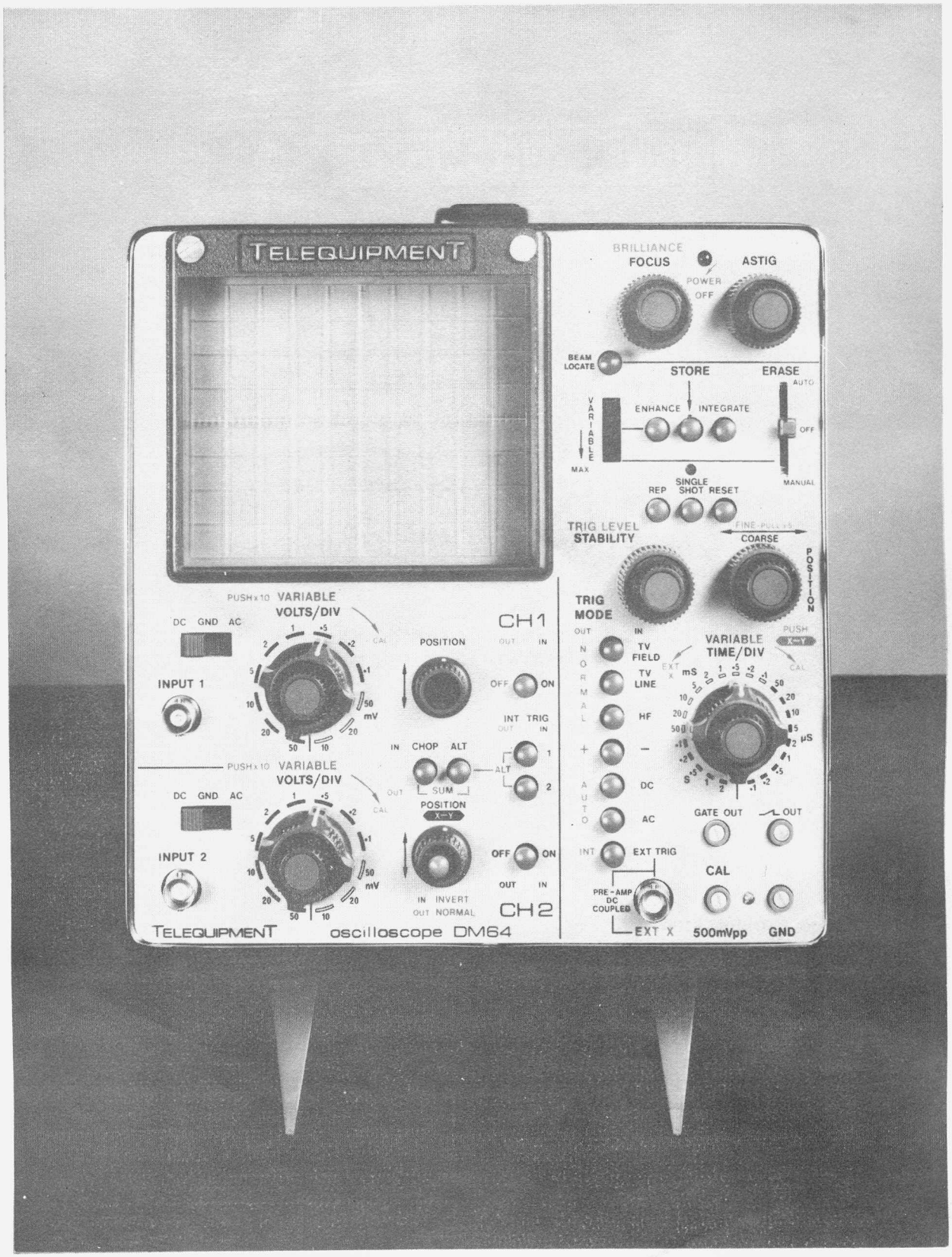
TELEQUIPMENT
BRILLIANCE
FOCUS
ASTIG
POWER OFF
BEAM LOCATE
STORE
ERASE
AUTO
OFF
MANUAL
VARIABLE
MAX
ENHANCE
INTEGRATE
SINGLE SHOT
REP
RESET
TRIG LEVEL STABILITY
FINE-PULL x 5
COARSE
POSITION
TRIG MODE
OUT
IN
NORMAL
AUTO
TV FIELD
TV LINE
HF
DC
AC
INT
EXT TRIG
PRE-AMP DC COUPLED
EXT X
PUSH x 10
VARIABLE VOLTS/DIV
DC GND AC
INPUT 1
INPUT 2
CAL
mV
POSITION
X-Y
CH1
CH2
OFF ON
INT TRIG
IN CHOP ALT
ALT
SUM
IN INVERT
OUT NORMAL
VARIABLE TIME/DIV
PUSH X-Y
mS
µS
GATE OUT
OUT
CAL
500mVpp
GND
TELEQUIPMENT
oscilloscope DM64

INTRODUCTION

The DM64 is an all solid-state, dual trace, storage oscilloscope. It uses a bistable CRT to provide a large, bright display. Stored waveforms may be viewed for up to one hour.

In the non store mode, it performs as a conventional oscilloscope.

The design of this instrument is subject to continuous development and improvement, consequently this instrument may incorporate minor changes in detail from the information contained herein, which would, in the main, affect the Components List and the reader should pay particular attention to the notes at the beginning of chapter 5.

CARE OF STORAGE SCREEN

To minimize the risk of damaging the storage screen, the following precautions should be observed.

Because an undeflected bright spot on the CRT screen can burn the storage target, the BRILLIANCE control should be kept to the minimum required to produce a clear, well-defined display. Care must be observed in the degree of writing-beam intensity used, particularly when using slow sweep rates.

When attempting to store fast-rising or fast-falling portions of waveforms viewed at relatively slow sweep rates, the high trace intensity required (due to the intensity difference between the horizontal and the vertical segments) could cause storage target damage.

Avoid repeated use of the same base line position on the screen.

Do not leave a display on the CRT screen (either writing or stored) when the display is not needed.

Do not leave STORE switches pushed in when the storage mode is not needed.

NOTICE TO OWNER

To obviate the risk of damage during transit and facilitate packaging, the owner is requested to remove the power supply plug and NOT send the following items unless they are suspect, should this Instrument be returned to TELEQUIPMENT for servicing.

Manual
Probes
Power Supply Lead
Plug Assemblies

CONTENTS

CHAPTER		Page
1	SPECIFICATION	
	Cathode Ray Tube (CRT)	1/2
	Cooling	1/3
	Horizontal system	1/1
	Outputs, Front panel	1/2
	Power Requirements	1/3
	Size	1/3
	Temperature limits	1/3
	Trigger	1/2
	Vertical System	1/1
	Weight	1/3
2	OPERATING INSTRUCTIONS	
	Controls and Connectors	
	Connectors, input & output ...	2/2
	CRT	2/1
	Horizontal display	2/1
	Sweep	2/1
	Trig Mode	2/1
	Vertical display	2/2
	Operation	2/3
	Pre-operational checks	2/3
3	CIRCUIT DESCRIPTIONS	
	Attenuators	3/1
	Block Diagram	3/1
	CRT	3/3
	EHT Supplies	3/5
	Horizontal amplifier	3/3
	Power supplies	3/6
	Sweep	
	Generator	3/3
	Trigger	3/2
	Unblanking amplifier	3/3
	Vertical amplifier	3/1
4	MAINTENANCE & CALIBRATION	
	Calibration	4/1
	Attenuator	4/4
	Calibrator	4/6
	CRT	4/3

CHAPTER		Page
4	MAINTENANCE & CALIBRATION (cont.)	
	Horizontal amplifier	4/5
	Preliminary procedure	4/2
	Probe	4/2
	Storage Circuit	4/6
	Sweep & Trigger	4/2
	Single Shot	4/5
	Vertical Amplifier	
	D.C. & L.F. setting	4/3
	Pulse response	4/5
	Supply variation	4/2
	X-Y mode	4/5
	General	4/1
	Checks	
	Gain	4/1
	Sweep Speed	4/1
	Mechanical	4/1
	Access to interior	4/1
	CRT	
	Removal	4/1
	Fitting	4/1
	Location of Pre-set controls ...	4/1
5	COMPONENT LIST	
	Assemblies	5/16
	Component	5/2
	Mechanical	5/14
6	CIRCUIT DIAGRAMS	Figure
	Attenuator	2
	Block Diagram	1
	Component reference	
	PC Nos 110 & 112	11
	PC No 111	12
	Power supply	10
	Storage	9
	Timebase	6
	Trigger	5
	Unblanking amplifier	6
	'X' amplifier	6
	'Y' amp. Input & Channel switching ...	3
	Output & Trigger pre-amp. ...	4
	Time/Div	7

CHAPTER I
SPECIFICATION

1.1 VERTICAL SYSTEM

Operating modes

Channel 1
Channel 2 (normal or inverted)
Channels 1 & 2
- Alternate
- Chopped (at 150 kHz approx.)
- Summed

X – Y

3 dB bandwidth
- D.C. Coupled
- A.C. Coupled
- Risetime

x1	x10
D.C. – 10 MHz	D.C. – 8 MHz
2 Hz – 10 MHz	2 Hz – 8 MHz
35 ns nominal	44 ns nominal

X – Y

CH1 is vertical input, CH2 selected via timebase switch as horizontal input

- Bandwidth (– 3 dB) — D.C. – 1 MHz
- Phase error — Less than 1° at 10 kHz

Deflection factors

- Calibrated (12 ranges 1-2-5 sequence) — 10 mV – 50 V/div ± 5%
- Gain X10 — 1 mV/div – 5 V/div
- Uncalibrated – with variable — Complete cover between sequence and to 125 V/div

Input impedance — 1 MΩ and 47 pF approx.

Maximum input – D.C., peak A.C. or sum of — 400 V

Maximum H.F. deflection at 10 MHz — 4 div

1.2 HORIZONTAL SYSTEM

Sweep generator

Sweep rates

- Calibrated (23 ranges 1-2-5 sequences) — 2 s – 100 ns/div ± 5% (without expansion)
  400 ms – 100 ns/div ± 8% (with X5 expansion)
- Uncalibrated (with variable) — Complete cover between sequence and to 5 s/div
- Repetitive / Single Shot — Selected by switch

External horizontal amplifier

- 3 dB bandwidth — D.C. – 1 MHz
- Risetime — 350 ns
- Deflection factors — 200 mV/div or 1 V/div approx.

Input impedance — 100 kΩ and 30 pF approx.

Maximum input – D.C., peak A.C. or sum of — 400 V

1.3 TRIGGER

Coupling	A.C. or D.C.
Source	CH1, CH2, alternate or external
Internal	
Amplitude – Automatic	0.25 div 40 Hz to 1 MHz } Alternate
Trigger level	0.25 div D.C. to 1 MHz } 1.0 div
	rising to 0.5 div at 5 MHz
HF	1 div from 1 MHz to > 10 MHz
External	
Amplitude	250 mV peak to peak
Impedance	100 kΩ parallel with 30 pF

1.4 CATHODE RAY TUBE (CRT)

Display area	8 x 10 cm
Phosphor Standard	P31
Overall accelerating potential	3.5 kV approx.
External intensity modulation	
Coupling	A.C. to Cathode
Amplitude, peak	50 V maximum
	20 V for perceptible modulation at average brilliance
Time constant	10 nF and 10 kΩ
Store Mode	1 hour
Erasure	Manual or automatic at end of sweep
Erase time	0.25 s. approx.
Writing rate	
Enhance off	25 div/ms
on	250 div/ms
Variable enhancement	25 – 250 div/ms

1.5 FRONT PANEL OUTPUTS

Calibrator, peak to peak	500 mV square wave at supply frequency
Accuracy	2%
Sweep sawtooth	
Coupling	D.C.
Amplitude peak to peak	10 V approx.
Minimum load	47 kΩ
Gate out	
Coupling	D.C.
Amplitude, peak to peak	500 mV approx.

1.6 POWER REQUIREMENTS

Voltage	100 – 125 V in 5 V steps 200 – 250 V in 10 V steps
Frequency	48 – 400 Hz
Consumption	100 VA approx.

1.7 SIZE

Height	24 cm
Width	21 cm
Depth	37 cm

1.8 WEIGHT

12.97 kg

1.9 COOLING

Convection

1.10 TEMPERATURE LIMITS, ambient

Operating	– 5 to +40°C approx.
Non-operating	–25 to +70°C approx.

CHAPTER 2
OPERATING INSTRUCTIONS

2.1 FUNCTION OF CONTROLS AND CONNECTORS

Controls are situated on the front panel except when specified

2.1.1 CRT

BRILLIANCE	varies the intensity of the display.
FOCUS	controls the definition of the display.
ASTIG/ POWER ON-OFF	is used in conjunction with FOCUS for best overall definition.
BEAM LOCATE	when pressed a spot will appear in the non-store area 2 mm approx to the left of the start of the trace. This facility is provided for vertically positioning the trace without storing it.
STORE	when pushed in the trace can be stored for up to one hour. Note: Change of mode causes the Store to be cleared and the stored traces destroyed.
ENHANCE	when pushed in, the writing speed is increased.
VARIABLE	controls the writing speed up to X10 approx. Note: This facility reduces the contrast and hence storage time.
INTEGRATE	this facility is provided for storing a recurrent signal at high writing speeds.
ERASE	
MANUAL	when depressed, the stored trace is removed.
AUTO	when switched to AUTO, the stored trace is automatically erased at the end of each sweep and the timebase armed for the next input signal.
TRACE ROTATION	situated on the rear panel. Rotates the trace(s) about the horizontal axis of the CRT and used to align the trace(s) with the horizontal graticule divisions.

2.1.2 HORIZONTAL DISPLAY

POSITION	varies the location of the trace(s) in the horizontal axis, when *not* in the X-Y mode.
FINE	acts as a more sensitive position control as well as the X5 horizontal gain switch. When pulled out in the X5 position, all sweep speed calibrations must be divided by 5. In the X-Y mode, FINE inoperative, X5 gain operative.

2.1.3 SWEEP

TIME/DIV	controls the speed of the main sweep. The sweep rates indicated are only valid if VARIABLE is fully clockwise and FINE position is pushed in for X1 gain. If FINE position is pulled out and VARIABLE is at CAL, the calibrations should be divided by a factor of 5 to ascertain the sweep speed.
VARIABLE	enables speeds between that indicated by TIME/DIV and the next lower speed to be selected. The control also selects X-Y operation when the knob is pushed in.
LEVEL	selects that point on the signal waveform at which the sweep starts. In the AUTO position, ref 2.1.4 below, the trigger oscillates recurrently at a low repetition rate in the absence of a triggering signal; when a suitable signal is applied, the circuit is automatically triggered at the mean level of the input waveform.
STABILITY	controls the sensitivity of the sweep generator; turned fully anti-clockwise prevents the sweep from running, while fully clockwise causes the sweep to free run.
SINGLE SHOT	assist in viewing or photographing a non-recurrent signal. If a recurrent signal is applied to the oscilloscope, in the SINGLE-SHOT mode, the sweep will run once each time RESET is pressed, when *not* in the X-Y mode. When a recurring signal is applied, the timebase should be locked by using STABILITY and LEVEL.

2.1.4 TRIG MODE

TV F and TV L	facilitates triggering from TV field (frame) or line pulses; the LEVEL control may require adjustment for best results. Polarity relates to the sense of video modulation.
HF	should be depressed for synchronization from high-frequency signals. LEVEL can be adjusted for a locked sweep.

±	provide triggering from the positive or negative-going slope of a waveform.
AUTO	obtained by releasing DC and AC buttons.
INT and EXT	enable the sweep to be triggered either internally from the vertical amplifier or externally.
AC or DC	relate to the coupling of the trigger circuit. For very low input frequency DC should be selected.

2.1.5 VERTICAL DISPLAY

OFF-ON	release of these buttons, switches off the channel concerned. If both channels are switched off, a straight line trace results which cannot be shifted by the POSITION controls, except when in the X-Y mode.
INT TRIG	selects triggering from either or both channels. When alternately triggering from both channels both INT TRIG buttons should be released; the displays should be partially superimposed.
CHOP-ALT-SUM	provide three display modes for the vertical channels. In the CHOP mode, the channels are alternately switched on and off at a frequency of about 150 kHZ; this mode is suitable at the lower sweep speeds. In the ALT mode, each channel is alternately displayed for the duration of a sweep; this mode is preferable at higher sweep speeds. In the SUM mode, the display is the addition of the individual signals: CH1 POSITION is used to shift the trace, CH2 POSITION is a Fine shift in the SUM mode. If INVERT is depressed, the resultant display is the difference between the two input signals.
POSITION	displaces each trace in the vertical direction except when both channels are off. In the X-Y mode irrespective of button settings CH1 provides a vertical shift and CH2 a horizontal shift.
INVERT-NORMAL	the setting of this button determines whether the CH2 signal is displayed in the same polarity as the input signal or inverted. The inverted setting is used to display the difference between two signals in the SUM mode.
VOLTS/DIV	provides twelve steps of attenuation of each channel's input signal. Calibrated sensitivities are only valid when VARIABLE is fully clockwise.
VARIABLE	enables all deflection sensitivities between that selected by the VOLTS/DIV switch and the next below to be covered. The control must be fully clockwise for a calibrated display; for X10 gain the knob should be pushed in.
DC-GND-AC	selects the input signal coupling. In the DC position, the signal from the INPUT connector is coupled directly to the attenuator. In the AC position a capacitor is inserted in series. In the GND position the input to the attenuator is grounded and socket disconnected; this position enables the 0 V D.C. level of a trace to be ascertained.

2.1.6 INPUT AND OUTPUT CONNECTORS

1. INPUTS

BNC	connectors are linked to the vertical channel attenuators via the DC-GND-AC switch described above.
EXT TRIG & EXT X	there is a BNC connector in the sweep section of the front-panel. This enables either external triggering signals to be applied, or in the EXT condition of the VARIABLE speed it provides the EXT X input. The connector is D.C. coupled to both trigger and horizontal amplifier circuits. An external blocking capacitor may be required to remove the D.C. component. Input resistance is 100 kΩ. A X5 amplification of the horizontal display is obtained by pulling out FINE position. If a dual-trace display is required on EXT X, the vertical display mode must be set to CHOP, the ALT and SUM modes will provide only one trace.
Z MOD	at the rear of the instrument and connected via an isolating capacitor to the CRT cathode. A negative-going signal is thus necessary to intensify the trace while a positive-going signal will blank it.

2. OUTPUTS

CAL	socket provides a waveform for checking the calibration of the vertical channels. The repetition rate is at supply frequency.
GATE OUT	provides a fast-edged positive-going rectangular pulse lasting for the duration of the sweep. The gate out signal or 0.5 V peak to peak 1 kHz squarewave is used for calibrating probes as follows. 1. Connect the probe to INPUT 1. 2. Set VOLTS/DIV to .1 (X10), 10 mV (X100). 3. Turn VARIABLE fully clockwise.

4. Set TIME/DIV to 1 ms.
5. Connect probe tip to the GATE OUT.
6. Adjust the probe trimmer for a square corner on the leading edge of the display as follows:

In the HZ1B probe, a screwdriver adjustment is provided through a hole in the probe body.

The GE81000 is calibrated as follows:

1. Slacken the narrower of the two knurled rings at the BNC connector end of the probe cable.
2. Rotate the adjacent broader ring until a square corner is obtained.
3. Tighten the narrow ring without disturbing the broad ring.

If a 1kHz squarewave is used, the amplitude should be about 500 mV and a few cycles of the waveform should be displayed. The above calibration procedure should be followed with X10 probe tip applied to the squarewave generator output. The compensation should be checked if the probe is transferred to INPUT 2.

SAWTOOTH — provides a positive-going ramp waveform when the sweep is running. A recurring sawtooth is produced when the STABILITY is fully clockwise for the sweep generator to free-run. The resistance of an applied load should exceed 47 kΩ to avoid loading the sweep generator.

3. GND — this is connected to the chassis of the instrument.

2.2 PRE-OPERATIONAL CHECK

2.2.1 Before connecting the instrument to the supply, check that the rear voltage-selector plug is indicating the local supply voltage or the nearest value to it. Check also that the fuse fitted is 1 A for 100-125 V operation or 500 mA for 200-250 V.

NOTE:— The 3-core supply lead is alternatively colour coded as follows:

Line	Neutral	Earth (Chassis)
Brown Black	Blue White	Green/Yellow Green

2.2.2 Set the controls as follows:

1. CRT

BRILLIANCE	Mid Position
FOCUS	Central
ASTIG	Fully anti-clockwise
STORAGE	Off
TRACE ROTATION	As set

2. HORIZONTAL DISPLAY

POSITION	Central
FINE	Central and pushed in

3. SWEEP

STABILITY	Fully clockwise
TIME/DIV	5 ms
VARIABLE	Fully clockwise
LEVEL	Any position
TRIG MODE	All buttons out
SINGLE SHOT	REP.

4. VERTICAL DISPLAY CH1 & CH2

OFF-ON	ON
INT TRIG	1
CHOP ALT-SUM	CHOP
POSITION	Central
INVERT-NORMAL	NORMAL
VOLTS/DIV	0.2 V
VARIABLE	Fully clockwise
DC-GND-AC	GND

2.3 OPERATION

1. Plug into the supply and switch on by the ASTIG. LUM.
2. Allow a few minutes for warm up then adjust CRT and POSITION controls for a two-trace display.
3. Adjust TRACE ROTATION if necessary to make the traces horizontal.
4. Apply the supply frequency squarewave from the CAL 500 mV peak to peak socket to both INPUT connectors via co axial leads and switch both DC-GND AC to DC.
5. Rotate STABILITY anti-clockwise to lock display.
6. If the supply frequency is 50 Hz, 2.5 cycles of the calibrator waveform will be displayed, each display being 2.5 div in amplitude.

CHAPTER 3
CIRCUIT DESCRIPTIONS

3.1 BLOCK DIAGRAM

3.1.1 This chapter will assist the reader to comprehend the circuitry of the DM64. By referring to the Block Diagram reference Figure 1 the reader will see the interfaces of the various circuits and signal paths, which will be dealt with in detail later.

3.1.2 The signal is fed via the Attenuator to the Vertical Amplifier. Its description covers the function of the 'Y' input pre-amplifiers and Output amplifier, Channel switching multivibrator and trigger pre-amplifier. The output is fed to the 'Y' plates of the CRT with a portion of it being fed to the trigger network.

3.1.3 The Trigger circuit provides pulses of suitable amplitude and polarity to trigger the timebase from internally or externally derived waveforms.

3.1.4 The Timebase description deals with the ALT pulse and Sweep generators, Gating and Hold-off bistables. This stage determines the start and finish of each sweep and generates a sawtooth waveform for the horizontal amplifier.

3.1.5 The Horizontal amplifier description covers the 'X' output, which amplifies the sawtooth waveform or an external 'X' signal and applies it in push-pull to the 'X' plates of the CRT.

3.1.6 The Unblanking amplifier description covers the Chop and Sweep retrace blanking amplifiers. The output being fed to the CRT g_2 electrode.

3.1.7 The Calibrator and E.H.T. are included with the description on the Power supplies, the function of the former is to provide a calibrated peak to peak squarewave at power-line frequency for the purpose of checking the vertical amplifier and timebase calibration.

3.1.8 The CRT description covers the store and non store switching, manual and auto erase generators, enhance generator and collimation correction for the storage section of the CRT Also included is a brief description of the manner in which the CRT actually stores information.

3.2 ATTENUATORS

The signals to be observed are connected to the instrument via BNC sockets and switch S901, reference Figure 2. Two identical attenuators each comprising four frequency-compensated resistive dividers with ratios of 100:1, 10:1, 5:1 and 2:1. These are switched singly or in tandem; C902, C905, C908 and C912 serve to standardize the input time constants; C904, C907, C911 and C914 compensate the respective dividers.

3.3 VERTICAL AMPLIFIER ('Y'-AMPLIFIER)

The circuits of channel 1 (CH1) and channel 2 (CH2) are identical with zener diodes D604, D611 providing stabilized positive and negative voltages and diodes D607, D608 the shift voltages CH1 is described below reference Figure 3. Where references are made to CH2, CH2 will be quoted.

3.3.1 The output from the attenuator is fed to the gate of TR601 via a protection circuit C601, C602, R601, R602a, R602b, and R603 which prevents excessive voltage damaging the input FET.

3.3.2 TR601 and TR602 form a paraphase amplifier with their sources long-tailed through TR628. R624 provides variable gain control. Compensation is provided by R625 for trace movement caused by varying R624. R622 compensates for supply voltage variation in conjunction with R626, R630, R632 and D604. Neutralization is effected by C604.

3.3.3 The output from the FET input stage is taken via emitter followers TR603 and TR604 to a gain stage TR605 and TR606. In the emitter circuit R617 sets the X1 channel gain and R618 the X10. The collector outputs are connected to the switching stage, TR609 and TR611, via emitter followers, TR607 and TR608, which provide in push-pull the channel trigger signal. The Miller capacities of the above gain stage are neutralized by C603 and C609.
In CH2 the emitter followers TR624 and TR625 provide the horizontal signal in the X-Y mode.

3.3.4 TR609 and TR611 form a long-tailed pair with C606 and R614 providing H.F. compensation. Their output feeds a shunt feedback amplifier TR612 and TR613. The feedback resistors are split into pairs, R644, R650 and R658 R661; with H.F. compensation being provided by C621, R656, C619, R655, connected between the junctions of the above pairs of resistors.

3.3.5 The output from TR612, TR613 is fed to the emitter input of the output stage, TR752 and TR753, which drives the 'Y' plates of the CRT Fig.8.
A portion of the output is taken via a balanced divider, R771, R773 and R772, R774 to switch, S751, which switches either the above portion of the signal or the channel signal from the emitter followers, TR607 and TR608, to a long-tailed pair TR755, TR757, which drive the Trigger circuit.

3.3.6 The CH2 output from TR624, TR625 also drives a separate long-tailed pair, TR754, TR756 which acts as a horizontal pre-amplifier in the X-Y mode. The X-Y gains are equalized with R787. The outputs from TR754, TR756 collectors drive the diode switching matrix in the horizontal output amplifier.

3.3.7 Channel switching is carried out by TR614 and TR615, which act as a bistable in the ALT mode and a free-running multivibrator in the CHOP mode the current being provided via a long-tail TR616.

3.3.8 In the ALT mode a negative-going pulse coinciding with the start of the sweep flyback is fed, via D606 or D609, to the above bistable causing it to switch. When TR614 is conducting, it passes current from the switching stage, TR609 and TR611, allowing the CH1 signal to pass to the shunt feedback amplifier, TR612 and TR613. At the same time TR615 is off, its collector rises to 16 V approximately taking the emitters of CH2 switching stage, TR626 and TR627 with it and so cutting off the current. Diodes D610 and D612 prevent the base-emitter junctions from breaking down in the reverse condition.

3.3.9 In the CHOP mode, R664 and R648 are returned to H.T. via R639 and R649, forming an astable multivibrator. The frequency is mainly determined by R664, R648, C613, C622, R647, R663, R639 and R649.

3.3.10 In the SUM mode, the current supplied via TR616 is switched off, so both TR614 and TR615 are non-conducting. Both switching stages, TR609, TR611 and TR626, TR627 are required to be on, so extra current is bled from the 115 V line via R637 and R638. Current flows through the switching stages, via R646 and R662 through R673 to earth. Hence these signals are added at the bases of TR612 and TR613. CH2 signal can be inverted by switch, S604, to provide addition or subtraction of the two signals. Also in the SUM mode, CH1 POSITION becomes a coarse shift control. CH2 POSITION being the very fine shift control.

3.3.11 The table below shows the state of the switched components for all switch combinations; followed by a resume on the part of circuit activated.

Condition A denotes R637, R638 connected to + 110 V.
Condition B denotes TR616 conducting.
Condition C denotes R673 connected to junction R646/R662.

		ALTernate			CHOP			SUM			X–Y		
CH1	CH2	A	B	C	A	B	C	A	B	C	A	B	C
ON	OFF	NO	YES	NO	NO	YES	NO	NO	YES	NO	NO	NO	NO
OFF	ON	NO	YES	NO	NO	YES	NO	NO	YES	NO	NO	NO	NO
ON	ON	NO	YES	NO	NO	YES	NO	YES	NO	YES	NO	NO	NO
OFF	OFF	NO	YES	NO	NO	YES	NO	NO	YES	NO	NO	NO	NO

1. CH1 On, CH2 Off.

TR614, TR609 and TR611 are conducting, this feeds the output of TR609 and TR611 to the bases of TR612 and TR613; TR626 and TR627 being reversed biased by the potential at TR615 collector.

2. CH1 Off, CH2 On.

TR615, TR626 and TR627 are conducting, so only the output of TR626 and TR627 may pass to the bases of TR612 and TR613; TR609 and TR611 being reversed biased by the potential at TR614 collector.

3. CH1 On, CH2 On. ALTERNATE.

TR614 and TR615 are connected to form a bistable circuit. At the end of each sweep, a negative-going pulse appears at the junction D606/D609 which reverses the state of the bistable. Hence TR614 and TR615 conduct alternately and allow the outputs of CH1 and CH2 alternately to reach the bases of TR612 and TR613.

4. CH1, CH2 CHOPPED

R648 and R664 are returned to H.T. via R639 and R649 to form an astable multivibrator, which free runs at 150 kHz approx. Thus the outputs of CH1 and CH2 are successively switched into TR612 and TR613 at 150 kHz. At each transition a pulse is fed from the emitters of TR614 and TR615 via C642 to the unblanking amplifier Fig.6, which blanks the CRT beam and thus provides automatic transient blanking in the chopped mode.

5. CH1, CH2 SUM.

The tail of the multivibrator and R633 are disconnected; TR614 and TR615 are non-conducting; R673 is connected to ground providing a current path for both channels simultaneously; TR609, TR611, TR626 and TR627 are conducting; extra current being fed to their collectors, via R637 and R638 from the + 110 V line, to maintain correct conditions. CH1 and CH2 may be used as a summing or differential (with INVERT pressed) amplifier. In this mode, the CH1 POSITION control provides a coarse shift, and CH2 POSITION control provides a very fine shift control (reference 3.3.10).

6. CH1 Off, CH2 Off.

TR614 and TR615 are non conducting, preventing outputs from either CH1 or CH2 from reaching TR612 and TR613.

7. X-Y

When the X-Y switch is selected, the circuit is connected for X-Y operation as follows, regardless of any vertical amplifier mode switching. R641 is returned to ground, ensuring CH1 signal is connected to TR612 and TR613; TR626 and TR627 are biased off, TR616 is non-conducting and the junction R646/R662 is returned to H.T.

3.4 SWEEP TRIGGER

The bases of trigger input amplifiers TR2 and TR3, reference Figure 5, are fed with internal or external trigger signals via switch, S4, which selects the source from either the collectors of TR753 and TR754 in the vertical amplifier or TR1 the external trigger amplifier. S2 selects the polarity of the signal on which the triggering occurs.

3.4.1 When switched in by S3a or S3b, R15, the LEVEL control varies the base potentials of TR2 and TR3 in antiphase. This alters the quiescent voltage on the base of TR4 and D.C. level of signal required to trip TR4 and TR5.

3.4.2 When S3a and S3b are open in the AUTO position, feedback is applied from TR4 collector via R27 and R9 to TR2 base and from TR5 collector via R26 and R23 to TR3 base. This feedback causes TR2, TR3, TR4 and TR5 to oscillate, in the absence of a trigger input, at a low frequency primarily determined by C11, R26 and R27. Input signals are A.C. coupled only and override the above oscillation, causing the circuit to lock to the input frequency. The trigger sensitivity is set by R34, this adjusts the hysteresis of TR4 and TR5. R17 is set to provide symmetrical operation of TR2 and TR3.

3.4.3 When S1a and b are in the NORMAL position, TR4 and TR5 form a Schmitt trigger. The constant amplitude rectangular-wave output at the collector of TR5 is

differentiated by C15 and R38. The resulting bidirectional pulses are applied to the series clipper D1, which provides the collector of TR68 in the sweep circuit with negative-going trigger pulses.
In the TV positions of S1a and b, R25 is disconnected from the emitter of TR4; TR4 converts into a sync separator with C12 being switched across R31. TR5 changes into an inverter with decoupling capacitor C16 being switched across the emitter resistors R36, R25 and R34. In the TV F position of S1a, the differentiating time-constant of C15 and R38 is increased by the addition of R39.

3.4.4 With S1c set to HF, R32 is added in series with R34 across C14; this converts TR4 and TR5 into a free-running oscillator whose frequency is adjusted, by R15 the LEVEL control, to synchronise with the H.F. trigger input.

3.5 SWEEP GENERATOR (TIMEBASE)

The sweep generator, reference Figure 6, consists of a Miller integrator TR71 and emitter follower TR72; and also bistables, a gating bistable TR66, TR68 and hold-off bistable TR73, TR74, connected between the Miller output and input.

3.5.1 Initially, for an incoming trigger pulse to fire the sweep the following conditions apply:—

Diodes D67, D68 and TR69 are conducting and clamp the drain of TR71 at + 2.5 V approx. The hold-off bistable is held with TR73 off, TR74 on and the gating bistable with TR66 on, TR68 off.

3.5.2 A negative-going trigger pulse causes TR66 to switch off, TR68 on, and D66 to conduct. Hence current flowing through R84 diverts from D67, D68 to D66. This open circuits D67, D68 and releases the gate of TR71. TR71 drain starts to rise, due to Miller action, taking TR72 base and emitter with it and cutting off TR69. This rising sawtooth voltage passes through D71 until eventually TR73 base becomes sufficiently positive to switch the bistable over. Hence TR74 switches off, TR73 on and the negative voltage step at TR73 collector causes TR68 to switch off and TR66 on. TR68 collector goes positive, switching D66 off, D67 and D68 on; starting the flyback.

3.5.3 Current flows through R84, D67 and D68 into the timing capacitor C_t to commence flyback. When TR72 emitter has fallen sufficiently taking TR69 emitter with it then TR69 conducts and clamps C_t at the initial start potential. This potential is determined by the resistor ratios R85, R86, R94 and R95.

3.5.4 During the flyback period, D71 is off due to the charge on the hold off capacitor C_h. This charge leaks away through R104, R105, R106, R107 and R112 until eventually TR73 switches off, TR74 on; the initial conditions (3.5.1 above) are restored.

3.5.5 When the sweep is switched to single-shot mode, TR73 base is prevented from switching at the end of the flyback and clamped by diode D72. The bistable is switched over by pressing RESET, this applies a negative-going pulse to TR73 base and causes the collector current to switch off and TR74 to conduct. The circuit is then ready for the next incoming trigger pulse to fire the sweep.

3.6 HORIZONTAL AMPLIFIER (X-AMPLIFIER)

The horizontal amplifier reference Figure 6, consists of a pre-amplifier TR76, followed by a cascode connected long-tailed pair output stage, TR77, TR78, TR79 and TR81.

3.6.1 The pre-amplifier TR76 is a shunt feedback stage in which the sweep and shift voltages are mixed via R103, R121 on its base. In the EXT X position; TR1 is connected in place of a sweep signal, which converts the high impedance external input into a low impedance suitable for mixing with the shift voltage at TR76 base. The TR76 collector output is fed to the base of TR78 via D76. TR78 and TR79 form the bottom half of a cascode amplifier, their collectors driving the emitters of TR77 and TR81; tail current being supplied via TR82.

3.6.2 Gain control is provided in the X1 condition by R132, in the X5 position by R131. The output from TR77 and TR81 collectors driving the CRT "X" plates.

3.6.3 In the sweep and EXT X positions D76 and D81 are conducting; D77 and D82 are not conducting, the signal being fed to the base of TR78 with D75 and D79 not conducting. D74 and D78 are conducting shorting the collectors of the X-Y pre-amplifier TR751 and TR752.

3.6.4 In the X-Y mode D74 and D78 are not conducting, D75 and D79 are conducting allowing the push pull output from CH2 to be fed to the bases of TR78 and TR79. Also D76 and D81 are not conducting; D77 and D82 are conducting shorting out the signal on TR76 collector.

3.7 UNBLANKING AMPLIFIER

The amplifiers for unblanking comprise TR65, TR67 and for chopped blanking TR62 and TR64, reference Figure 6.

3.7.1 In the absence of a sweep TR66 conducts, causing current to flow through TR65 making the TR65 collector, the TR67 emitter and the CRT Mod Plate electrode negative with respect to the CRT A_1 electrode so blanking the trace.

3.7.2 When the sweep starts TR66 switches off; TR65 current ceases; hence its collector goes to h.t. causing TR67 emitter and CRT Mod Plate to follow. The potentials of A_1 and Mod Plate electrodes are equalized so unblanking the trace.

3.7.3 Chopped blanking pulses are fed from the vertical amplifier via C642 to the cascode circuit TR62 and TR64, which amplifies the pulse. The collector of TR64 falls; allowing D64 to conduct and pass blanking pulses, via TR67 to the CRT Mod Plate electrode to blank the trace.

3.8 CRT CIRCUIT

The CRT is of the direct viewing bistable storage type and contains special storage electrodes additional to a conventional CRT To make the circuitry comprehensible two figures are included in this manual. Figure 8 shows the conventional mode circuit. Figure 9 the storage.

3.8.1 The storage circuit provides the voltage levels necessary to operate the flood guns, collimation electrodes, target backplate, and erase generators. Additional circuitry includes the enhance generator, which permits faster single sweeps to be stored and the integrate switch which permits a stored image of a number of repetitive sweeps, each of which are too fast to store alone as a single sweep.
Fig. 1 a block diagram includes the storage circuit.

3.8.2 Storage Basic Operating Principles

The storage target backplate (STB) collects the secondary electrons emitted by the insulator surface, when the insulator is bombarded with high energy electrons from the writing gun. This stored positive charge on the insulator is then used to control the flow of flood gun electrons to a phosphor screen, in order to produce a visual image.

3.8.3 The flood guns provide low energy electrons directed in a large cone towards the screen, the collimation electrodes shape the electron beam to provide uniform coverage of the STB.

3.8.4 The operating level of the tube, that is the storage or non-storage mode, is determined by the potential difference between the STB and the flood gun cathodes.

3.8.5 In the storage mode, the following states are required to exist in sequence.

1. Ready to write. The insulator surface of the STB tends to discharge down towards the flood gun cathodes, such that the flood gun landing energy is not sufficient to illuminate the phosphor in the target.

   The target is now ready to write.

2. Writing. The storage target is scanned by high energy electrons from the writing cathode. These electrons cause secondary emission to occur over the scanned area and the bombarded surface charges sufficiently positive to switch over to a higher voltage stable state and remains in this state after the writing gun excitation is removed.

3. Viewing. In this written state, the potential difference between the flood gun cathodes and the STB has increased due to the positive charge on the insulator. The flood gun electrons now penetrate the written area and illuminate the phosphor. This visual display will persist as long as the flood beam is allowed to continue to land on the insulator surface.

   At high sweep rates, the writing beam energy is not sufficient to cause the insulator to switch to the upper voltage stable state, so when flood gun electrons land on the target they discharge the insulator down to the flood gun cathode potential.
   Hence, storage is a function of writing speed.

4. Erasure. When the stored display is no longer required, a positive pulse is applied to raise the whole STB voltage above the writing threshold, so that the whole area is written with flood gun electrons The pulse then goes negative and as the voltage gradually returns towards zero, the target is charged towards the ready to write threshold and the whole procedure can be repeated.

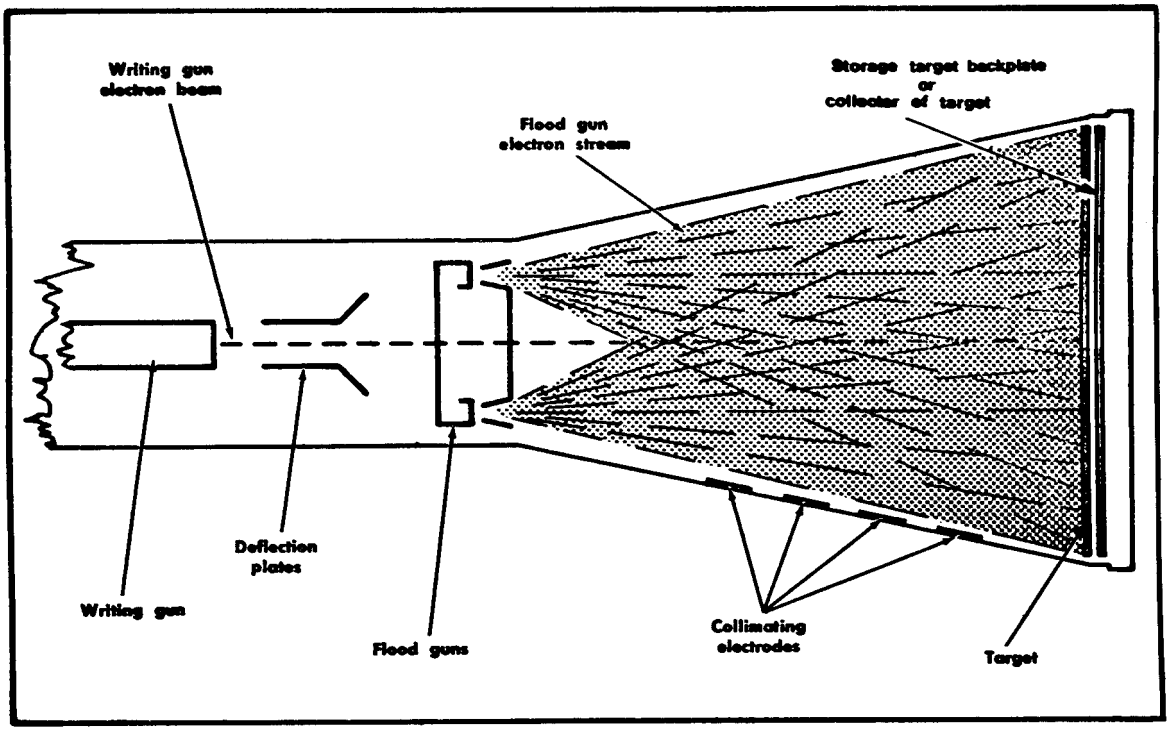

PLATE.1. Storage Tube.

3.8.6 Circuit Description:

The circuit, reference Figure 9, comprises three triggered monostable pulse generators; enhance TR1001, TR1002, manual erase TR1003, TR1004 and auto erase TR1007, TR1009. The outputs from these circuits are connected, via the erase amplifier TR1005, TR1006, to the CRT STB electrode. Additionally D.C. supplies are provided for the collimation electrodes CE1 to CE5.

3.8.7 In the NORMAL (non-store) condition of the CRT, the base of TR1005 is connected to a fixed potential. TR1005, TR1006 are connected as a single stage shunt feedback amplifier; the D.C. output level sets the STB potential at approximately 75 V.

3.8.8 When switched to STORE mode, the base of TR1005 is connected to a resistive mixing circuit comprising, the D.C. level adjustment R1026, via R1028, the erase generator output from TR1004 via R1029 and the enhance generator output from TR1002 via R1031. The STB electrode resides at a potential of approximately 150 V.

Note: These potentials will vary from instrument to instrument.

3.8.9 The ENHANCE and AUTO ERASE monostables are triggered by a pulse from the sweep generator that occurs at the start of the flyback period. This pulse is shaped by TR1000 and applied via C1001 and C1014, to the respective monostables.

The MANUAL ERASE is applied via S1004a. A negative pulse is applied to the base of TR1003 causing it to switch off, TR1004 to switch on and bottom. The circuit will switch back after a period determined approximately by C1007 and R1017; the collector of TR1004 will then rise until it is clamped by D1007. When TR1004 switches on, it also discharges C1008. Hence at the end of the pulse period C1008 will charge towards −100 V line until clamped by D1008 at −14 V.

3.8.10 The waveform at TR1005 base is the sum of the D.C. level, a negative-going rectangular pulse of approximately 14 V amplitude from the TR1004 collector followed by an exponential decay back to −14 V approximately from the negative side of C1008.

3.8.11 This signal is inverted and amplified by the shunt feedback stage TR1005, TR1006 and applied to the STB electrode of the CRT. At the same time, the emitter of TR1006 drives the bootstrap emitter follower TR1008 via the zener diode D1014. The signal voltage passes through C1013 cutting off D1009 so disconnecting the +300 V line. The collector of TR1006 rises due to bootstrap action taking the collimation electrodes CE4, CE5 positive. This is done to maintain correct collimation of the flood beam during the erase period.

3.8.12 The AUTO ERASE generator is triggered by a negative pulse occurring at the start of the sweep flyback. The sequence of events for auto-erasure is to first put the time-base into the single sweep mode. This is done automatically when switching to auto-erase, then the sweep flyback switches the auto-erase generator to produce a negative-going rectangular pulse. The leading edge of the pulse fires the erase generator to erase the display and at the end of the pulse period, when erasure is complete the back edge of the pulse resets the sweep; ready for the next input signal to trigger it.

The negative pulse from C1014 switches TR1007 off, TR1009 on; the circuit recovery rate being determined approximately by C1015, R1045. The output from the TR1009 collector is differentiated and the positive edge removed by D1024. The negative edge from D1024 is then used to fire the erase generator TR1003, TR1004. The positive output from TR1009 collector is used to reset the sweep so that it fires on the next input signal.

3.8.13 The ENHANCE generator is also fired by a pulse occurring at the start of the flyback; a variable width rectangular pulse is produced which is fed to the base of TR1005, so raising the potential of the STB. This increases the writing speed of the CRT and also the background level, so reducing the contrast of the stored image. If the Manual or Auto Erase generators are also operating, then the enhance pulse sits on top of the erase pulse amplitude and assists in clearing the stored information.

3.8.14 To increase the writing speed still further with a recurrent waveform, the flood gun cathode can be open circuited by the INTEGRATE switch S1003. This switches off the collimated flood beam and allows successive sweeps to build up the stored charge on the insulator until the insulator is able to switch to its higher voltage stable condition. Then if the INTEGRATE switch is released; the flood beam switches on, permitting the stored image to be viewed.

3.9 EHT SUPPLIES

3.9.1 The negative supply voltage, reference Figure 8, for the CRT cathode is supplied by a class 'C' oscillator circuit consisting of TR302, transformer T301 and a current sensing amplifier TR301 and TR303. The oscillator runs at approximately 40 kHz with the secondary of the transformer being rectified by D302 and C303 serving as a reservoir capacitor. This produces a voltage of −3.2 kV relative to chassis.

3.9.2 The potential divider chain between the −3.2 kV and the + 110 V lines provides the necessary voltages for the CRT writing gun electrodes and senses the output of the regulator circuit. Any change in the regulator output induces a current change in the potential divider chain. This current change is amplified by the current amplifiers TR301 and TR303 to control the automatic self bias for the class 'C' amplifier TR302. This is developed across C301 to vary the conduction angle of the class 'C' amplifier and maintain a constant voltage output.

3.9.3 The zener diodes D306 and D304 maintain constant voltages across the Focus circuit, so as to make the current in the potential divider chain independent of the Focus control, which is achieved by controlling the photo-energy incident on the photo-transistor PTR304 from the light source LP 301.

3.9.4 TR307, R315 and R319 form a clipper circuit which clips the negative-going portion of the E.H.T. oscillator at the collector of TR307. This clipped signal is then peak to peak rectified by D306 & D308 and superimposed onto the 3.2 kV line to control the bias on the grid of the CRT. R319 varies the clipping level and hence alters the brightness of the trace.

3.10 POWER SUPPLIES

3.10.1 The power supply circuit is shown in Fig. 10. All the rectifiers used are silicon semiconductors thus ensuring a minimum of delay for the rectified voltages to obtain their maximum value. A power transformer T401 provides all the required voltages from its secondaries. The primary may be adjusted, by a means of a link input voltage selector panel, for operation on alternating voltages from 100–125 V and 190–240 V at 50–60 Hz.

3.10.2 One secondary winding, 14-0-14 V, is full wave rectified twice and supplies ± 12.5 V and ± 14 V. Another full wave rectifier provides D.C. for the CRT flood gun heater. One half of the winding provides power for the graticule illumination bulbs.

3.10.3 A second winding, 100-0-100 V, also with two full wave rectifiers supply ± 100 V.

3.10.4 Two additional floating windings drive bridge rectifiers to supply the + 180 V and + 300 V lines

3.10.5 All lines are R-C smoothed, to provide low ripple supply voltages for the relevant circuit boards

3.10.6 The 500 mV peak to peak square wave calibrator output is developed across R407 by using the 14 V A.C. output from the transformer to switch D416 alternately on and off. D416 is in series with R408 and R411 to a 6.2 V zener diode. R411 sets the current through the chain and consequently the voltage developed across R407.

CHAPTER 4
MAINTENANCE AND CALIBRATION

4.1 GENERAL

4.1.1 The entire solid-state design of the instrument should render frequent re-adjustment of the internal preset controls unnecessary; however, to ensure full measurement accuracy, it is desirable to make an occasional check, reference 4.3.2, 4.3.3. on the vertical amplifier sensitivity and timebase sweep speed. The internally generated 500 mV peak to peak calibration waveform may conveniently be used for these checks.

4.1.2 Should a more complete calibration be required, such as in the event of transistor replacement, reference should be made to the appropriate procedure in the Calibration paragraph of this Chapter.

Before it is assumed that a fault condition exists, control settings should be verified with reference to the Pre-Operational checks,paragraph 2.2.

4.2 MECHANICAL

4.2.1 LOCATION OF PRESET CONTROLS

Attenuator trimmers are accessible from the left hand side, front, after the covers have been removed. PC.110 and PC.111 which carry the circuits for the timebase, power supplies and storage are situated on the right hand side; PC.115, the vertical amplifier is on the left hand side and PC.123, the E.H.T. is below the rear of the CRT. The boards are marked with a legend to facilitate component identification.

4.2.2 ACCESS TO INTERIOR

The cabinet sides are removed as follows:

1. Disconnect the power supply.
2. Loosen the two handle-clamp securing screws.
3. Ease the top of each side outwards.
4. Unhook the bottom of each side from the locating slots. The chassis base cover plate is secured by six fixing screws, one at each corner and one half-way along each side.

4.2.3 CRT REMOVAL

1. Remove both cabinet sides, as described above.
2. Remove the rear cover (four screws).
3. Unplug the 14 pin CRT base connector.
4. Unplug the five pin connectors (top, rear PC.111).
5. Remove the three screws holding the mumetal screen.
6. Unplug the trace rotation coil connector (rear PC.115).
7. Remove the CRT and screen from the instrument by moving them towards the rear to clear the front panel; moving the forward end of the CRT to the left. The CRT and screen may be removed with the cableform attached.
8. Remove adhesive tape and rear location moulding from the CRT.
9. Remove the CRT from the screen.

4.2.4 CRT FITTING

Reverse the order detailed above 4.2.3. Ensure that the CRT forward end is located in the rubber moulding behind the front panel. If the trace rotation control does not provide an adequate range of adjustment reverse the trace rotation plug.

4.3 CALIBRATION

4.3.1 The following procedure enables a full calibration of the instrument to be accomplished. If any operations are carried out in isolation, regard should be paid to the risk of interaction with other adjustments also to control settings and waveforms applied in earlier steps.

The following tools and equipment shall be required:

1. Calibrator, Telequipment Type C1A or Item 2.
2. Time Marker Generator and an accurate voltage source.
3. Signal Generator.
4. Terminator, 50 Ω. If alternative to 1 above is used, a suitable matching terminator should be used.
5. Variac with a ± 10% facility.
6. Avometer.
7. Oscilloscope with 100 mV/Div sensitivity.
8. Voltmeter with range ⩾3.5 kV.
9. X1 Probe.
10. X10 Probe.
11. Non capacitive trimming tool.
12. Screwdrivers with various width blades.

4.3.2 SWEEP SPEED CHECK

1. Switch CH1 and CH2 on.
2. Set VOLTS/DIV to 100 mV.
3. Turn VARIABLE fully clockwise and release for X1.
4. Set DC-GND-AC to DC.
5. Push FINE for X1.
6. Set TIME/DIV to 10 ms.
7. Turn VARIABLE (speed) fully clockwise.
8. Connect INPUT 1 & 2 to CAL.
9. Adjust STABILITY for locked display.
10. Check Sweep Speed = 1 cycle/2 divs. for 50 Hz supply
    3 cycles/5 divs. for 60 Hz supply
    for 400 Hz supply set TIME/DIV to 1 ms
    check Sweep Speed = 2 cycles/5 divs.

4.3.3 GAIN CHECK

1. Repeat 1 through 5 above.
2. Connect CAL to INPUT 1.
3. Adjust CH1 POSITION, Trigger and Sweep controls for convenient display.
4. Check amplitude = 5 divs. if incorrect adjust R617.
5. Connect CAL to INPUT 2.
6. Adjust CH2 POSITION, Trigger and Sweep controls for convenient display.
7. Check amplitude = 5 divs., if incorrect adjust R691.

NOTE: VARIABLES must remain fully clockwise.

4.3.4 PROBES

Reference 2.1.6, sub-para 2, GATE OUT.

4.3.5 PRELIMINARY PROCEDURE

1. With the instrument disconnected from the power supply, remove the cabinet sides as detailed in 4.2.2.
2. Insert the voltage-selector plug in the rear panel with the arrow indicating the nominal voltage of the local A.C. supply or the nearest value to it.
3. Connect the Oscilloscope's power cable to a Variac. The cores of the cable are alternatively colour-coded as follows.

LINE	NEUTRAL	EARTH (Chassis)
Brown Black	Blue White	Green/Yellow Green

4. Set all preset pots to mid position.
5. Set front-panel controls as follows:

POSITION (CH1 & 2)	Central
OFF-ON (CH1 & 2)	OFF
ALL VARIABLES	fully clockwise
STABILITY	fully clockwise
POSITION (horizontal)	Mid position
FINE	Central and pushed in
All push buttons	Out

6. Connect voltmeter; negative to CRT pin 2, positive to earth.
7. Connect the Variac to the power supply, switch on power supply and allow oscilloscope to warm up.
8. Adjust the Variac to give the same voltage as that indicated by the voltage-selector plug.
9. Adjust BRILLIANCE for reasonable setting.
10. Adjust FOCUS and ASTIG.
11. Adjust R308 to give voltmeter reading of -3200V.
12. Turn BRILLIANCE fully clockwise.
13. Adjust R328 for maximum brilliance.

    NOTE When R328 is correctly adjusted, the BRILLIANCE control should give continuous variation over its range. Over adjustment of R328 simply causes excessive spot swelling with no real increase in the trace brilliance. Also the EHT may change, as indicated by avometer.

14. Adjust BRILLIANCE for reasonable setting.
15. Depress BEAM LOCATE and observe spot appears approximately 2mm to the left of the trace start.

4.3.6 SWEEP AND TRIGGER

1.0 To set auto and trigger sensitivity R17 and R34.

1.1 Set VARIABLE (speed) to EXT X.

1.2 Release all Buttons.

1.3 Press EXT TRIG.

1.4 Set CH1 and CH2 DC-GND-AC to GND.

1.5 Connect TEST Oscilloscope to TR3 collector tag 62.PC110. (Reference Fig 11)

1.6 Set Oscilloscope to 0.1 volts/div and 20 ms/div.

1.7 Turn R34 fully anti-clockwise.

1.8 Adjust R17 to the centre of the range over which a continuous oscillation, at 1 MHz approximately, is observed on the Test Oscilloscope.

1.9 Turn R34 slightly clockwise.

1.10 Reset R17 to the centre of the oscillation range.

1.11 Repeat 1.7 through 1.9 until the oscillation develops into a triangular waveform at 20 Hz approx.

1.12 Adjust R17 and R34 to give a symmetrical waveform of 70 mV peak to peak.

2.0 To set gate potential: R93.

2.1 Connect Test Oscilloscope to Tag 21, PC110.

2.2 Turn STABILITY fully anti-clockwise.

2.3 Turn VARIABLE (speed) fully clockwise.

2.4 Adjust R93 for 2 V negative potential with respect to GND.

3.0 To set sweep length: R106.

3.1 Connect Test Oscilloscope to Tag 23, PC110.

3.2 Turn STABILITY fully clockwise.

3.3 Adjust R106 for a total sweep amplitude of 10 V.

3.4 Disconnect Test Oscilloscope.

3.5 Release EXT TRIG.

3.6 Set CHOP-SUM-ALT to ALT.

4.3.7 VERTICAL AMPLIFIER (supply variation compensation)

1.0 To set CH1 supply variation: CH1 on, CH2 off.

1.1 Set VOLTS/DIV to 10 mV.

1.2 Set DC-GND-AC to DC.

1.3 Connect Calibrator to INPUT 1.

1.4 Set calibrator to 5 mV peak to peak, 1 kHz squarewave.

1.5 Press VARIABLE for X10 gain.

1.6 Set POSITION to centre of range.

1.7 Adjust R642 until trace appears.

1.8 Set R618 for 5 div deflection approximately.

1.9 Adjust STABILITY for free-run trace.

1.10 Set DC-GND-AC to GND.

1.11 Adjust R642 to centralize trace.

1.12 Reduce supply voltage by 10%.

1.13 Note direction, if trace moves in the vertical axis;

1.14 Adjust R622 slightly to move trace in the direction noted in 1.13 above.

1.15 Increase supply to normal.

1.16 Adjust R642 to centralize trace.

1.17 Repeat 1.12 through 1.16 until trace movement is reduced to a minimum, when the Variac setting is varied between ± 10%.

2.0 To set CH2 supply variation: CH1 off, CH2 on.

2.1 Set VOLTS/DIV to 10 mV.

2.2 Set DC-GND-AC to DC.

2.3 Connect Calibrator to INPUT 2.

2.4 Set Calibrator to 5 mV peak to peak 1 kHz squarewave.

2.5 Press VARIABLE for X10 gain.

2.6 Set POSITION to centre of range.

2.7 Adjust R669 until trace appears.

2.8 Set R693 for a 5 div deflection approximately.

2.9 Adjust STABILITY for free-run trace.

2.10 Remove signal by earthing input.

2.11 Adjust R669 to centralize trace.

2.12 Reduce supply voltage by 10%.

2.13 Note direction, if trace moves in the vertical axis;

2.14 Adjust R697 slightly to move trace in the direction noted in 2.13 above.

2.15 Increase supply to normal.

2.16 Adjust R669 to centralize trace.

2.17 Repeat 2.12 through 2.16 until trace movement is reduced to a minimum, when the Variac setting is varied between ± 10%.

2.18 Disconnect Calibrator.

3.0 To check supply fluctuation.

3.1 Switch CH1 on and check CH2 is on.

3.2 Alter Variac setting rapidly between ± 5%.

3.3 Check that both traces do not bounce more than 1mm. If bounce is excessive repeat Op. 1.0 & 2.0 above.

4.3.8 CRT (Geometry)

1.0 To set geometry R1065.

1.1 Connect Signal Generator to INPUT 1.

1.2 Set Signal Generator to at least 100 kHz sinewave.

1.3 Switch CH2 off.

1.4 Set TIME/DIV for close spaced raster, 10 sinewaves/div approximately.

1.5 Push FINE for X1 gain.

1.6 Set CH1 VOLTS/DIV to 10 mV.

1.7 Adjust Signal Generator's amplitude to provide a raster with top and bottom edges just visible in the display area.

1.8 Adjust R1065 for minimum curvature at the edges of the raster.

1.9 Disconnect the Signal Generator.

4.3.9 VERTICAL AMPLIFIER (D.C. and L.F. setting)

1.0 To set CH1 VARIABLE and POSITION balance: R625 and R642.

1.1 Check CH1 on, CH2 off.

1.2 Set VARIABLE fully clockwise.

1.3 Set VOLTS/DIV to 10 mV.

1.4 Set DC-GND-AC to GND.

1.5 Adjust POSITION to align trace with graticule centre line.

1.6 Push VARIABLE for X10 gain.

1.7 Adjust R642 to centralize trace.

1.8 Release VARIABLE for X1 gain.

1.9 Repeat 1.5 through 1.8 until no trace movement occurs when operating VARIABLE.

1.10 Push VARIABLE for X10 gain.

1.11 Turn VARIABLE fully anti-clockwise.

1.12 Adjust R625 to centralize trace.

1.13 Turn VARIABLE fully clockwise.

1.14 Repeat 1.11 through 1.13 until there is no movement when VARIABLE is turned through its range.

2.0 To set CH2 POSITION balance: R669.

2.1 Switch CH2 on.

2.2 Push both VARIABLES for X10 gain.

2.3 Set both DC-GND-AC to GND.

2.4 Turn both VARIABLES fully clockwise.

2.5 Set CHOP-SUM-ALT to ALT.

2.6 Centralize both traces.

2.7 Set CHOP-SUM-ALT to SUM.

2.8 Adjust R669 to centralize trace.

2.9 Repeat 2.5 through 2.8 until no trace movement occurs.

3.0 To set CH2 VARIABLE balance: R701.

3.1 CH1 off. Check CH2 is on.

3.2 Set VARIABLE fully clockwise.

3.3 Set VOLTS/DIV to 10 mV.

3.4 Set DC-GND-AC to GND.

3.5 Adjust POSITION to align trace with graticule centre line.

3.6 Push VARIABLE for X10 gain.

3.7 Turn VARIABLE fully anti-clockwise.

3.8 Adjust R701 to centralize trace.

3.9 Repeat 3.6 through 3.8 until there is no movement when VARIABLE is turned through its range.

4.0 To set CH1 X1 gain: R617.

4.1 Switch CH1 on, CH2 off.

4.2 Set VOLTS/DIV to 10 mV.

4.3 Release VARIABLE for X1 gain.

4.4 Press INT TRIG 1.

4.5 Set TIME/DIV to 1 ms.

4.6 Set DC-GND-AC to DC.

4.7 Connect Calibrator to INPUT 1.

4.8 Set Calibrator to 50 mV peak to peak 1 kHz square-wave.

4.9 Adjust R617 to give 5 div amplitude.

5.0 To set CH1 X10 gain: R618.

5.1 Set Calibrator to 5 mV peak to peak.

5.2 Push VARIABLE for X10 gain.

5.3 Adjust R618 to give 5 div amplitude.

6.0 To set CH2 X1 gain: R691. PC115

NOTE: Operations 6.0 and 7.0 assume that CH gain, Ops 4.0 and 5.0 have been accurately set.

6.1 Switch CH1 off, CH2 on.

6.2 Set both VOLTS/DIV to 10 mV.

6.3 Turn VARIABLE fully clockwise.

6.4 Set DC-GND-AC to DC.

6.5 Release VARIABLE for X1 gain.

6.6 Press INT TRIG 2.

6.7 Set CHOP-SUM-ALT to ALT.

6.8 Adjust POSITION to centralize traces.

6.9 Connect Calibrator to INPUT 2.

6.10 Set Calibrator to 50 mV peak to peak 1 kHz squarewave.

6.11 Adjust R691 for 5 div amplitude.

6.12 Switch CH1 on.

6.13 Connect Calibrator to INPUT 1 & 2.

6.14 Check channels for identical traces.

7.0 To set CH2 X10 gain: R693. PC115

7.1 Set Calibrator to 5 mV peak to peak.

7.2 Push both VARIABLES for X10 gain.

7.3 Adjust R693 for 5 div amplitude.

7.4 Check channels for identical traces.

8.0 To set CH1 input and neutralizing capacities: C601 and C604. PC115

8.1 Connect Calibrator to INPUT 1.

8.2 Switch CH1 on, CH2 off.

8.3 Press INT TRIG 1.

8.4 Turn VARIABLE fully clockwise.

8.5 Set VOLTS/DIV to 10 mV.

8.6 Release VARIABLE for X1 gain.

8.7 Set DC-GND-AC to DC.

8.8 Set Calibrator to 50 mV, 1 kHz squarewave.

8.9 Adjust C604 for square corner with a non-capacitive trimming tool.

8.10 Turn VARIABLE fully anti-clockwise.

8.11 Adjust C601 for square corner (increase signal amplitude if required).

8.12 Turn VARIABLE fully clockwise.

8.13 Repeat 8.8 through 8.11 until a square corner is maintained at the extreme positions of the VARIABLE control.

9.0 To set CH2 input and neutralizing capacities: C634 and C636. PC115

9.1 Connect Calibrator to INPUT 2.

9.2 Switch CH2 on, CH1 off.

9.3 Press INT TRIG 2.

9.4 Turn VARIABLE fully clockwise.

9.5 Set VOLTS/DIV to 10 mV.

9.6 Release VARIABLE for X1 gain.

9.7 Set DC-GND-AC to DC.

9.8 Set Calibrator to 50 mV 1 kHz squarewave.

9.9 Adjust C636 for square corner with a non-capacitive trimming tool.

9.10 Turn the VARIABLE fully anti-clockwise.

9.11 Adjust C634 for square corner (increase signal amplitude if required).

9.12 Turn VARIABLE fully clockwise.

9.13 Repeat 9.8 through 9.11 until a square corner is maintained at the extreme positions of the VARIABLE control.

4.3.10 ATTENUATOR (adjustment)

1.0 To set CH1 Attenuator compensation. PC73

1.1 Switch CH1 on.

1.2 Connect Calibrator to INPUT 1.

1.3 Press INT TRIG 1.

1.4 DC-GND-AC, Set CH1 to DC, CH2 to GND.

1.5 Turn VARIABLE fully clockwise.

1.6 Set VOLTS/DIV to Col. 1 below.

1.7 Set Calibrator to Col. 2.

1.8 Adjust trimmer, Col. 3, for square corner.

1.9 Repeat 1.6 through 1.8 until trimmers in Col.3 have been adjusted.

VOLTS/DIV 1	Squarewave 1 kHz 2	Adjust 3
Volt	Volt	
20 m	0.1	C914
50 m	0.25	C911
0.1	0.5	C907
0.2	1	C912
0.5	2.5	C908
1	5	C904

1.10 Connect a compensated X10 probe between Calibrator and INPUT 1.

1.11 Repeat 1.6 through 1.8 with reference to table below.

VOLTS/DIV 1	Squarewave 1 kHz 2	Adjust 3
Volt	Volt	
0.1	5	C905 (0.2 V probe)
1	50	C902 (1.0 V probe)

1.12 Disconnect Calibrator and probe.

2.0 To set CH2 Attenuator compensation. PC73

2.1 Connect Calibrator to INPUT 2.

2.2 Check CH2 is on.

2.3 Press INT TRIG 2.

2.4 DC-GND-AC. Set CH1 to GND, CH2 to DC.

2.5 Carry out operation 1.5 through 1.12 above, using the respective CH2 controls.

4.3.11 HORIZONTAL AMPLIFIER (gain & timing)

1.0 To set sweep speed and trace length: C65, C67, C207, R106, R131, R132. PC110

1.1 Push FINE for X1 gain.

1.2 Set TIME/DIV for 1 ms.

1.3 Connect Marker Generator to INPUT 1.

1.4 Set Marker Generator to 1 ms.

1.5 Switch CH1 on.

1.6 Press INT TRIG 1.

1.7 Adjust R132 for correct timing, 1 pulse/div.

1.8 Adjust R106 for 10.2 div trace length.

1.9 Set TIME/DIV for 0.1 μs.

1.10 Adjust C67 for 10.2 div.

1.11 Set Marker Generator to 100 μs.

1.12 Set TIME/DIV to 1 ms.

1.13 Pull FINE out for X5 gain.

1.14 Adjust R131 for 2 markers/div.

1.15 Disconnect Marker Generator.

1.16 Connect Signal Generator to INPUT 1.

1.17 Push FINE X1 gain.

1.18 Set TIME/DIV to 0.1 μs.

1.19 Set Signal Generator to 10 MHz sinewave.

1.20 Adjust C65 for linearity of timing at the start of the trace.

1.21 Adjust C207 (T/D switch) for 1 cycle/div.

2.0 To set EXT X compensation: C2. PC110

2.1 Connect Calibrator to EXT X socket.

2.2 Set Calibrator to approximately 700 mV peak to peak, 100 kHz squarewave.

2.3 Set VARIABLE (speed) to EXT X.

2.4 Pull FINE for X5 gain.

2.5 Observe trace equals 3.5 divs approximately.

2.6 Adjust C2 to remove over and under shoot.

2.7 Disconnect Calibrator.

2.8 Push FINE for X1 gain.

2.9 Turn VARIABLE (speed) fully clockwise.

4.3.12 SWEEP (Single Shot adjustment)

1.0 Set Single shot: R112. PC110

1.1 Switch CH1 on, CH2 off.

1.2 Press INT TRIG 1.

1.3 Set DC-GND-AC to AC.

1.4 Connect Signal Generator to INPUT 1.

1.5 Set Signal Generator to 50 mV squarewave, 1-20 kHz to give 5 divisions display.

1.6 Set TIME/DIV to 1 ms.

1.7 Press AC (Trig Mode).

1.8 Adjust STABILITY and LEVEL for locked display.

1.9 Press SINGLE SHOT.

1.10 Turn R112 slightly anti-clockwise.

1.11 Press RESET.

1.12 Observe if single sweep occurs.

1.13 Repeat 1.9 through 1.12 until single sweep fails to occur and note slot position of R112.

1.14 Set TIME/DIV to 0.1 μs.

1.15 Turn R112 slightly clockwise.

1.16 Press RESET.

1.17 Observe Neon.

1.18 Repeat 1.15 through 1.17 until single sweep fails to occur and note slot position of R112.

NOTE: The sweep and neon light should be too fast to observe, however, failure to single sweep is indicated by the neon remaining on.

1.19 Set R112 midway between positions noted in 1.13 and 1.18.

1.20 Set DC-GND-AC to GND.

1.21 Press RESET, observe neon light.

1.22 Set DC-GND-AC to AC.

1.23 Observe neon extinguishes, indicating sweep has occurred.

1.24 Disconnect Signal Generator.

1.25 Press REP.

4.3.13 X–Y MODE (CH2 gain)

1.0 To set X–Y gain: R787. T/D switch

1.1 Connect Calibrator to INPUT 2.

1.2 Set Calibrator to 50 mV peak to peak at 1 kHz squarewave.

1.3 Set VOLTS/DIV to 10 mV.

1.4 Push VARIABLE (speed) for X – Y operation.

1.5 Adjust R787 for 5 div trace on X axis.

1.6 Release VARIABLE (speed).

4.3.14 VERTICAL AMPLIFIER (Pulse Response)

1.0 To set CH1 neutralization C605 and C608. PC115

1.1 Connect Calibrator to 50Ω Terminator

NOTE: Reference 4.3.1. Item 4.

1.2 Connect Terminator to INPUT 1.

1.3 Set Calibrator to 1 MHz squarewave.

1.4 Switch CH1 on, CH2 on.

1.5 Press INT TRIG 1.

1.6 DC-GND-AC. Set CH1 to DC, CH2 to GND.

1.7 Set VOLTS/DIV to 10 mV.

1.8 Set TIME/DIV to 0.2 μs.

1.9 Adjust CH1 squarewave amplitude for a 5 div trace.

1.10 Adjust C605 and C608 to minimize interaction of CH1 trace on CH2.

NOTE: The physical settings of C605 and C608 should be approximately equal; this is determined by the relative positions of the rotor and stator vanes.

2.0 To set CH2 neutralization; C625 and C631.

2.1 Connect Calibrator to 50Ω Terminator.

2.2 Connect Terminator to INPUT 2.

2.3 Set Calibrator to 1 MHz squarewave.

2.4 Press INT TRIG 2.

2.5 DC-GND-AC. Set CH1 to GND, CH2 to DC.

2.6 Set VOLTS/DIV to 10 mV.

2.7 Set TIME/DIV to 0.2 μs.

2.8 Adjust CH2 squarewave amplitude for a 5 div trace.

2.9 Adjust C625 and C631 to minimize interaction of CH2 trace on CH1.

NOTE: The physical settings of C625 and C631 should be approximately equal; this is determined by the relative positions of the rotor and stator vanes.

3.0 Set H.F. frequency response: C606, C619, C621, C632, R614, R681, R656.

CAUTION: The resultant settings of this procedure are extremely critical. Inaccuracies will have an adverse affect on bandwidth and pulse response.

3.1 Connect Calibrator to INPUT 1 via terminator. Reference 4.3.1. Item 4.

3.2 Set TIME/DIV to 5 μs.

3.3 Turn R614 fully clockwise.

3.4 Turn C606 until stator and rotating vanes are visible.

3.5 Set Calibrator to 100 kHz of 3 div amplitude approximately.

3.6 Press INT TRIG 1.

3.7 Set DC-GND-AC to DC.

3.8 Adjust STABILITY for a locked display.

3.9 Adjust C619 for corners without overshoot.

3.10 Set Calibrator to 1 MHz squarewave.

3.11 Set TIME/DIV to 0.2 μs.

3.12 Adjust R656 and C621 alternatively for optimum squarewave.

NOTE: Turn R656 clockwise until a point is reached immediately prior to the squarewave deterioration.

3.13 Set TIME/DIV to 5 μs.

3.14 Check for flatness of wave top.

3.15 Repeat 3.10 through 3.14 until a squarewave is displayed.

3.16 Set TIME/DIV to 0.2 μs.

3.17 Adjust C606 for maximum overshoot.

3.18 Turn R614 slightly anti-clockwise to eliminate the H.F. oscillation on the trailing edge of the first overshoot.

3.19 Adjust C606 to eliminate overshoot.

3.20 Connect Calibrator to INPUT 2.

3.21 Press INT TRIG 2.

3.22 Adjust STABILITY for a locked display.

3.23 Turn R681 fully clockwise.

3.24 Adjust C632 for maximum overshoot.

3.25 Turn R681 slightly anti-clockwise to eliminate H.F. oscillation on the trailing edge of the first overshoot.

3.26 Adjust C632 to eliminate overshoot.

3.27 Check CH1 and CH2 for similar pulse responses.

3.28 Check that the 3 dB bandwidths of both channels are better than 10 MHz at X1 and 8 MHz at X10 gain.

4.3.15 CALIBRATOR

1.0 To set internal 500 mV calibrator: R411.

1.1 Connect Calibrator to INPUT 1.

1.2 Set VOLTS/DIV to 100 mV.

1.3 Turn VARIABLE fully clockwise.

1.4 Press INT TRIG 1.

1.5 Set CH1 DC-GND-AC to DC.

1.6 Set Calibrator to an accurate 500 mV peak to peak squarewave.

NOTE: The precise amplitude of display should be 5 divisions if 4.3.6 Op.4.0 has been correctly carried out.

1.7 Connect CAL to INPUT 1.

1.8 Adjust R411 for exactly the same amplitude as found in Op.1.6.

4.3.16 STORAGE CIRCUITS

1.0 To set collimation; R1053, R1062 and R1063.

1.1 Release push buttons.

1.2 Press STORE.

1.3 Connect Avometer, 250 V D.C. range, between tag 27 PC111 and earth. (negative to earth).

1.4 Adjust R1026 to give reading of 150 V on Avometer, thus setting the storage target backplate (S.T.B.).

1.5 Turn STABILITY fully clockwise.

1.6 Set TIME/DIV to 1ms.

1.7 Turn BRILLIANCE fully clockwise.

1.8 Switch CH1 on, CH2 off.

1.9 Press REP.

1.10 Rotate CH1 POSITION slowly back and forth to completely cover screen with green background.

1.11 Press SINGLE SHOT.

1.12 Turn R1063 fully anti-clockwise and note the shadows in corners of display.

1.13 Turn R1063 slowly clockwise until shadow just disappears, then turn clockwise a further 10° (approx).

1.14 Press ERASE and release.

1.15 Repeat Ops. 1.9 through 1.11.

1.16 Turn R1062 fully anti-clockwise, then turn clockwise until display just brightens. (The effect is very slight).

1.17 Turn R1053 fully anti-clockwise.

1.18 Repeatedly press ERASE and release, and note shape of display edges.

1.19 Repeat Op. 1.18 while slowly turning R1053 clockwise until minimum pincushion distortion is observed at edges of display.

NOTE: Turning R1053 too far clockwise may cause the edges of the display to become too bright. The optimum condition is with minimum pincushion distortion consistent with uniformity of background illumination.

2.0 To set writing speed R1026.

2.1 Press REP.

2.2 Turn BRILLIANCE 3/4 clockwise approximately.

2.3 Adjust FOCUS and ASTIG for sharpest trace.

2.4 Press SINGLE SHOT.

2.5 Press ERASE and release.

2.6 Set TIME/DIV to 20 μs.

2.7 Turn VARIABLE (speed) fully clockwise.

2.8 Press RESET and observe display.

2.9 If trace is not a continuous line, turn VARIABLE (speed) anti-clockwise.

2.10 Press ERASE and release.

2.11 Repeat Ops. 2.8 through 2.10 until a continuous line may be stored with any break no greater than 1 mm.

2.12 Press and hold BEAM LOCATE.

2.13 Turn CH1 POSITION until spot is level with top graticule line.

2.14 Release BEAM LOCATE.

2.15 Press RESET.

2.16 Repeat 2.11 through 2.14 but at 2.13 use POSITION to move spot down by one division.

2.17 Repeat 2.11 through 2.16; check that a trace is stored along each graticule line. No line should have any break $>$ 1 mm.

CAUTION: Do not disturb TIME/DIV or VARIABLE (speed).

2.18 Connect Marker Generator to INPUT 1.

2.19 Set Marker Generator to 100 μs marker.

2.20 Set DC-GND-AC to DC.

2.21 Press REP.

2.22 Set VOLTS/DIV to 3 div approximately.

2.23 Press INT TRIG 1.

2.24 Press AC (Trig Mode).

2.25 Adjust STABILITY and TRIG LEVEL for locked display.

2.26 Measure distance 'D' in divisions between two consecutive markers.

NOTE: Writing speed is given by 'D' X10.

2.27 Check writing speed $\geqslant$ 25 div/ms; if less, turn R1026 clockwise to increase Avometer reading by approximately 2 V.

2.28 Repeat Ops. 2.8 through 2.27 until writing speed $\geqslant$ 25 divs/ms.

2.29 If however at 2.27 the writing speed is much greater than 25 divs/ms, it may be noted that the contrast ratio is poor, then:

1. Turn R1026 anticlockwise to decrease Avometer reading by approximately 2 V.
2. Set DC-GND-AC to GND.
3. Press ERASE and release.
4. Press SINGLE SHOT.
5. Turn STABILITY fully clockwise.
6. Repeat Ops. 2.8 to 2.27 until writing speed $\geqslant$25 div/ms and contrast ratio is optimum.

NOTE: Do NOT disturb VARIABLE (speed).

3.0 To set enhance R1014.

3.1 Set DC-GND-AC to GND.

3.2 Turn STABILITY fully clockwise.

3.3 Press SINGLE SHOT.

3.4 Press ENHANCE.

3.5 Turn R1014 fully anti-clockwise.

3.6 Set TIME/DIV to 2 μs.

3.7 Set ENHANCE VARIABLE to MAX.

3.8 Press ERASE and release.

3.9 Press RESET.

3.10 Turn R1014 clockwise 5°.

3.11 Press ERASE and release.

3.12 Press RESET.

3.13 Check trace is continuous; if any breaks $>$1 mm repeat Op. 3.10 through 3.13.

3.14 Press and hold BEAM LOCATE.

3.15 Turn CH1 POSITION, until spot is level with next divisional line.

3.16 Release BEAM LOCATE.

3.17 Press RESET.

3.18 Check condition in Op. 3.13 exists at each divisional line.

3.19 Disconnect Market Generator.

3.20 Release ENHANCE.

3.21 Press REP.

4.0 To check auto erase, R112

4.1 Connect Signal Generator to INPUT 1.

4.2 Set Signal Generator to approximately 5 Hz.

4.3 Set DC-GND-AC to DC.

4.4 Set VOLTS/DIV to 3 divs approximately.

4.5 Press DC (Trig mode).

4.6 Set TIME/DIV to 20 ms.

4.7 Turn VARIABLE (speed) fully clockwise.

4.8 Adjust STABILITY and LEVEL for locked display.

4.9 Adjust BRILLIANCE, FOCUS and ASTIG for reasonable display.

4.10 Press ERASE to AUTO.

4.11 Observe a continuous sequence of erase should follow by a sweep.

NOTE: The display should be locked to the input signal. Slight adjustment of the STABILITY may be necessary.

4.12 Observe display. If no display, turn R112 clockwise 5°.

4.13 Press RESET.

4.14 Turn STABILITY slightly back and forth.

4.15 Repeat Ops. 4.12 through 4.14 until a locked display is obtained with a continuous erase and sweep sequence.

4.16 Observe display continuous and if not locked, turn R112 anti-clockwise 5°.

4.17 Repeat Ops. 4.13 through 4.16 until a locked display is obtained with a continuous erase and sweep sequence.

CHAPTER 5
COMPONENT LIST

Values of resistors are stated in ohms or multiples of ohms; ratings at 70°C are in watts or sub-multiples of watts. Values of capacitors are stated in sub-multiples of farads; ratings at 70°C are in volts or kilovolts.

Whenever possible, exact replacements for components should be used, although locally available alternatives may be satisfactory for standard components.

Any order for replacement parts should include:

1. Instrument type
2. Instrument serial number
3. Component circuit reference
4. Component part number
5. Component value

CIRCUIT REFERENCE BLOCKS

The table below gives the blocks of circuit references, so that the reader can relate the items listed in this chapter and and their location in the circuitry and printed circuit boards in Chapter 6.

Circuit Reference		Circuit	Fig	P.C. Board No
From	To			
1	50	Trigger Circuit	5	110
60	200	Timebase X – Amp & Blanking	6	110
201	300	Time/Div Switch	7	116
301	400	CRT Circuit	8	
401	600	Power Supply	10	111
601	749	Y – Amplifier & Channel Switching	3	115
750	900	Y – Amplifier Trigger Output	4	115
901	999	Attenuator	2	73
1000		Storage Circuit	9	111

ABBREVIATIONS

C	Carbon
CP	Carbon preset
CV	Carbon variable
CER	Ceramic
CT	Ceramic trimmer
CM	Cermet thick film
E	Electrolytic
Ge	Germanium
MF	Metal film
MO	Metal oxide
PE	Polyester
PP	Polypropylene
PS	Polystyrene
Se	Selenium
Si	Silicon
SM	Silver mica
WW	Wire-wound
WWP	Wire-wound preset
WWV	Wire-wound variable

TEKTRONIX U.K. LIMITED

36 - 38 Coldharbour Lane, Harpenden, Hertfordshire, England.

Telephone: Harpenden 63141 Telex: 25559

All requests for repairs or replacement parts should be directed to the Tektronix Field Office or representative in your area. This procedure will assure you the fastest possible service. In the UK requests to be made to Harpenden.

ELECTRICAL

	CIR REF	PART NUMBER	DESCRIPTION VALUE F	TYPE	TOL %	RATING V
	C2	281-0156-00	1.4-6.4 p	PP		500
5)	C3	285-1078-00	1.5 μ	PE	20	63
5)	C4	285-1078-00	1.5 μ	PE	20	63
	C6	281-0734-00	100 n	CER		30
8)	C6A	281-0734-00	100 n	CER		30
	C7	281-0678-00	3 p	CER	0.1 p	500
	C8	281-0678-00	3 p	CER	0.1 p	500
	C11	290-0399-00	8 μ	E		25
	C12	290-0546-00	15 μ	E		16
2)	C13	285-0982-00	82 p	PS	1 p	350
	C14	285-0850-00	1 n	PS	5	125
	C15	285-0854-00	100 p	PS	2	350
34)	C16	290-0475-00	100 μ	E		25
	C60	285-0854-00	100 p	PS	2 p	350
	C61	281-0678-00	3 p	CER	0.1 p	500
	C62	285-0854-00	100 p	PS	2 p	350
	C63	285-0867-00	20 p	PS	1 p	350
	C64	281-0710-00	10 n	CER		250
6)	C65	281-0155-00	2-22 p	PP		500
	C66	285-0842-00	15 p	PS	1 p	350
	C67	281-0154-00	2-12 p	PP		500
	C68	285-0776-00	27 p	PS	1 p	350
	C69	285-0915-00	100 n	PE	20	100
	C70	285-0773-00	100 n	PE	20	400
	C71	285-0869-00	47 p	PS	2 p	350
7)	C72	290-0635-00	4.7 μ	E		63
5)	C73	290-0625-00	4.7 μ	E	50	160
	C74	285-0869-00	47 p	PS	2 p	350
1)	C75	285-0994-00	470 n	PE	20	100
	C76	281-0734-00	100 n	CER		30
	C77	281-0734-00	100 n	CER		30
	C78	281-0734-00	100 n	CER		30
	C79	281-0710-00	10 n	CER		250
	C80	281-0710-00	10 n	CER		250
48)	C81	290-0623-00	4.7 μ	E		25
07)	C82	290-0635-00	4.7 μ	E		63
35)	C90	283-0087-00	300 p	CER	5	100
76)	C91	285-0994-00	.47μF	PE	20	100
9)	C201	285-0869-00	47 p	PS	2 p	350
	C202	285-0844-00	39 p	PS	2 p	350
	C203	285-0769-00	10 n	PE	20	400

CIR REF	PART NUMBER	DESCRIPTION VALUE F	TYPE	TOL %	RATING V	
C204	285-0990-00	1 μ	PE	20	160	
C205	285-0941-00	80 p	PS	1 p	350	
C206	285-0942-00	10 n	PE	1	125	
C207	281-0732-00	3-12 p	CT		350	
C208	285-0943-00	1 μ	PE	1	63	
C209	285-0866-00	10 p	PS	1 p	350	
C301	285-0773-00	100 n	PE	20	400	
C302	285-0799-00	33 n	PE	20	250	
C303	285-0837-00	20 n	PE		5 k	
C304	283-0264-00	1 n	CER		10 k	(2966)
C305	281-0681-00	10 n	CER		4 k	
C306	281-0681-00	10 n	CER		4 k	
C307	283-0264-00	1 n	CER		10 k	(2966)
C308	281-0677-00	10 n	CER		2 k	(817)
C309	281-0734-00	100 n	CER		30	(906)
C401	290-0498-00	1 m	E		25	
C402	290-0377-00	1 m	E		16	
C403	285-0773-00	100 n	PE	20	400	
C404	290-0592-00	100 μ	E		300	
C405	290-0540-00	15 μ	E		450	
C406	290-0489-00	15 μ	E		350	
C407	290-0551-00	33 μ	E		250	
C408	290-0593-00	680 μ	E		25	
C409	290-0624-00	2.2 m	E		40	(749)
C411	290-0553-00	100 μ	E		160	
C412	290-0553-00	100 μ	E		160	
C413	285-0874-00	470 p	PS	5	125	
C414	290-0554-00	470 μ	E		16	
C415	290-0377-00	1 m	E		16	
C416	290-0553-00	100 μ	E		160	
C417	290-0554-00	470 μ	E		16	
C418	290-0553-00	100 μ	E		160	
C419	290-0377-00	1 m	E		16	
C421	290-0377-00	1 m	E		16	
C422	290-0377-00	1 m	E		16	
C423	281-0734-00	100 n	CER		30	

	CIR REF	PART NUMBER	DESCRIPTION VALUE F	TYPE	TOL %	RATING V
	C600	285-0796-00	100 n	PE	20	250
	C601	281-0157-00	5.5-65.5 p	PP		500
	C602	285-0845-00	68 p	PS	2 p	350
	C603	281-0723-00	1.8 p	CER	0.1 p	500
	C604	281-0156-00	1.4-6.4 p	PP		500
	C605	281-0156-00	1.4-6.4 p	PP		500
	C606	281-0157-00	5.5-65.5 p	PP		500
	C607	281-0734-00	100 n	CER		30
	C608	281-0156-00	1.4-6.4 p	PP		500
	C609	281-0723-00	1.8 p	CER	0.1 p	500
(1207)	C610	290-0635-00	4.7 μ	E		63
	C611	285-0790-00	10 n	PE	20	125
(1122)	C612	285-0788-00	100 n	PE	10	125
	C613	285-0854-00	100 p	PS	2 p	350
	C614	285-0867-00	20 p	PS	1 p	350
	C615	285-0867-00	20 p	PS	1 p	350
	C616	281-0710-00	10 n	CER	2 p	250
	C618	285-0869-00	47 p	PS	2 p	350
	C619	281-0155-00	2-22 p	PP		500
	C620	281-0734-00	100 n	CER		30
	C621	281-0155-00	2-22 p	PP		500
	C622	285-0854-00	100 p	PS	2 p	350
	C623	281-0710-00	10 n	CER		250
	C624	290-0494-00	47 μ	E		25
	C625	281-0156-00	1.4-6.4 p	PP		500
	C626	281-0734-00	100 n	CER		30
	C627	281-0723-00	1.8 p	CER	0.1 p	500
	C628	285-0790-00	10 n	PE	20	125
(1122)	C629	285-0788-00	100 n	PE	10	125
	C631	281-0156-00	1.4-6.4 p	PP		500
	C632	281-0157-00	5.5-65.5 p	PP		500
	C633	281-0723-00	1.8 p	CER	0.1 p	500
	C634	281-0156-00	1.4-6.4 p	PP		500
	C635	285-0845-00	68 p	PS	2 p	350
	C636	281-0157-00	5.5-65.5 p	PP		500
	C637	281-0710-00	10 n	CER		250
	C638	290-0493-00	22 μ	E		16
	C639	281-0710-00	10 n	CER		250
(3180)	C641	290-0401-00	2.2μF	E	20	30
	C642	281-0734-00	100 n	CER		30
	C751	281-0710-00	10 n	CER		250
	C752	281-0710-00	10 n	CER		250
	C753	281-0710-00	10 n	CER		250

CIR REF	PART NUMBER	DESCRIPTION VALUE F	TYPE	TOL %	RATING V	
C754	281-0710-00	10 n	CER		250	
C755	281-0713-00	10 p	CER	0.25 p	750	
C756	281-0713-00	10 p	CER	0.25 p	750	
C757	285-0872-00	180 p	PS	2	350	(1213
*C901	285-0772-00	100 n	PE	10	400	
*C902	281-0145-00	6-25 p	CT		500	
*C903	285-0810-00	820 p	PS	5	125	
*C904	281-0136-00	3-10 p	CT		500	
*C905	281-0145-00	6-25 p	CT		500	
*C906	285-0869-00	47 p	PS	2 p	350	
*C907	281-0136-00	3-10 p	CT		500	
*C908	281-0145-00	6 25 p	CT		500	
*C909	285-0842-00	15 p	PS	1 p	350	
*C911	281-0136-00	3-10 p	CT		500	
*C912	281-0136-00	3-10 p	CT		500	
*C913	283-0653-00	5 p	SM	0.5 p	350	
*C914	281-0145-00	6 25 p	CT		500	
C1000	285-0776-00	27 p	PS	1 p	350	
C1001	285-0874-00	470 p	PS	5	125	
C1002	281-0710-00	10 n	CER		250	
C1003	285-0972-00	150 n	PE	5	250	
C1004	285-0850-00	1 n	PS	5	125	
C1005	285-0850-00	1 n	PS	5	125	
C1006	285-0854-00	100 p	PS	2 p	350	
C1007	285-0839-00	200 n	PE	2	160	
C1008	290-0493-00	22 μ	E		16	
C1009	290-0623-00	4.7 μ	E		25	(1648
C1013	290-0551-00	33 μ	E		250	
C1014	285-0874-00	470 p	PS	5	125	
C1015	285-0802-00	2 μ	PE	2	160	
C1016	285-0854-00	100 p	PS	2 p	350	
C1017	285-1003-00	470 n	PE	20	400	
C1018	281-0710-00	10 n	CER		250	
C1019	285-0854-00	100 p	PS	2 p	350	

* Two per instrument

CIR REF	PART NUMBER	VALUE V	DESCRIPTION	TYPE	TOL %	RATING	
D1	152-0062-01		1N914/1N4148	Si		75 V	
D2	152-0062-01		1N914/1N4148	Si		75 V	
D3	152-0370-00		AAY30/AAY42	Ge		50 V	(755)
D64	152-0062-01		1N914/1N4148	Si		75 V	
D65	152-0062-01		1N914/1N4148	Si		75 V	
D66	152-0062-01		1N914/1N4148	Si		75 V	
D67	152-0483-00		25 pA leakage current at – 6 V and 25°C				
D68	152-0062-01		1N914/1N4148	Si		75 V	
D69	152-0494-00	75	Zener	Si	5	700 mW	
D70	152-0344-00	100	Zener	Si		700 mW	
D71	152-0062-01		1N914/1N4148	Si		75 V	
D72	152-0062-01		1N914/1N4148	Si		75 V	
D73	152-0062-01		1N914/1N4148	Si		75 V	
D74	152-0062-01		1N914/1N4148	Si		75 V	
D75	152-0062-01		1N914/1N4148	Si		75 V	
D76	152-0062-01		1N914/1N4148	Si		75 V	
D77	152-0062-01		1N914/1N4148	Si		75 V	
D78	152-0062-01		1N914/1N4148	Si		75 V	
D79	152-0062-01		1N914/1N4148	Si		75 V	
D80	152-0344-00	100	Zener	Si		700 mW	
D81	152-0062-01		1N914/1N4148	Si		75 V	
D82	152-0062-01		1N914/1N4148	Si		75 V	
D83	152-0062-01		1N914/1N4148	Si		75 V	
D84	152-0468-00	150	BAX16	Si		200 mA	(723)
D85	152-0062-01		1N914/1N4148	Si		75 V	
D301	152-0391-00	50	Rectifier	Si			
D302	152-0408-00	10 k	Rectifier	Si		5 mA	
D303	152-0468-00	150	Rectifier	Si			(840)
D304	152-0510-00	150	Zener	Si	5	700 mW	
D305	152-0510-00	150	Zener	Si	5	700 mW	
D306	152-0352-00	800	Rectifier	Si			(817)
D307	152-0346-00	11	Zener	Si	5	330 mW	(755)
D308	152-0352-00	800	Rectifier	Si			(817)
D309	152-0062-01		1N914/1N4148	Si		75 V	(725)
D401	152-0339-00	50	Rectifier	Si		500 mA	
D402	152-0339-00	50	Rectifier	Si		500 mA	
D403	152-0339-00	50	Rectifier	Si		500 mA	
D404	152-0339-00	50	Rectifier	Si		500 mA	
D405	152-0339-00	50	Rectifier	Si		500 mA	
D406	152-0352-00	800	Rectifier	Si		200 mA	
D407	152-0352-00	800	Rectifier	Si		200 mA	
D408	152-0352-00	800	Rectifier	Si		200 mA	
D409	152-0341-00	450	Rectifier	Si		500 mA	
D411	152-0341-00	450	Rectifier	Si		500 mA	
D412	152-0341-00	450	Rectifier	Si		500 mA	
D413	152-0341-00	450	Rectifier	Si		500 mA	
D414	152-0062-01		1N914/1N4148	Si		75 V	
D415	152-0062-01		1N914/1N4148	Si		75 V	

CIR REF	PART NUMBER	VALUE V	DESCRIPTION	TYPE	TOL %	RATING
D416	152-0062-01		1N914/1N4148	Si		75 V
D417	152-0352-00	800	Rectifier	Si		200 mA
D418	152-0339-00	50	Rectifier	Si		500 mA
D419	152-0352-00	800	Rectifier	Si		200 mA
D421	152-0352-00	800	Rectifier	Si		200 mA
D422	152-0352-00	800	Rectifier	Si		200 mA
D423	152-0352-00	800	Rectifier	Si		200 mA
D601	152-0062-01		1N914/1N4148	Si		75 V
D603	152-0062-01		1N914/1N4148	Si		75 V
D604	152-0348-00	6.2	Zener	Si	5	330 mW
D605	152-0062-01		1N914/1N4148	Si		75 V
D606	152-0062-01		1N914/1N4148	Si		75 V
D607	152-0062-01		1N914/1N4148	Si		75 V
D608	152-0062-01		1N914/1N4148	Si		75 V
D609	152-0062-01		1N914/1N4148	Si		75 V
D610	152-0062-01		1N914/1N4148	Si		75 V
D611	152-0348-00	6.2	Zener	Si	5	330 mW
D612	152-0062-01		1N914/1N4148	Si		75 V
D751	152-0344-00	100	Zener	Si		700 mW
D752	152-0344-00	100	Zener	Si		700 mW
D1001	152-0062-01		1N914/1N4148	Si		75 V
D1002	152-0062-01		1N914/1N4148	Si		75 V
D1003	152-0062-01		1N914/1N4148	Si		75 V
D1004	152-0062-01		1N914/1N4148	Si		75 V
D1005	152-0062-01		1N914/1N4148	Si		75 V
D1006	152-0062-01		1N914/1N4148	Si		75 V
D1007	152-0062-01		1N914/1N4148	Si		75 V
D1008	152-0062-01		1N914/1N4148	Si		75 V
D1009	152-0341-00	450	Rectifier	Si		500 mA
D1011	152-0341-00	450	Rectifier	Si		500 mA
D1012	152-0062-01		1N914/1N4148	Si		75 V
D1013	152-0062-01		1N914/1N4148	Si		75 V
D1014	152-0510-00	150	Zener	Si	5	700 mW
D1015	152-0341-00	450	Rectifier	Si		500 mA
D1016	152-0062-01		1N914/1N4148	Si		75 V
D1017	152-0062-01		1N914/1N4148	Si		75 V
D1018	152-0341-00	450	Rectifier	Si		500 mA
D1019	152-0062-01		1N914/1N4148	Si		75 V
D1021	152-0062-01		1N914/1N4148	Si		75 V
D1022	152-0062-01		1N914/1N4148	Si		75 V
D1023	152-0062-01		1N914/1N4148	Si		75 V
D1024	152-0062-01		1N914/1N4148	Si		75 V
D1025	152-0341-00	450	Rectifier	Si		500 mA
D1026	152-0511-00	51	Zener	Si	5	700 mW

CIR REF	PART NUMBER	VALUE V	DESCRIPTION	TYPE	TOL %	RATING
D416	152-0062-01		1N914/1N4148	Si		75 V
D417	152-0352-00	800	Rectifier	Si		200 mA
D418	152-0339-00	50	Rectifier	Si		500 mA
D419	152-0352-00	800	Rectifier	Si		200 mA
D421	152-0352-00	800	Rectifier	Si		200 mA
D422	152-0352-00	800	Rectifier	Si		200 mA
D423	152-0352-00	800	Rectifier	Si		200 mA
D601	152-0062-01		1N914/1N4148	Si		75 V
D603	152-0062-01		1N914/1N4148	Si		75 V
D604	152-0348-00	6.2	Zener	Si	5	330 mW
D605	152-0062-01		1N914/1N4148	Si		75 V
D606	152-0062-01		1N914/1N4148	Si		75 V
D607	152-0062-01		1N914/1N4148	Si		75 V
D608	152-0062-01		1N914/1N4148	Si		75 V
D609	152-0062-01		1N914/1N4148	Si		75 V
D610	152-0062-01		1N914/1N4148	Si		75 V
D611	152-0348-00	6.2	Zener	Si	5	330 mW
D612	152-0062-01		1N914/1N4148	Si		75 V
D751	152-0344-00	100	Zener	Si		700 mW
D752	152-0344-00	100	Zener	Si		700 mW
D1001	152-0062-01		1N914/1N4148	Si		75 V
D1002	152-0062-01		1N914/1N4148	Si		75 V
D1003	152-0062-01		1N914/1N4148	Si		75 V
D1004	152-0062-01		1N914/1N4148	Si		75 V
D1005	152-0062-01		1N914/1N4148	Si		75 V
D1006	152-0062-01		1N914/1N4148	Si		75 V
D1007	152-0062-01		1N914/1N4148	Si		75 V
D1008	152-0062-01		1N914/1N4148	Si		75 V
D1009	152-0341-00	450	Rectifier	Si		500 mA
D1011	152-0341-00	450	Rectifier	Si		500 mA
D1012	152-0062-01		1N914/1N4148	Si		75 V
D1013	152-0062-01		1N914/1N4148	Si		75 V
D1014	152-0510-00	150	Zener	Si	5	700 mW
D1015	152-0341-00	450	Rectifier	Si		500 mA
D1016	152-0062-01		1N914/1N4148	Si		75 V
D1017	152-0062-01		1N914/1N4148	Si		75 V
D1018	152-0341-00	450	Rectifier	Si		500 mA
D1019	152-0062-01		1N914/1N4148	Si		75 V
D1021	152-0062-01		1N914/1N4148	Si		75 V
D1022	152-0062-01		1N914/1N4148	Si		75 V
D1023	152-0062-01		1N914/1N4148	Si		75 V
D1024	152-0062-01		1N914/1N4148	Si		75 V
D1025	152-0341-00	450	Rectifier	Si		500 mA
D1026	152-0511-00	51	Zener	Si	5	700 mW

CIR REF	PART NUMBER	VALUE	DESCRIPTION	RATING	
FS401	159-0018-00 159 0003-00	800 mA (200 – 250 V) 116 A (100 – 125 V)	1.25 in.delay 1.25 in.delay		
FB	276-0597-00		Core Ferrite Bead FX1115		
L61	108-0482-00	160 μH	Fixed inductor		
L751	108-0670-01	1 kΩ	Trace rotation coil 3100 turns		(815)
LP301	150-0095-00	14 V	Les	750 mW	(725)
LP401	150-0095-00	14 V	Les	750 mW	
L601 L602 L603	108-0482-00 108-0482-00 108-0665-00	160 μH 160 μH	Fixed inductor Fixed inductor Inductor, 60 turns on 220 Ω		

	CIR REF	PART NUMBER	DESCRIPTION VALUE ohms	TYPE	TOL %	RATING W
	R1	317-0104-01	100 k	C	5	125 m
	R2	317-0224-01	220 k	C	5	125 m
	R3	317-0104-01	100 k	C	5	125 m
	R4	316-0273-01	27 k	C	10	250 m
	R5	317-0271-01	270	C	5	125 m
	R6	317-0152-01	1.5 k	C	5	125 m
	R7	317-0273-01	27 k	C	5	125 m
	R8	317-0222-01	2.2 k	C	5	125 m
	R9	317-0182-01	1.8 k	C	5	125 m
	R10	316-0225-01	2.2 M	C	10	250 m
(1099)	R11	317-0911-01	910	C	5	125 m
	R12	317-0332-01	3.3 k	C	5	125 m
	R13	317-0821-01	820	C	5	125 m
	R14	317-0222-01	2.2 k	C	5	125 m
	*R15	311-1208-00	2.2 k	CV	20	250 m
	R16	317-0821-01	820	C	5	125 m
	R17	311-0719-00	470	CP	20	250 m
	R18	317-0222-01	2.2 k	C	5	125 m
	R19	317-0821-01	820	C	5	125 m
(1099)	R20	317-0221-01	220	C	5	125 m
	R21	317-0332-01	3.3 k	C	5	125 m
	R22	317-0222-01	2.2 k	C	5	125 m
	R23	317-0182-01	1.8 k	C	5	125 m
	R24	317-0102-01	1 k	C	5	125 m
	R25	317-0272-01	2.7 k	C	5	125 m
	R26	317-0273-01	27 k	C	5	125 m
	R27	317-0153-01	15 k	C	5	125 m
	R28	317-0393-01	39 k	C	5	125 m
	R29	317-0221-01	220	C	5	125 m
(2787)	R30	315-0331-00	330	C	5	125 m
	R31	317-0223-01	22 k	C	5	125 m
	R32	317-0392-01	3.9 k	C	5	125 m
	R33	317-0222-01	2.2 k	C	5	125 m
	R34	311-0717-00	220	CP	20	125 m
	R35	317-0471-01	470	C	5	125 m
	R36	317-0682-01	6.8 k	C	5	125 m
	R37	317-0103-01	10 k	C	5	125 m
	R38	317-0222-01	2.2 k	C	5	125 m
	R39	317-0224-01	220 k	C	5	125 m
	R41	317-0182-01	1.8 k	C	5	125 m
	R42	317-0182-01	1.8 k	C	5	125 m
	R60	317-0332-01	3.3 k	C	5	125 m
	R61	317-0124-01	120 k	C	5	125 m
	R62	317-0681-01	680	C	5	125 m
	R63	317-0124-01	120 k	C	5	125 m
	R64	317-0104-01	100 k	C	5	125 m

	CIR REF	PART NUMBER	DESCRIPTION VALUE ohms	TYPE	TOL %	RATING W	
	R65	317-0104-01	100 k	C	5	125 m	
	R66	317-0564-01	560 k	C	5	125 m	(732
	R67	307-0147-00	8.2 k	MO	5	1.5	
	R68	321-0199-48	1.15 k	MF	1	125 m	
	R69	317-0123-01	12 k	C	5	125 m	
	R70	317-0123-01	12 k	C	5	125 m	
	†R71	307-0144-00	10 k	MO	5	1.5	(1121
	*R72	311-1208-00	22 k	CV	20	250 m	
	R73	317-0271-01	270	C	5	125 m	
	R74	317-0472-01	4.7 k	C	5	125 m	
	R75	317-0103-01	10 k	C	5	125 m	
	R76	307-0232-00	12 k	MO	5	1.5	
	R77	317-0103-01	10 k	C	5	125 m	
	R78	307-0144-00	10 k	MO	5	1.5	
	R79	317-0473-01	47 k	C	5	125 m	
	R80	317-0681-01	680	C	5	125 m	
	R81	317-0331-01	330	C	5	125 m	
	R82	317-0680-01	68	C	5	125 m	
	R83	317-0361-01	360	C	5	125 m	
	R84	317-0563-01	56 k	C	5	125 m	
	R85	317-0392-01	3.9 k	C	5	125 m	
	R86	317-0103-01	10 k	C	5	125 m	
	R87	317-0101-01	100	C	5	125 m	
	R88	317-0273-01	27 k	C	5	125 m	
	R89	316-0103-01	10 k	C	10	250 m	
	R90	317-0222-01	2.2 k	C	5	125 m	(739
	R91	317-0154-01	150 k	C	5	125 m	
	R92	317-0104 01	100 k	C	5	125 m	
	R93	311-0802-00	4.7 k	CP	20	250 m	
	R94	317-0272-01	2.7 k	C	5	125 m	
	R95	317-0392-01	3.9 k	C	5	125 m	
	R96	316-0106-01	10 M	C	10	250 m	
	R97	316 0225-01	2.2 M	C	10	250 m	
	R98	315-0153-00	15 k	C	5	125 m	
	R99	317-0333 01	33 k	C	5	125 m	
	R100	316-0154-01	150 k	C	10	250 m	
	R101	317-0223 01	22 k	C	5	125 m	
	R102	317-0105-01	1 M	C	5	125 m	
	R103	321-0289-48	10 k	MF	1	125 m	
	R104	317-0563-01	56 k	C	5	125 m	
	R105	317-0393-01	39 k	C	5	125 m	
	R106	311-0750-00	22 k	CP	20	250 m	
	R107	317-0223-01	22 k	C	5	125 m	
	R108	317-0183-01	18 k	C	5	125 m	
	R109	317-0472-01	4.7 k	C	5	125 m	
	R110	317-0392-01	3.9 k	C	5	125 m	
	R111	315-0222 00	3 k	C	5	125 m	(2557
	R112	311-0750-00	22 k	CP	20	250 m	
	R113	317-0332-01	3.3 k	C	5	125 m	
	R114	317-0103 01	10 k	C	5	125 m	
	R115	317-0472-01	4.7 k	C	5	125 m	
	R116	317-0512-01	5.1 k	C	5	125 m	
	R117	315-0334-00	330 k	C	5	125 m	(3065)
	**R118 R119	311-1211-00	100 k	CV	20	250m	
	R120	316-0154-01	150 k	C	10	250 m	
	R121	317-0682-01	6.8 k	C	5	125 m	

* Dual Pot ** Dual Pot with S67

† 2 off in parallel

	CIR REF	PART NUMBER	VALUE ohms	DESCRIPTION TYPE	TOL %	RATING W
	R122	321-0289-48	10 k	MF	1	125 m
	R123	316-0273-01	27 k	C	10	250 m
310)	R124	317-0102-01	1 k	C	5	125 m
732)	R125	308-0734-00	4.7 k	WW	5	6
	R126	317-0273-01	27 k	C	5	125 m
	R127	316-0683-01	68 k	C	10	250 m
	R128	317-0101-01	100	C	5	125 m
	R129	317-0124-01	120 k	C	5	125 m
723)	R130	317-0471-01	470	C	5	125 m
	R131	311-0712-00	100	CP	20	250 m
	R132	311-0851-00	1 k	CP	20	250 m
	R133	317-0101-01	100	C	5	125 m
723)	R134	317-0471-01	470	C	5	125 m
732)	R135	308-0734-00	4.7 k	WW	5	6
	R136	321-0114-48	150	MF	1	125 m
39)	R137	323-0797-48	68 k	MF	1	500 m
	R138	321-0844-48	2.2 k	MF	1	125 m
	R139	317-0331-01	330	C	5	125 m
	R140	317-0331-01	330	C	5	125 m
55)	R141	303-0223-01	22 k	C	5	1
	R142	315-0123-02	12 k	C	5	250 m
	R143	321-0210-48	1.5 k	MF	1	125 m
23)	R144	317-0471-01	470	C	5	125 m
	R145	321-0877-48	62 k	MF	1	125 m
	R146	317-0272-01	2.7 k	C	5	125 m
	R147	317-0272-01	2.7 k	C	5	125 m
	R148	316-0122-01	1.2 k	C	10	250 m
23)	R149	317-0470-01	47	C	5	125 m
25)	R151	317-0272-01	2.7 k	C	5	125 m
39)	R152	317-0224-01	220 k	C	5	125 m
	R202	317-0242-01	2.4 k	C	5	125 m
	R203	317-0302-01	3 k	C	5	125 m
	R204	317-0392-01	3.9 k	C	5	125 m
	R205	317-0153-01	15 k	C	5	125 m
	R206	321-0351-48	44.2 k	MF	1	125 m
	R207	316-0394-01	390 k	C	10	250 m
	*R208	311-1211-00	100 k	CV	20	1
	R209	324-0585-40	12.1 M	MF	1	1
	R211	324-0556-40	6.04 M	MF	1	1
	R212	324-0614-40	3.6 M	MF	1	1
0)	R213	322-1488-40	1.21 M	MF	1	250 m
	R214	321-0460-48	604 k	MF	1	125 m
	R215	321-0935-48	360 k	MF	1	125 m
3)	R216	321-0393-48	121 k	MF	1	125 m
	R217	321-0364-48	60.4 k	MF	1	125 m
	R218	321-0364-48	60.4 k	MF	1	125 m

CIR REF	PART NUMBER	VALUE ohms	DESCRIPTION TYPE	TOL %	RATING W	
R301	316-0333-01	33 k	C	10	250 m	
R302	315-0471-00	470	C	5	125 m	
R303	317-0333-01	33 k	C	5	125 m	
R304	315-0153-00	15 k	C	5	125 m	(2686)
R305	317-0394-01	390 k	C	5	125 m	(957)
R306	317-0103-01	10 k	C	5	125 m	
R307	317-0334-01	330 k	C	5	125 m	
R308	311-0765-00	100 k	CP	20	250 m	
R309	307-0491-00	3.3 M	C	20	250 m	
R310	307-0491-00	3.3 M	C	20	250 m	(1425)
R311	307-0491-00	3.3 M	C	20	250 m	
R312	316-0185-01	1.8 M	C	10	250 m	
R313	307-0491-00	3.3 M	C	20	250 m	(1425)
R314	316-0275-01	2.7 M	C	10	250 m	
R315	303-0273-01	27 k	C	5	1	(725)
R316	315-0125-01	1.2 M	C	5	250 m	
R317	317-0101-01	100	C	5	125 m	(755)
†R318	311-1326-00	250	CV	20	2	
R319		250	CV	20	2	
R320	301-0103-01	10 k	C	5	500 m	(1157)
R321	316-0106-03	10 M	C	10	250 m	(766)
R322	316-0226-01	22 M	C	10	250 m	
**R323	311-1867-00	250 k	CV	20	2	
R324	317-0391-01	390	C	5	125 m	(755)
R325	317-0101-01	100	C	5	125 m	(725)
R326	317-0124-01	120 k	C	5	125 m	
R328	311-0756-00	47 k	CP	20	250 m	(755)
R329	316-0223-01	22 k	C	10	250 m	(725)
R331	317-0103-01	10 k	C	5	125 m	(766)
R332	301-0122-01	1.2 k	C	5	500 m	(1157)
R333	301-0152-01	1.5 k	C	5	500 m	(1157)
R334	301-0103-01	10 k	C	5	500 m	
R400	315-0470-00	47	C	5	125m	(3129)
R402	308-0466-00	9.1	WW	10	1	
R404	317-0472-01	4.7 k	C	5	125 m	
R405	307-0355-00	220	MO	5	3.5	
R406	307-0140-00	1.8 k	MO	5	1.5	
R407	321-0844-48	2.2 k	MF	1	125 m	
R408	317-0183-01	18 k	C	5	125 m	
R409	315-0470-01	47	C	5	250 m	
R411	311-0735-00	10 k	CP	20	250 m	
R412	307-0254-00	390	MO	5	3.5	
R413	315-0330-01	33	C	5	250 m	

* Fitted to S61 ** Dual pot and R323 fitted to S401. † Dual Pot

	CIR REF	PART NUMBER	DESCRIPTION VALUE ohms	TYPE	TOL %	RATING W
(891)	R414	301-0330-01	33	C	5	500 m
(775)	R415	307-0321-00	470	MO	5	3.25
	R417	315-0220-01	22	C	10	250 m
	R418	315-0181-01	180	C	5	250 m
	R422	315-0271-02	270	C	5	250 m
	R601	317-0105-01	1M	C	5	125 m
	R602 A	310-0679-00	111 k	CM	1	250 m
	B		900 k			
	R603	317-0154-01	150 k	C	5	125 m
	R604	317-0271-01	270	C	5	125 m
	R605	317-0221-01	220	C	5	125 m
	R606	317-0751-01	750	C	5	125 m
	R607	317-0272-01	2.7 k	C	5	125 m
	R608	317-0681-01	680	C	5	125 m
(1109)	R609	317-0471-01	470	C	5	125 m
	R610	317-0221-01	220	C	5	125 m
	R611	317-0561-01	560	C	5	125 m
	R612	317-0103-01	10 k	C	5	125 m
	R613	317-0911-01	910	C	5	125 m
	R614	311-0717-00	220	CP	20	250 m
	R615	317-0272-01	2.7 k	C	5	125 m
	R616	317-0681-01	680	C	5	125 m
	R617	311-0995-00	680	CP	20	250 m
	R618	311-0712-00	100	CP	20	250 m
	R619	317-0561-01	560	C	5	125 m
	R620	317-0331-01	330	C	5	125 m
	R621	317-0103-01	10 k	C	5	125 m
	R622	311-0717-00	220	CP	20	250 m
	R623	317-0911-01	910	C	5	125 m
(739)	R624	311-1212-00	500	CV	+40 −0	125 m
	R625	311-0712-00	100	C	20	250 m
	R626	317-0271-01	270	C	5	125 m
	R627	317-0221-01	220	C	5	125 m
	R628	317-0271-01	270	C	5	125 m
	R629	317-0751-01	750	C	5	125 m
	R630	317-0681-01	680	C	5	125 m
	R631	317-0820-01	82	C	5	125 m
	R632	317-0391-01	390	C	5	125 m
(723)	R633	315-0821-01	820	C	5	250 m
	R634	317-0473-01	47 k	C	5	125 m
	R635	317-0684-01	680 k	C	5	125 m
(1159)	R636	315-0155-02	1.5 M	C	5	250 m
	R637	303-0183-01	18 k	C	5	1

	CIR REF	PART NUMBER	DESCRIPTION VALUE ohms	TYPE	TOL %	RATING W	
	R638	303-0183-01	18 k	C	5	1	
	R639	317-0104-01	100 k	C	5	125 m	
	R640	317-0392-01	3.9 k	C	5	125 m	
	R641	317-0561-01	560	C	5	125 m	
	R642	311-0717-00	220	CP	20	250 m	
	R643	315-0181-01	180	C	5	250 m	(816
	R644	317-0561-01	560	C	5	125 m	
	R645	317-0242-01	2.4 k	C	5	125 m	
	R646	317-0102-01	1 k	C	5	125 m	
	R647	317-0223-01	22 k	C	5	125 m	
	R648	317-0102-01	10 k	C	5	125 m	
	R649	317-0104-01	100 k	C	5	125 m	
	R650	317-0561-01	560	C	5	125 m	
	R651	317-0122-01	1.2 k	C	5	125 m	
	R652	311-1028-00	100 k	CV	20	250 m	
	R654	317-0180-01	18	C	5	125 m	(723
	R655	317-0103-01	10 k	C	5	125 m	
	R656	311-0851-00	1 k	CP	20	250 m	
	R657	317-0221-01	220	C	5	125 m	
	R658	317-0561-01	560	C	5	125 m	
	R659	315-0181-01	180	C	5	250 m	(816)
	R660	317-0221-01	220	C	5	125 m	
	R661	317-0561-01	560	C	5	125 m	
	R662	317-0102-01	1 k	C	5	125 m	
	R663	317-0223-01	22 k	C	5	125 m	
	R664	317-0103-01	10 k	C	5	125 m	
	R666	317-0821-01	820	C	5	125 m	
	R667	317-0221-01	220	C	5	125 m	
	R668	317-0393-01	39 k	C	5	125 m	
	R669	311-0717-00	220	CP	20	250 m	
	R670	317-0122-01	1.2 k	C	5	125 m	
	R671	317-0393-01	39 k	C	5	125 m	
	R672	311-1306-01	100 k	CV	20	250 m	
	R673	315-0470-01	47	C	5	250 m	(925)
	R674	315-0473-02	47 k	C	5	250 m	(1159)
	R675	317-0105-01	1 M	C	5	125 m	
	R676	315-0824-00	820 k	C	5	125 m	
	R677	317-0221-01	220	C	5	125 m	
	R678	317-0271-01	270	C	5	125 m	
	R679	317-0820-01	82	C	5	125 m	
	R680	317-0101-01	100	C	5	125 m	
	R681	311-0717-00	220	CP	20	250 m	
	R682	317-0272-01	2.7 k	C	5	125 m	
	R683	317-0681-01	680	C	5	125 m	
	R684	317-0561-01	560	C	5	125 m	
	R685	317-0103-01	10 k	C	5	125 m	
	R686	317-0911-01	910	C	5	125 m	
	R687	317-0751-01	750	C	5	125 m	
	R688	317-0272-01	2.7 k	C	5	125 m	
	R689	317-0681-01	680	C	5	125 m	
	R690	317-0331-01	330	C	5	125 m	
	R691	311-0995-00	680	CP	20	250 m	
	R692	317-0471-01	470	C	5	125 m	(1109)
	R693	311-0712-00	100	CP	20	250 m	
	R694	317-0561-01	560	C	5	125 m	

	CIR REF	PART NUMBER	DESCRIPTION VALUE ohms	TYPE	TOL %	RATING W
	R695	317-0103-01	10 k	C	5	125 m
	R696	317-0123-01	12 k	C	5	125 m
	R697	311-0717-00	220	CP	20	250 m
	R698	317-0911-01	910	C	5	125 m
739)	R699	311-1212-00	500	CV	+40 − 0	125 m
723)	R700	317-0101-01	100	C	5	125 m
	R701	311-0712-00	100	CP	20	250 m
	R702	317-0751-01	750	C	5	125 m
	R703	317-0271-01	270	C	5	125 m
	R704	317-0221-01	220	C	5	125 m
	R705	317-0271-01	270	C	5	125 m
	R706	317-0154-01	150 k	C	5	125 m
	R707 A B	310-0679-00	111 k 900 k	CM	1	250 m
	R708	317-0105-01	1 M	C	5	125 m
723)	R709	317-0180-01	18	C	5	125 m
	R754	316-0122-01	1.2 k	C	10	250 m
** 21)	R755	307-0457-00	10 k	MO	5	3.25
		307-0161-00	12 k	MO	5	3.25
	R756	316-0122-01	1.2 k	C	10	250 m
	R757	317-0680-01	68	C	5	125 m
	R758	317-0331-01	330	C	5	125 m
	R759	317-0471-01	470	C	5	125 m
	R761	311-1046-00	250	CV	20	1
	R763	321-1296-48	12 k	MF	1	125 m
55)	R764	321-0852-48	36 k	MF	1	125 m
	R765	307-0356-00	3.3 k	MO	5	5.25
	R766	317-0101-01	100	C	5	125 m
	R767	317-0101-01	100	C	5	125 m
	R768	307-0356-00	3.3 k	MO	5	5.25
	R769	317-0103-01	10 k	C	5	125 m
	R771	316-0104-01	100 k	C	5	250 m
	R772	315-0104-01	100 k	C	5	250 m
	R773	317-0153-01	15 k	C	5	125 m
	R774	317-0153-01	15 k	C	5	125 m
	R775	317-0221-01	220	C	5	125 m
	R776	317-0152-01	1.5 k	C	5	125 m
	R777	317-0471-01	470	C	5	125 m
	R778	317-0332-01	3.3 k	C	5	125 m
	R779	303-0103-01	10 k	C	5	1
	R781	303-0273-01	27 k	C	5	1
	R782	317-0221-01	220	C	5	125 m
	R783	317-0152-01	1.5 k	C	5	125 m
	R784	317-0471-01	470	C	5	125 m
	R785	317-0332-01	3.3 k	C	5	125 m

* Two per Instrument ** Connected in parallel

CIR REF	PART NUMBER	DESCRIPTION VALUE ohms	TYPE	TOL %	RATING W	
R786	317-0222-01	2.2 k	C	5	125 m	(810)
R787	311-1091-00	6.8 k	CP	20	250 m	(810)
R788	316-0154-01	150 k	C	10	250 m	
R789	316-0154-01	150 k	C	10	250 m	
*R901	321-1289-43	10.1 k	MF	0.25	125 m	(1386)
*R902	321-0989-43	990 k	MF	0.25	125 m	(1386)
*R903	321-1389-43	111 k	MF	0.25	125 m	(1386)
*R904	321-0988-43	900 k	MF	0.25	125 m	(1386)
*R905A * B * C * D	310-0680-00	250 k 800 k 1 M 500 k	CM	1	250 m	
*R909	316-0470-01	47	C	10	250 m	
R1000	317-0103-01	10 k	C	5	125 m	
R1001	317-0103-01	10 k	C	5	125 m	
R1002	317-0104-01	100 k	C	5	125 m	
R1003	316-0106-03	10 M	C	10	250 m	
R1004	311-0854-00	100 k	CV	20	100 m	
R1005	317-0183-01	18 k	C	5	125 m	
R1006	317-0273-01	27 k	C	5	125 m	
R1007	317-0102-01	1 k	C	5	125 m	
R1008	317-0103-01	10 k	C	5	125 m	
R1009	317-0103-01	10 k	C	5	125 m	
R1011	316-0106-03	10 M	C	10	250 m	
R1012	317-0105-01	1 M	C	5	125 m	
R1013	317-0472-01	4.7 k	C	5	125 m	
R1014	311-0735-00	10 k	CP	20	250 m	
R1015	317-0473-01	47 k	C	5	125 m	
R1016	317-0103-01	10 k	C	5	125 m	
R1017	317-0184-01	180 k	C	5	125 m	
R1018	317-0563-01	56 k	C	5	125 m	
R1019	317-0104-01	100 k	C	5	125 m	
R1020	317-0272-01	2.7 k	C	5	125 m	
R1021	317-0123-01	12 k	C	5	125 m	
R1022	315-0273-02	27 k	C	5	250 m	
R1023	317-0221-01	220	C	5	125 m	
R1024	317-0154-01	150 k	C	5	125 m	
R1025	317-0473-01	47 k	C	5	125 m	

CIR REF	PART NUMBER	DESCRIPTION VALUE ohms	TYPE	TOL %	RATING W
R1026	311-0735-00	10 k	CP	20	250 m
(3045)B R1027	315-0473-00	47 k	C	5	250 m
R1028	317-0153-01	15 k	C	5	125 m
R1029	317-0273-01	27 k	C	5	125 m
R1030	317-0184-01	180 k	C	5	125 m
R1031	317-0393-01	39 k	C	5	125 m
R1032	317-0332-01	3.3 k	C	5	125 m
R1033	317-0822-01	8.2 k	C	5	125 m
R1034	317-0333-01	33 k	C	5	125 m
R1035	317-0333-01	33 k	C	5	125 m
R1036	303-0473-01	47 k	C	5	1
R1038	317-0274-01	270 k	C	5	125 m
R1042	317-0104-01	100 k	C	5	125 m
R1043	317-0204-01	200 k	C	5	125 m
R1044	317-0222-01	2.2 k	C	5	125 m
R1045	317-0184-01	180 k	C	5	125 m
R1046	317-0103-01	10 k	C	5	125 m
R1047	317-0103-01	10 k	C	5	125 m
R1048	317-0823-01	82 k	C	5	125 m
R1049	317-0272-01	2.7 k	C	5	125 m

CIR REF	PART NUMBER	DESCRIPTION VALUE ohms	TYPE	TOL %	RATING W
R1050	317-0154-01	150 k	C	5	125 m
R1051	317-0105-01	1 M	C	5	125 m
R1052	317-0103-01	10 k	C	5	125 m
R1053	311-0791-00	220 k	CP	20	250 m
R1054	317-0473-01	47 k	C	5	125 m
R1055	317-0103-01	10 k	C	5	125 m
R1056	317-0105-01	1 M	C	5	125 m
R1057	317-0333-01	33 k	C	5	125 m
R1058	317-0104-01	100 k	C	5	125 m
R1059	301-0103-00	10 k	C	5	500 m
R1061	315-0154-01	150 k	C	5	250 m
R1062	311-0756-00	47 k	CP	20	250 m
R1063	311-0801-00	470 k	CP	20	250 m
R1064	307-0136-00	18 k	MO	5	1.5
R1065	311-0750-00	22 k	CP	20	250 m
R1066	317-0222-01	2.2 k	C	5	125 m
R1067	317-0103-01	10 k	C	5	125 m
R1068	317-0123-01	12 k	C	5	125 m

CIR REF	PART NUMBER	DESCRIPTION
S1 S2 S3 S4	260-1296-00	Push (7 – button)
S61	311-1211-00	Rotary (with R208)
S62	260-1295-00	Push (3 – button)
S65	260-1322-00	Push (1 – button)
S66	260-1106-02	Push (1 – button)
S67	311-1209-00	Pull (with R118 and R119)
S201	260-1297-00	Rotary (23 – position)
(2971) S401	311-1867-00	Rotary (with R323)

CIR REF	PART NUMBER	DESCRIPTION
S601	260-1299-00	Push (1 – button)
S602	260-1299-00	Push (1 – button)
S603	260-1204-00	Push (2 – button)
S604	260-1298-00	Push (1 – button)
S605	260-1298-00	Push (1 – button)
S606	260-1298-00	Push (1 – button)
S751	260-1089-00	Push (2 – button)
*S901	260-1307-00	Slide (3 – position)
*S902	260-1051-01	Rotary (12 – position)
S1001	260-1320-00	Push (3 – button)
S1002	260-1320-00	Push (3 – button)
S1003	260-1320-00	Push (3 – button)
S1004	260-1321-00	Lever (3 – position)
T301	120-0466-01	E.H.T. oscillator transformer
T401	120-0828-02	Power transformer

* Two per instrument

CIR REF	PART NUMBER	DESCRIPTION			
TR1	151-0317-00	BC109C	Si	NPN	
TR2	151-0242-00	2N3904	Si	NPN	
TR3	151-0242-00	2N3904	Si	NPN	
TR4	151-0242-00	2N3904	Si	NPN	
TR5	151-0242-00	2N3904	Si	NPN	
TR62	151-0317-00	BC109C	Si	NPN	
TR64	151-0257 03	BSX20	Si	NPN	(2876)
TR65	151-0602-00	BF258	Si	NPN	(2876)
TR66	151-0317-00	BC109C	Si	NPN	
TR67	151-0602-00	BF258	Si	NPN	(2876)
TR68	151-0317-00	BC109C	Si	NPN	
TR69	151-0317-00	BC109C	Si	NPN	
TR71	151-1052-00	BFW1052	Si	N-Channel	
TR72	151-0317-00	BC109C	Si	NPN	
TR73	151-0317-00	BC109C	Si	NPN	
TR74	151-0317-00	BC109C	Si	NPN	
TR75	151-0127-03	BSX20	Si	NPN	
TR76	151-0317-00	BC109C	Si	NPN	
TR77	151-0257-01	BF305	Si	NPN	
TR78	151-0317-00	BC109C	Si	NPN	
TR79	151-0317-00	BC109C	Si	NPN	
TR81	151-0257-01	BF305	Si	NPN	
TR82	151-0490-00	FRB750 Ferranti	Si	NPN	(3100)
TR301	151-0372-00	2N5401	Si	PNP	
TR302	151-0311-00	MJE340	Si	NPN	
TR303	151-0317-00	BC109C	Si	NPN	
TRP304	151-0371-00	Photo transistor	Si	NPN	
TR306	151-0490-00	FRB750 Ferranti	Si	NPN	(3137)
TR307	151-0257-01	BF305	Si	NPN	
TR601	151-1036-00	Dual FET Tektronix	Si	N-Channel	
TR602		Specification			
TR603	151-0127-02	2N2369	Si	NPN	
TR604	151-0127-02	2N2369	Si	NPN	
TR605	151-0127-02	2N2369	Si	NPN	
TR606	151-0127-02	2N2369	Si	NPN	
TR607	151-0127-02	2N2369	Si	NPN	
TR608	151-0127-02	2N2369	Si	NPN	
TR609	151-0127-02	2N2369	Si	NPN	
TR611	151-0127-02	2N2369	Si	NPN	

	CIR REF	PART NUMBER	DESCRIPTION		
(759)	TR612	151-0127-03	BSX20	Si	NPN
(723)	TR613	151-0127-03	BSX20	Si	NPN
	TR614	151-0242-00	2N3904	Si	NPN
	TR615	151-0242-00	2N3904	Si	NPN
	TR616	151-0490-00	FRB750	Si	NPN
	TR617	151-1036-00	Dual FET Tektronix specification	Si	NPN
	TR618				
	TR619	151-0127-02	2N2369	Si	NPN
	TR621	151-0127-02	2N2369	Si	NPN
	TR622	151-0127-02	2N2369	Si	NPN
	TR623	151-0127-02	2N2369	Si	NPN
	TR624	151-0127-02	2N2369	Si	NPN
	TR625	151-0127-02	2N2369	Si	NPN
	TR626	151-0127-02	2N2369	Si	NPN
	TR627	151-0127-02	2N2369	Si	NPN
	TR628	151-0127-02	2N2369	Si	NPN
	TR629	151-0127-02	2N2369	Si	NPN
	TR751	151-0127-02	2N2369	Si	NPN
	TR752	151-0257-01	BF305	Si	NPN
	TR753	151-0257-01	BF305	Si	NPN
(2510)	TR754	151-0188 00	2N3906	Si	PNP
	TR755	151-0188-00	2N3906	Si	PNP
	TR756	151-0188-00	2N3906	Si	PNP
	TR757	151-0188-00	2N3906	Si	PNP
	TR1000	151-0317-00	BC109C	Si	NPN
	TR1001	151-0127-02	2N2369	Si	NPN
	TR1002	151-0127-02	2N2369	Si	NPN
	TR1003	151-0127-02	2N2369	Si	NPN
	TR1004	151-0317-00	BC109C	Si	NPN
	TR1005	151-0311-00	MJE340	Si	NPN
	TR1006	151-0311-00	MJE340	Si	NPN
	TR1007	151-0127-02	BSX20/2N2369	Si	NPN
	TR1008	151-0311-00	MJE340	Si	NPN
(755)	TR1009	151-0317-00	BC109C	Si	NPN
	V61	150-0069-00	Neon Capless 3L		
	V301	154-0737-00	CRT Tektronix model 5642/200 P31		

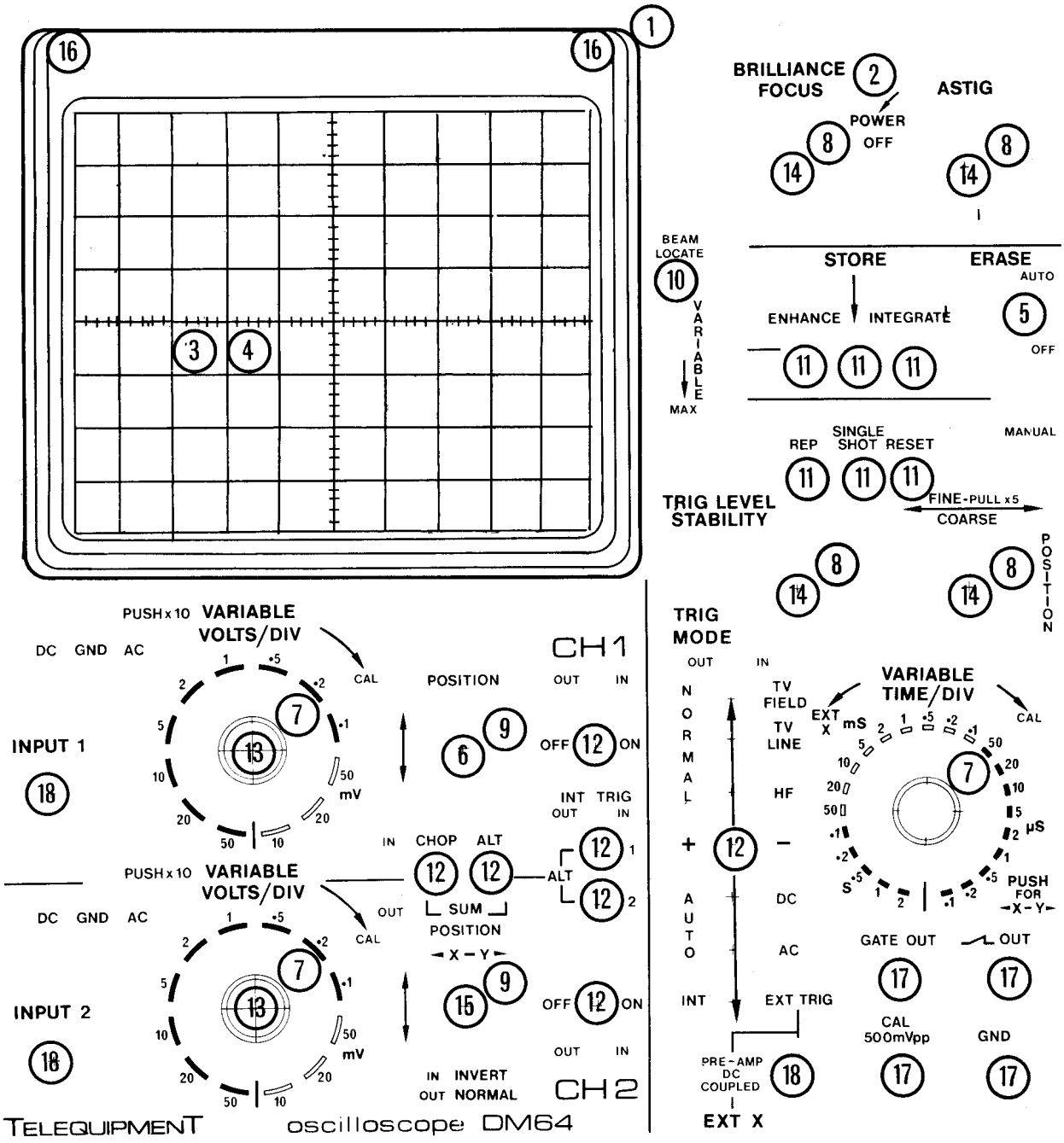
BRILLIANCE
FOCUS
ASTIG
POWER
OFF
BEAM
LOCATE
VARIABLE
MAX
STORE
ERASE
AUTO
ENHANCE
INTEGRATE
OFF
REP
SINGLE
SHOT
RESET
MANUAL
TRIG LEVEL
STABILITY
FINE-PULL x5
COARSE
POSITION
TRIG
MODE
OUT
IN
NORMAL
AUTO
INT
TV
FIELD
TV
LINE
HF
DC
AC
EXT TRIG
PRE-AMP
DC
COUPLED
EXT X
VARIABLE
TIME/DIV
CAL
PUSH
FOR
X-Y
GATE OUT
OUT
CAL
500mVpp
GND
PUSH x 10
VARIABLE
VOLTS/DIV
DC GND AC
INPUT 1
POSITION
CH1
OFF
ON
INT TRIG
CHOP
ALT
SUM
POSITION
X-Y
INPUT 2
INVERT
NORMAL
CH2
TELEQUIPMENT
oscilloscope DM64

Front Panel

MECHANICAL

	PART NO.	DESCRIPTION	LOCATION *
	* Numbers quoted refer to the front panel (opposite).		
	200-1187-00	Bezel, Lighthood	1
	378-0597-00	Bulb, neon	2
	131-0260-00	Connector Assy	rear panel
	200-1766-00	Cover, Rear	
(1320)	390-0448-02	Cover RHS	
(1320)	390-0448-03	Cover LHS	
	343-0212-00	Ends, Handle	
	348-0169-00	Feet, raising front	
	348-0168-00	Feet, fixed rear	
	378-0605-02	Filter	3
(2971)	331-0232-03	Graticule clear	4
	348-0160-00	Grommet	CRT
	348-0162-00	Grommet	EHT
	367-0101-02	Handle	
	214-1070-00	Insulator Stand Off (6BA)	
	366-0215-02	Knob, Grey	5
(TQ031)	366-1024-02	Knob, Grey	6
	366-1352-00	Knob, Grey	7
	366-1353-00	Knob, Grey	8
	366-1365-00	Knob, Grey	9
	366-1414-05	Knob, Push Button	10
	366-1414-00	Knob, Push Button, Grey	11
	366-1414-01	Knob, Push Button, Grey/Red	12
(1334)	366-1481-00	Knob, Red	13
	366-1355-00	Knob, Red	14
	366-1364-00	Knob, Red	15
	366-1481-00	Knob, Red	
	366-1074-00	Knob, Black Tapered	Trace Rotation
	161-0084-00	Lead c/w Socket (U.K.)	Power
(730)	161-0084-01	Lead c/w Socket (U.S.A.)	Power
	220-0607-00	Nut (Special)	16
	131-1021-00	Pin PCB. Quick Release Amp.	
	134-0102-00	Plug 7 pin	Voltage Selector
	213-0248-00	Screw, set 3 mm Lg.	9, 13, 14, 15
	213-0249-00	Screw, set 5 mm 1g.	7, 8,
	136-0381-02	Socket Assy.	rear panel
	131-0645-00	Socket, Side Pin, plastic Moulding	CRT
	131-0659-00	Socket Side Pin, rubber cover	CRT
	136-0457-01	Socket Assembly Grey	17
	131-0651-00	Socket BNC	18
	136-0295-00	Socket, R557	PC115
(1093)	361-0254-00	Spacer	R68, R80
	361-0308-00	Spacer Brass	PC119
	385-0206-00	Spacer, Hex, Threaded	S603
	361-0283-00	Spacer Mounting	PC115
	361-0266-00	Spacer 6BA (.7/8)	PC110, PC111
	361-0243-00	Spacer 6BA (3/4)	PC110, PC111
	385-0213-00	Spacer, Hex 6BA (82mm)	PC116
	361-0429-00	Spacer 6BA	rear panel
	214-1092-00	Tag, Stocko 6326A	
	210-1075-00	Washer, foot packing	
	334-1470-09	Front Panel	

ASSEMBLIES

ASSEMBLY	PART NUMBER	INCLUDES CIR REF.
Attenuator	262-0942-00	C901 to C909, C911 to C914, R618, R624, R699, R702, R901 to R905, R909, S902.
EHT (PC123)	670-1703-03	C303, C304, C307, C308, D302, D304 to D309, LP301, LP302, PTR304, R309 to R316, R325 to R327, R332, R333, T301, TR302. (871)
96) PC110	670-1615-02 or 670-1615-06	C2 to C4, C6 to C8, C11 to C16, C60 to C76, C77, C78, C301, C304, C305, D1, D64, D66 to D69, D71 to D73, D83, D85, D301, L61, R1 to R19, R21 to R39, R41, R42, R60 to R80, R82 to R97, R103 to R117, R121 to R125, R128, R131 to R147, R151, R152, R317, R318, R319, R328, R329, R331, (G2787) R1004, S1 to S4, S65, TR1 to TR5, TR62, TR64 to TR69, TR71 to TR79, TR81, TR82.
PC111	670-1701-00	C301, C302, C309, C401 to C409, C411 to C419, C421, C422, C1000 to C1009, C1013 to C1019, D301, D303, D401 to D409, D411 to D419, D307, D421, D422, D1001 to D1009, D1011 to D1019, D1021 to D1026, R301 to R308, R324, R326, R402, R404 to R409, R411 to R415, R417, R418, R422, R1000 to R1003, R1005 to R1009, R1011 to R1014, R1016 to R1030, R1032 to R1038, R1040, R1042 to R1067, TR301, TR303, TR306, TR1001 to TR1009.
32) PC115	670-1617-02 or 670-1617-03	C600 to C609, C611 to C613, C616, C618 to C622, C624 to C629, C631 to C638, C641, C753, C754, D601, D603 to D612, L601 to L603, R601 to R612, R614 to R623, R625 to R632, R634 to R638, R640 to R651, R655 to R664, R666, R668 to R671, R674 to R695, R697, R698, R701 to R708, R754 to R759, R763 to R769, TR601 to TR629, TR751 to TR753.

ASSEMBLY	PART NUMBER	INCLUDES CIR REF.
PC117	262-0944-00	S604, S605 and S606.
Single-Shot Switch	262-0935-00	D65, R98, R99, R101, R102, S62, V61.
Timebase Switch	262-0934-00	D74 to D79, D81, D82, C201 to C207, R126, R127, R129, R202 to R209, R211 to R218, R673, R786, R787, S66, S201.
'Y' Amp Cableform	644-0027-02	*C614, *C623, C755, C756, C757, R633, R652, R672, R673, R771 to R779, R781 to R785, TR754 to TR757, S601, S602, S751. (1 *Mounted on S603.

CHAPTER 6
CIRCUIT DIAGRAMS

To minimize the risk of misinterpretation of component values on circuit diagrams, the decimal point has been replaced by the multiplier or sub-multiplier of the basic unit. For instance, 2.2 megohms is shown as 2M2 and 1.8 picofarads is shown as 1p8.

To aid the reader further, in addition to the block Circuit Reference Table in Chapter 5.1, to locate a component in the circuit diagrams, a table is provided at the top of each circuit diagram, in which the circuit reference will appear, where practicable, directly above the component being sought.

PRINTED CIRCUIT

Blue shows the rear track as seen through the board. Red the component side track and those components referred to in Chapter 4, Calibration.

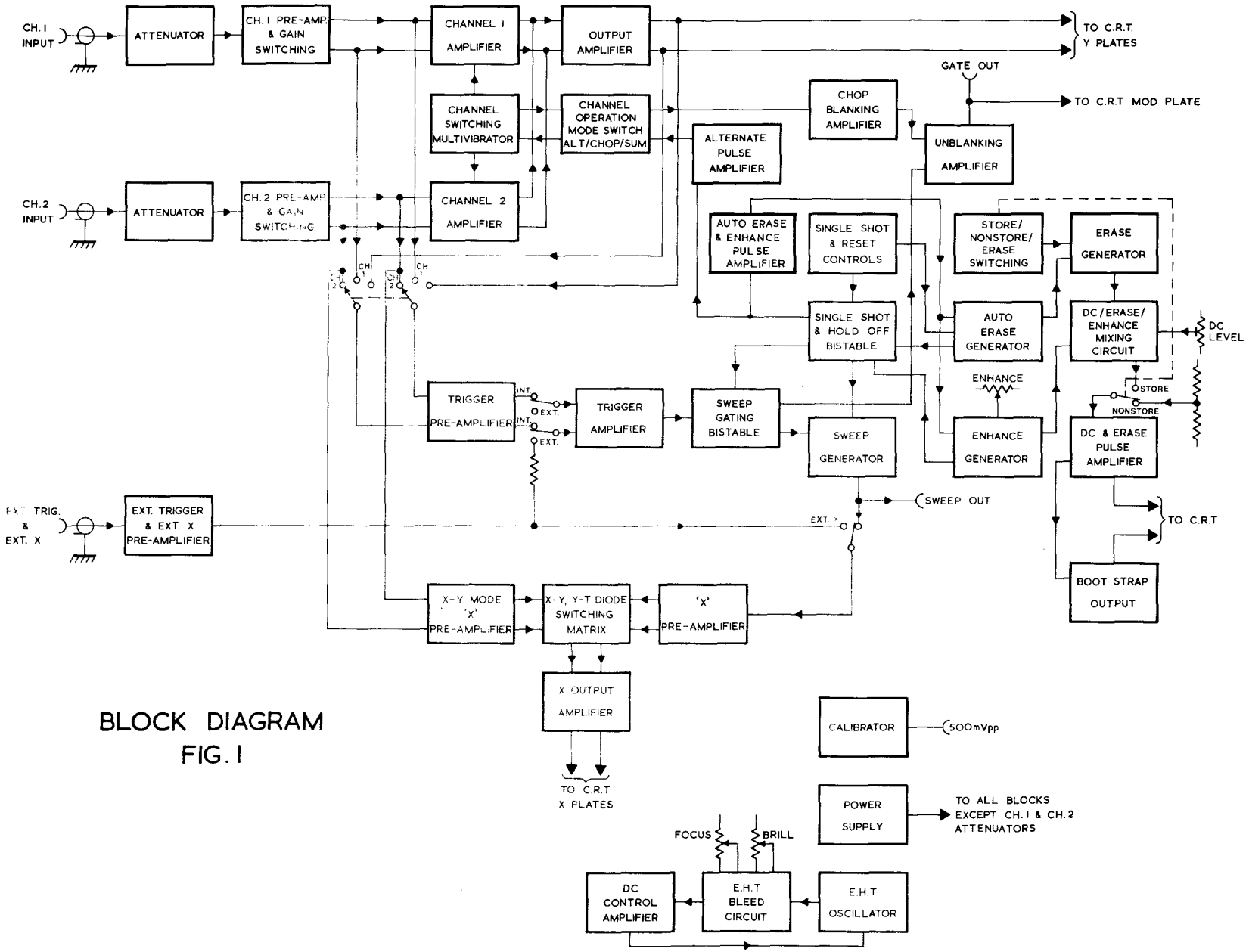

BLOCK DIAGRAM
FIG. 1

MISC	S901 S902 S902 S902
C	901 902 903 904 905 906 907 908 909 911 912 913 914
R	901 909 902 903 904 905A 905B 905C 905D

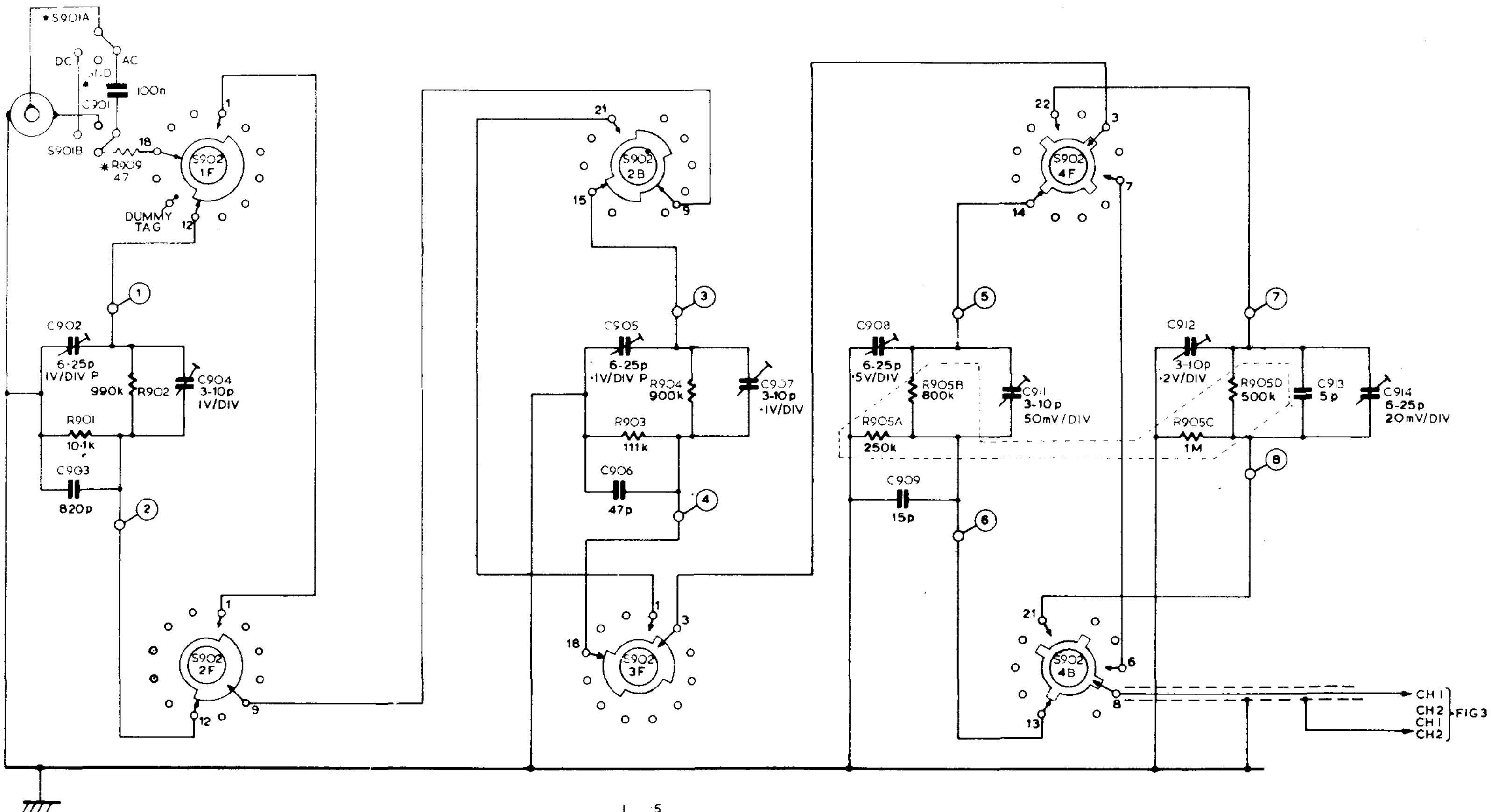

NOTES -
1 (N.) DENOTES TAG NOS. ON PC.73
2. SWITCHES SHOWN IN FULLY ANTI-CLOCKWISE POSITION
3 ✱ DENOTES COMPONENTS NOT MOUNTED ON PC. 73
4 76/1 DENOTES PC76/EYELET No1.

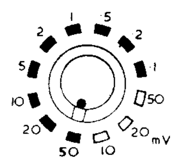

S902 (VOLTS/DIV) SWITCH POSITIONS

ATTENUATOR CIRCUIT FIG. 2

RESISTORS	603 601 605 604 602A 608 613 606 607 617 618 611 612 602B 614 620 622 624 625 626 615 616 609 623 637 628 619 621 629 632 654 643 633 696 680 644 645 641 634 636 639 650 631 635 610 660 646 647 642 648 652 655 656 664 657 651 663 662 666 670 667 673 679 669 672 671 661 668 658 677 676 700 686 687 674 675 659 678 682 683 684 685 692 690 697 699 701 703 681 688 691 693 694 695 689 698 702 707B 704 705 707A 706 708 709
CAPACITORS	603 604 601 602 605 607 638 606 600 608 639 612 609 611 613 637 620 618 621 623 622 619 616 641 642 628 627 625 632 615 624 631 626 629 635 633 634 636 610 614
MISC	S66 S602 D601 S601 TR609 TR607 TR605 TR603 TR601 S603b S603a TR628 TR611 D603 TR608 TR606 TR604 D604 TR602 TR612 L601 S605 L603 D605 TR614 D606 L602 TR615 D611 D608 TR617 S606 S601 TR626 D610 TR625 TR622 TR619 S603b TR613 S606 S603a S604 TR629 TR627 D612 TR624 TR623 TR621 TR618

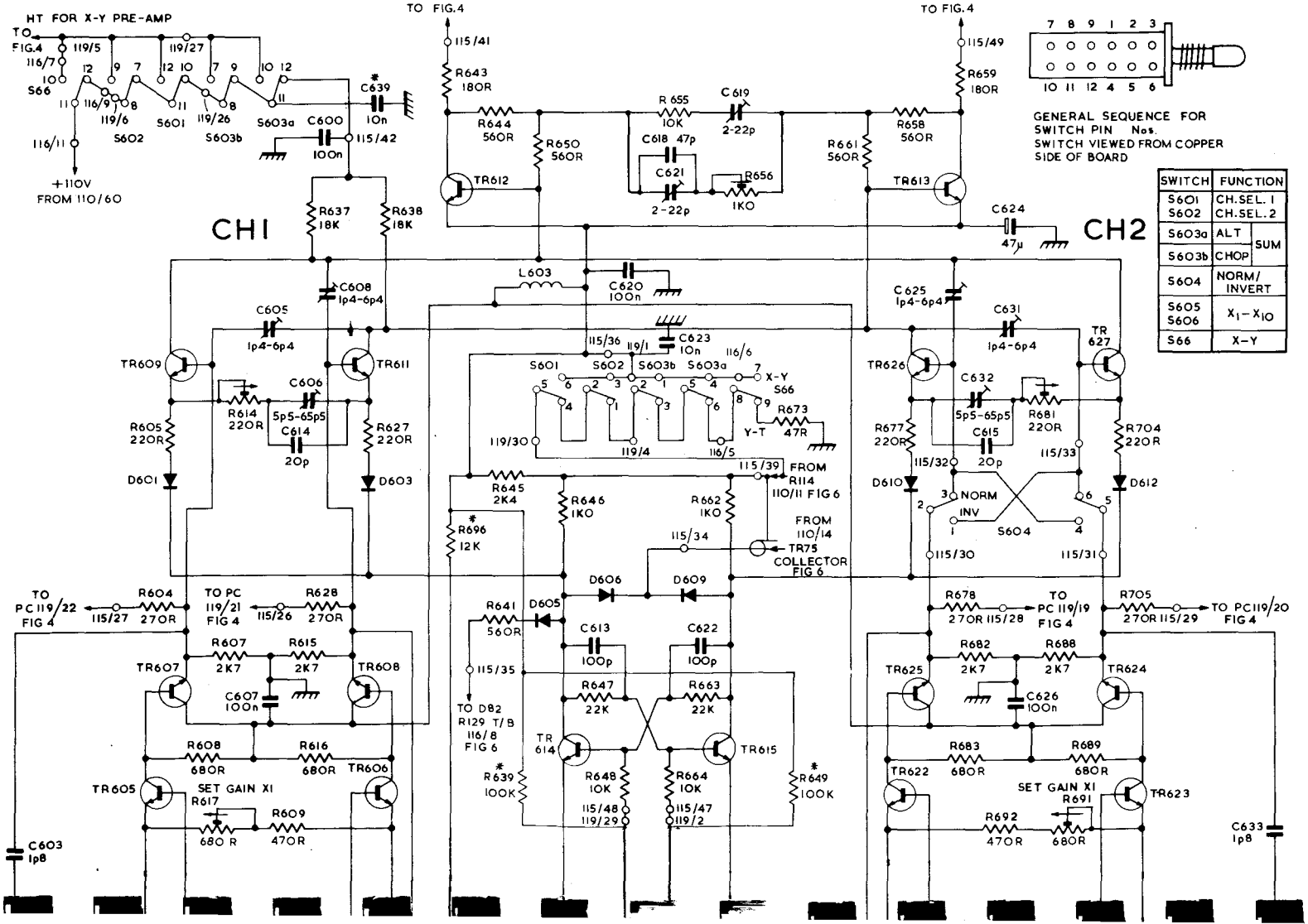

SWITCH	FUNCTION	
S601	CH.SEL. 1	
S602	CH.SEL. 2	
S603a	ALT	SUM
S603b	CHOP	SUM
S604	NORM/INVERT	
S605 S606	$X_1 - X_{10}$	
S66	X-Y	

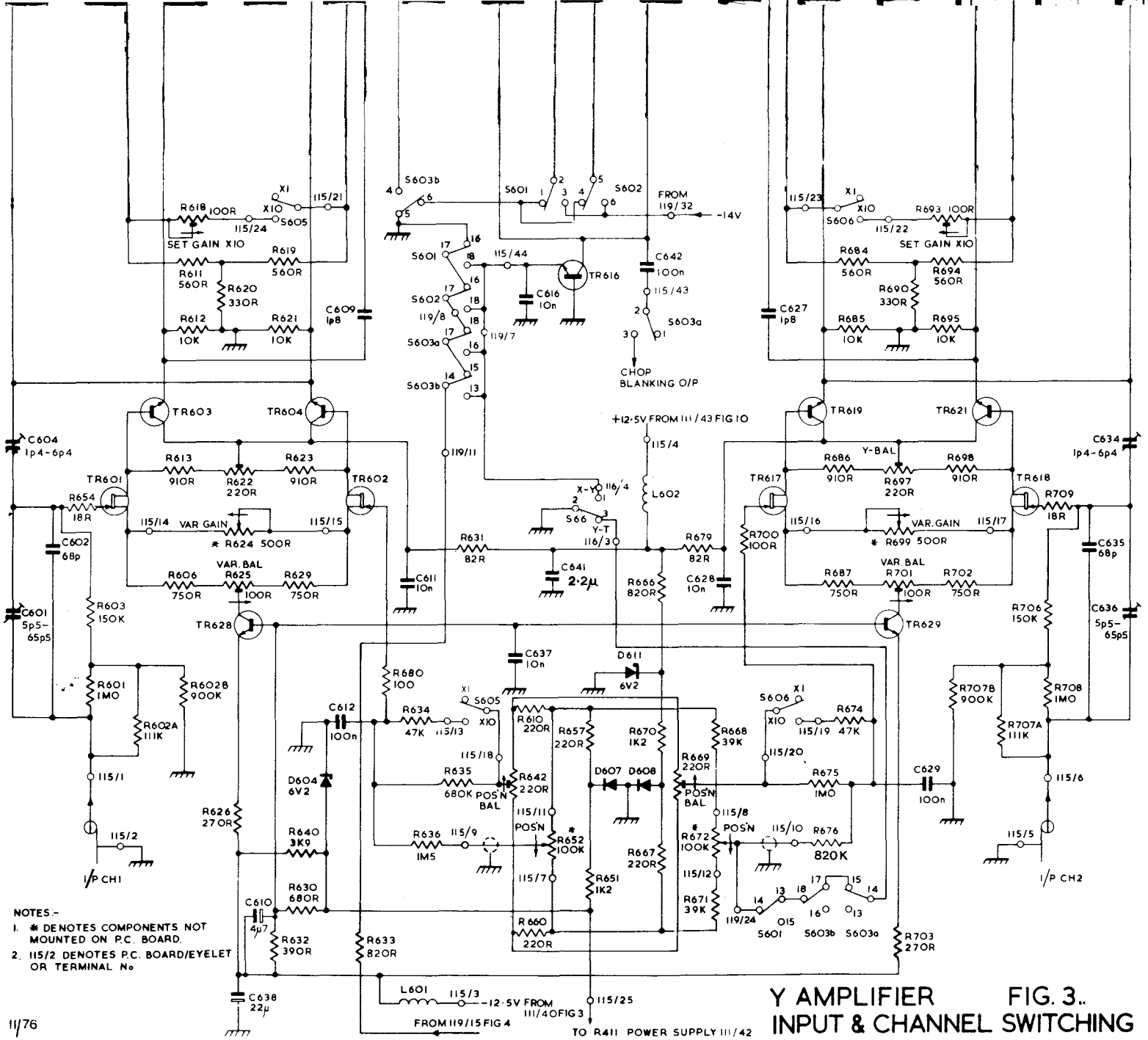

NOTES:-

1. * DENOTES COMPONENTS NOT MOUNTED ON P.C. BOARD.
2. 115/2 DENOTES P.C. BOARD/EYELET OR TERMINAL No

11/76

Y AMPLIFIER INPUT & CHANNEL SWITCHING

FIG. 3..

RESISTORS	761	759 754 755 &A 756	763	757 758	764		769	765 766 767 768	789	788		771 772
CAPACITORS					753	754					751 752	755 756
MISCELLANEOUS	L751		TR751					TR752 TR753	D751 D752			

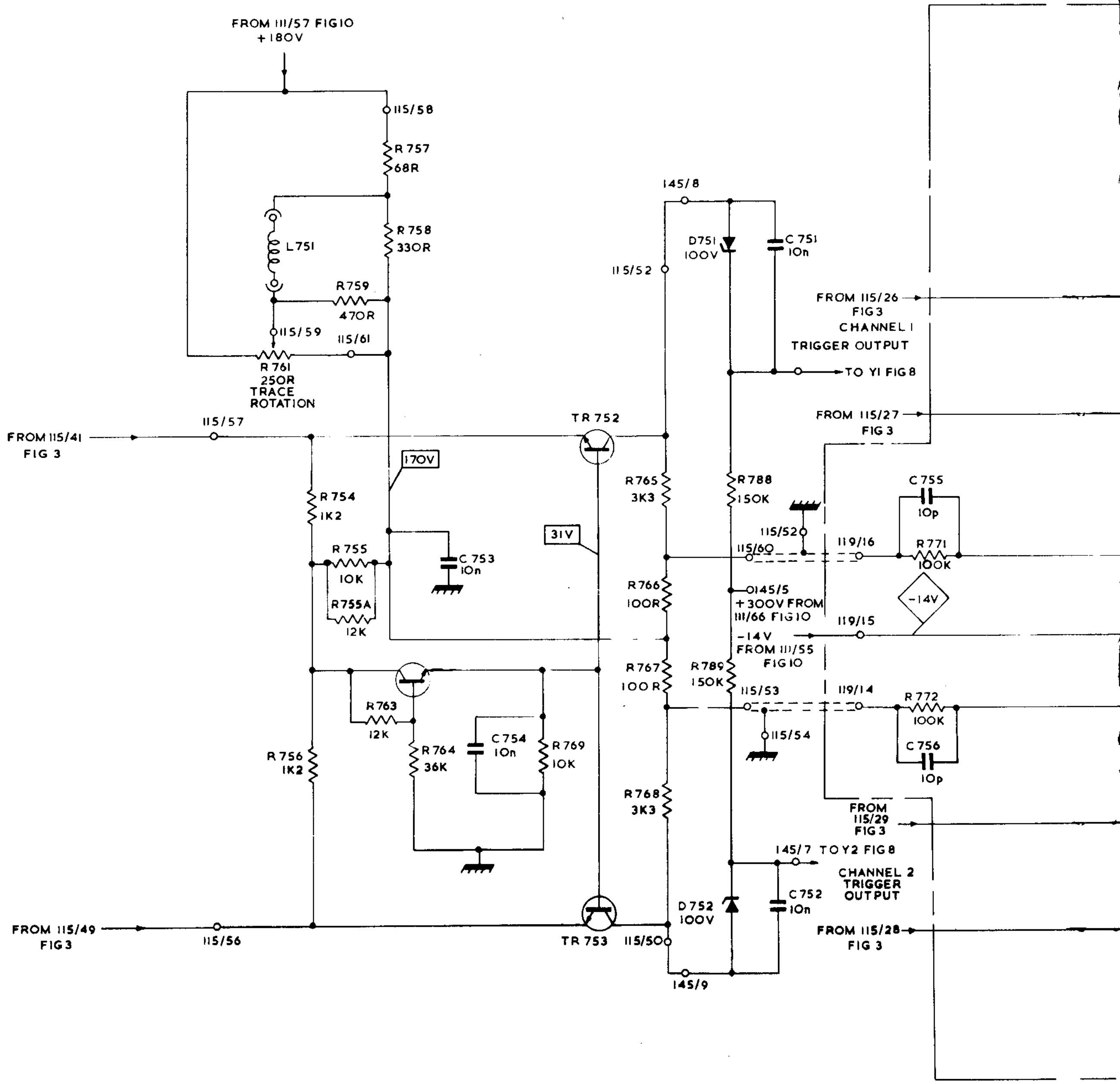

NOTES 1. CIRCUIT SHOWN WITH CHANNEL 1. TRIG SELECTED.

2. 76/45 DENOTES PC BOARD No./EYELET OR TERMINAL

3. * DENOTES COMPONENTS NOT MOUNTED ON PC BOARD

4 ◇ COMMON -12V.

11/76

773
774
775
776
777
778
782
783
784
785
786
787
757
S751b S751a
TR754
TR755
TR756
TR757

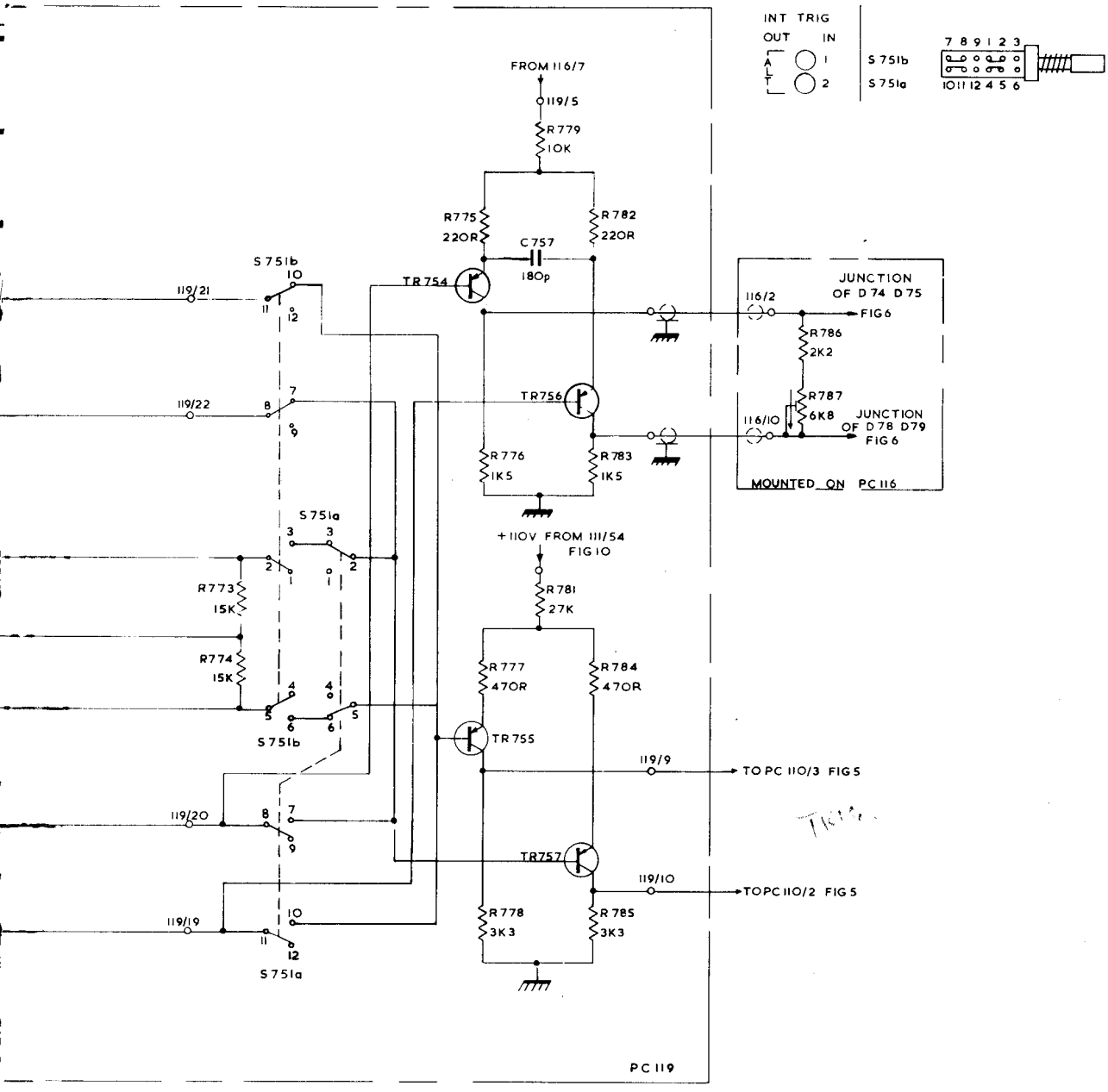

Y-AMPLIFIER OUTPUT & TRIGGER
PRE-AMPLIFIER CIRCUIT FIG 4

11/76

RESISTORS	10 41 42 1 5 2 3 4 6 7 8 9 11 12 20 13 14 15 16 17 18 19 21
CAPACITORS	2 3 4 7 8 6 6A
MISC	S4 TR1 S3a S3b S3a D3 TR2 TR3 S3b S3a

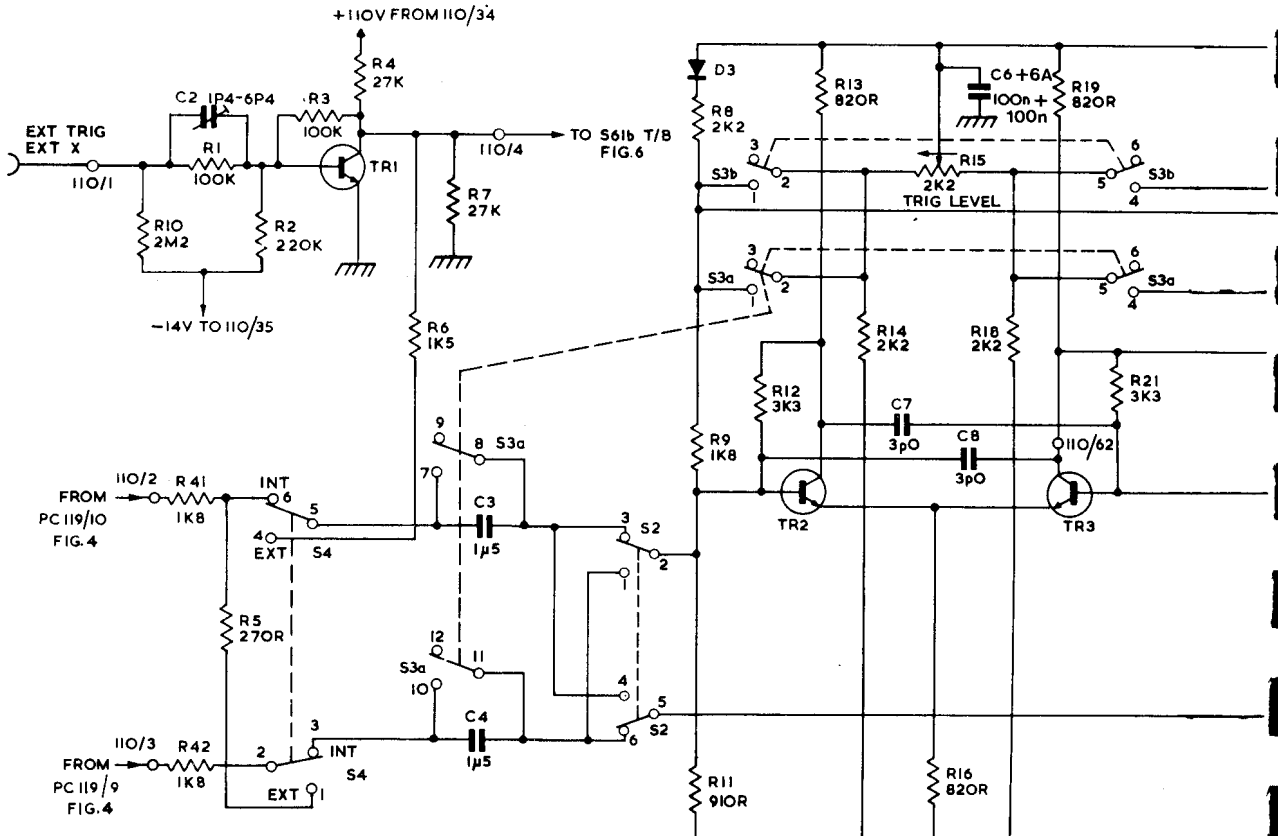

OUT	IN	FRONT PANEL MARKING	SWITCH REF
NORMAL	TV FIELD		S1a
	TV LINE		S1b
	HF		S1c
+	−		S2
AUTO	DC		S3a
	AC		S3b
INT	EXT		S4

TRIGGER

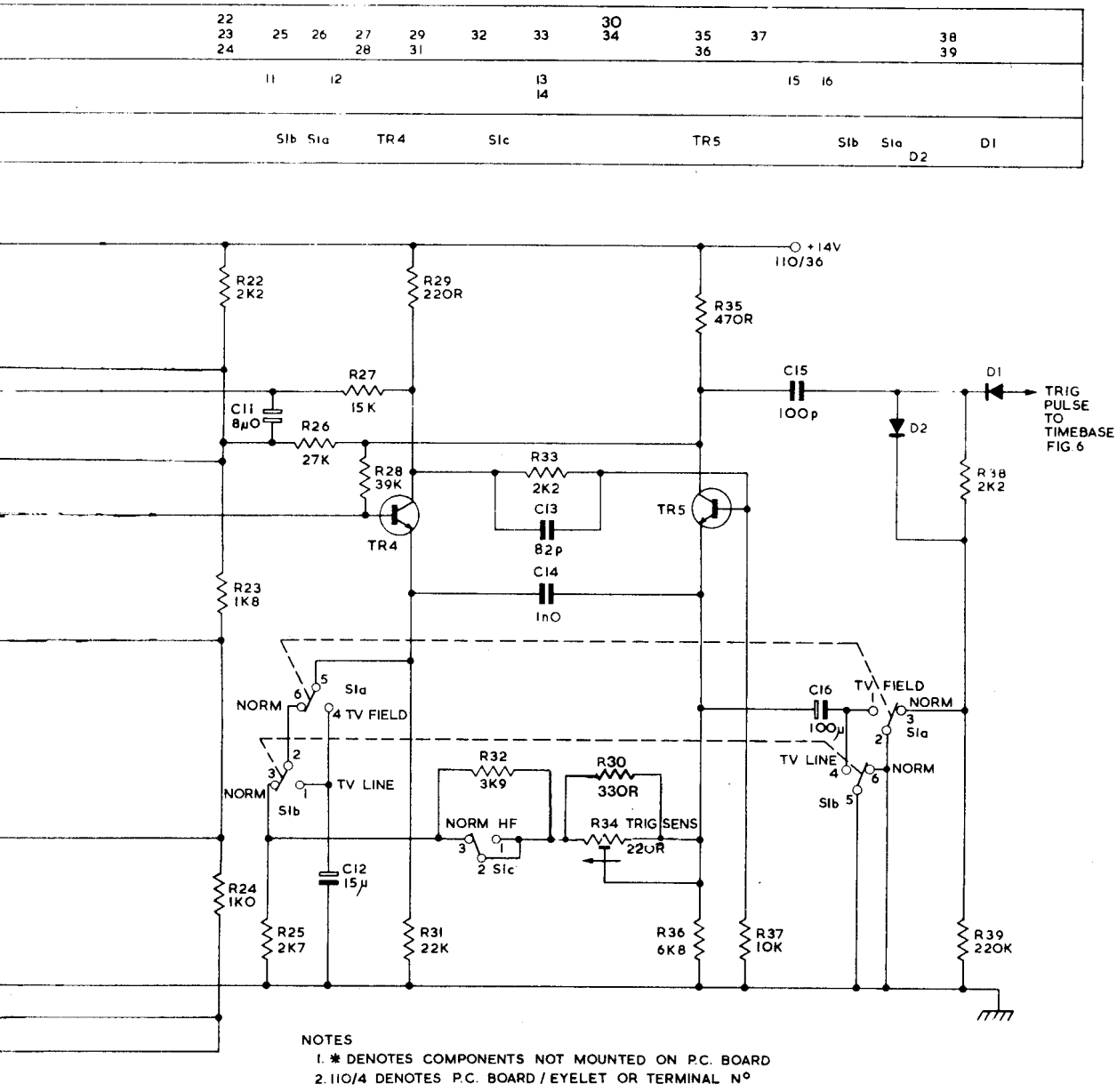

NOTES
1. * DENOTES COMPONENTS NOT MOUNTED ON P.C. BOARD
2. 110/4 DENOTES P.C. BOARD / EYELET OR TERMINAL N°

CIRCUIT FIG. 5

RESISTORS	65 62 60 66 67 68 69 70 71 71A 72 80 75 74 73 77 78 82 83 148 79 84 76 85 86 145 64 61 87 RT RS 81 89 91 63 92 93 88 94 95 96 97 98 99 101
CAPACITORS	60 76 61 90 62 73 82 77 91 70 CT 63 64
MISC	TR64 TR62 D64 TR65 TR66 S65a TR67 TR68 D66 TR69 D67 D68 D69 TR71 TR72 D71 S61b

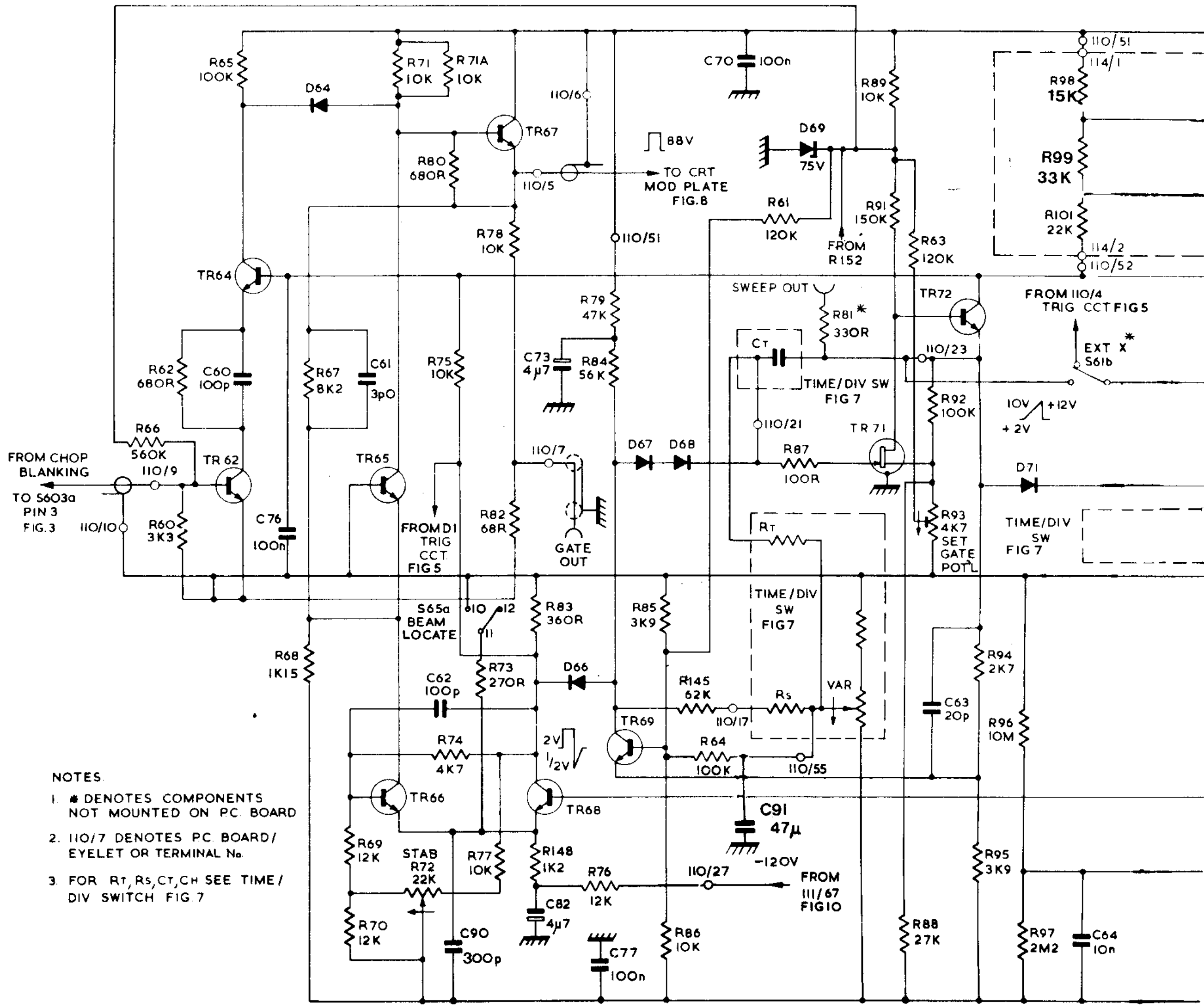

NOTES.

1. * DENOTES COMPONENTS NOT MOUNTED ON P.C. BOARD
2. 110/7 DENOTES P.C. BOARD/EYELET OR TERMINAL No.
3. FOR RT, RS, CT, CH SEE TIME/DIV SWITCH FIG.7

TIMEBASE X-AMP

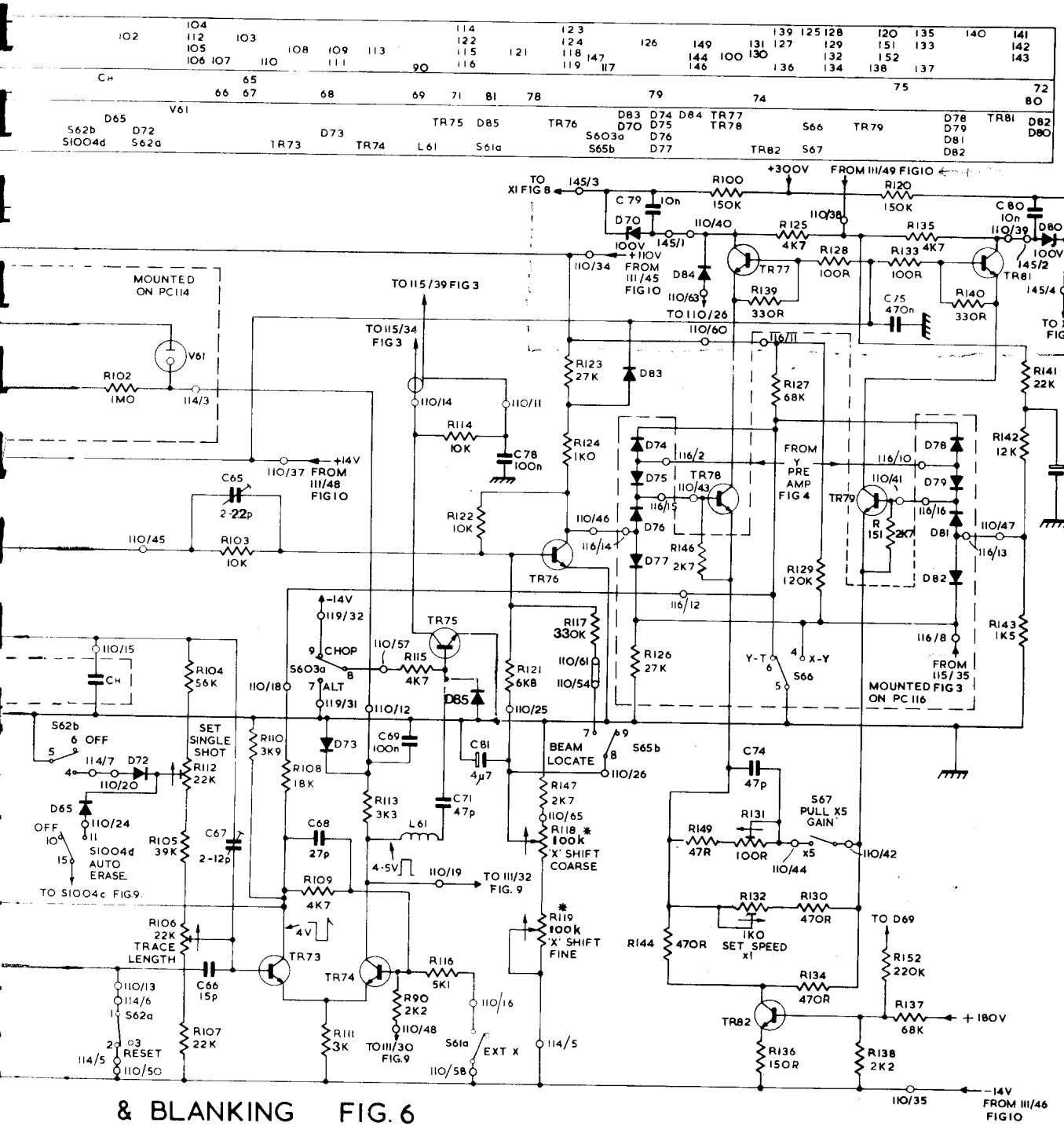

& BLANKING FIG. 6

11/76

RESISTORS	202	203	204	205	206	207	208	209	211	212	213	214	215	216	217	218
CAPACITORS	201 202	203		204					205		206 207	209	208			

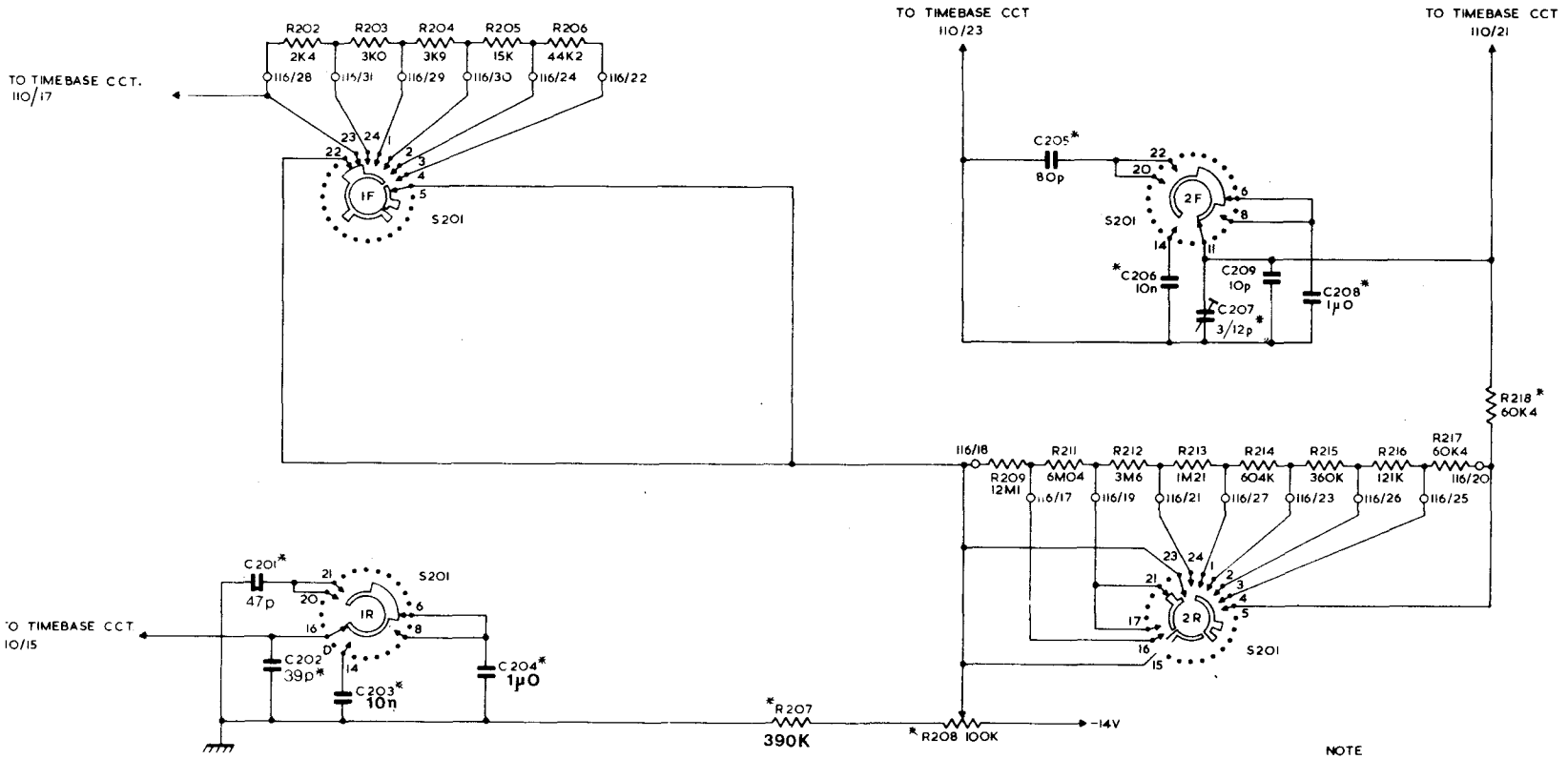

NOTE
1. * DENOTES COMPONENTS NOT MOUNTED ON PC 11
2. 110/15 DENOTES PC BOARD/ EYELET OR TERMINAL No

TIME / DIV. SWITCH

FIG. 7

64

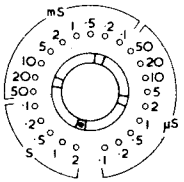

TIME/DIV SWITCH POSITIONS
SWITCH SHOWN IN FULLY ANTI-CLOCKWISE POSITION

11/76

RESISTORS	301 302 303 304 306 305 307 315 326 319 333 325 332 331 329 328
CAPACITORS	301 302 307 303 304 308 309
MISC.	TR301 D301 TR302 TR307 D302 D303 D309 TR303 T301 S1003 D308 D306 D304 D305

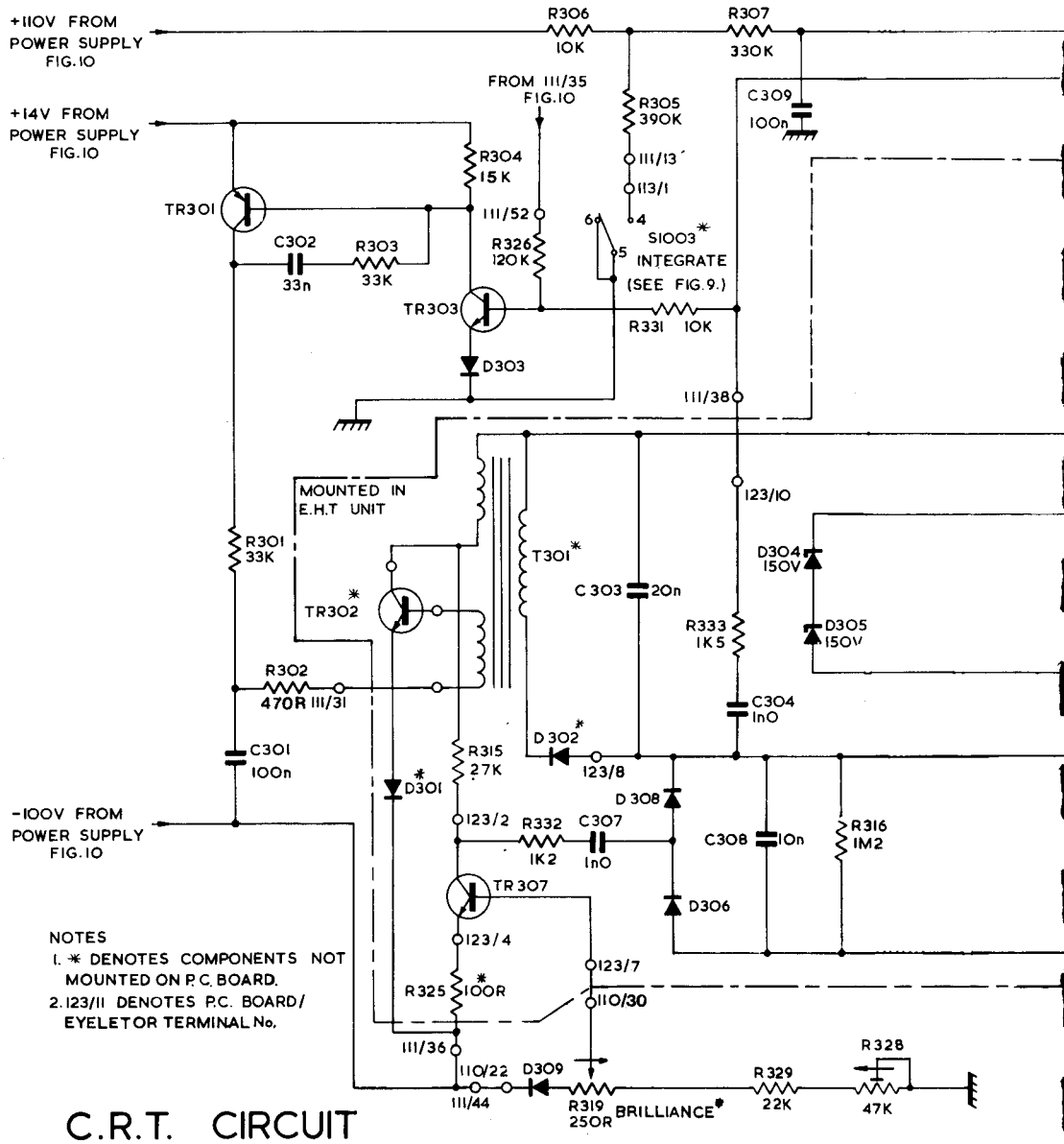

NOTES
1. * DENOTES COMPONENTS NOT MOUNTED ON P.C. BOARD.
2. 123/11 DENOTES P.C. BOARD/ EYELET OR TERMINAL No.

C.R.T. CIRCUIT
FIG. 8

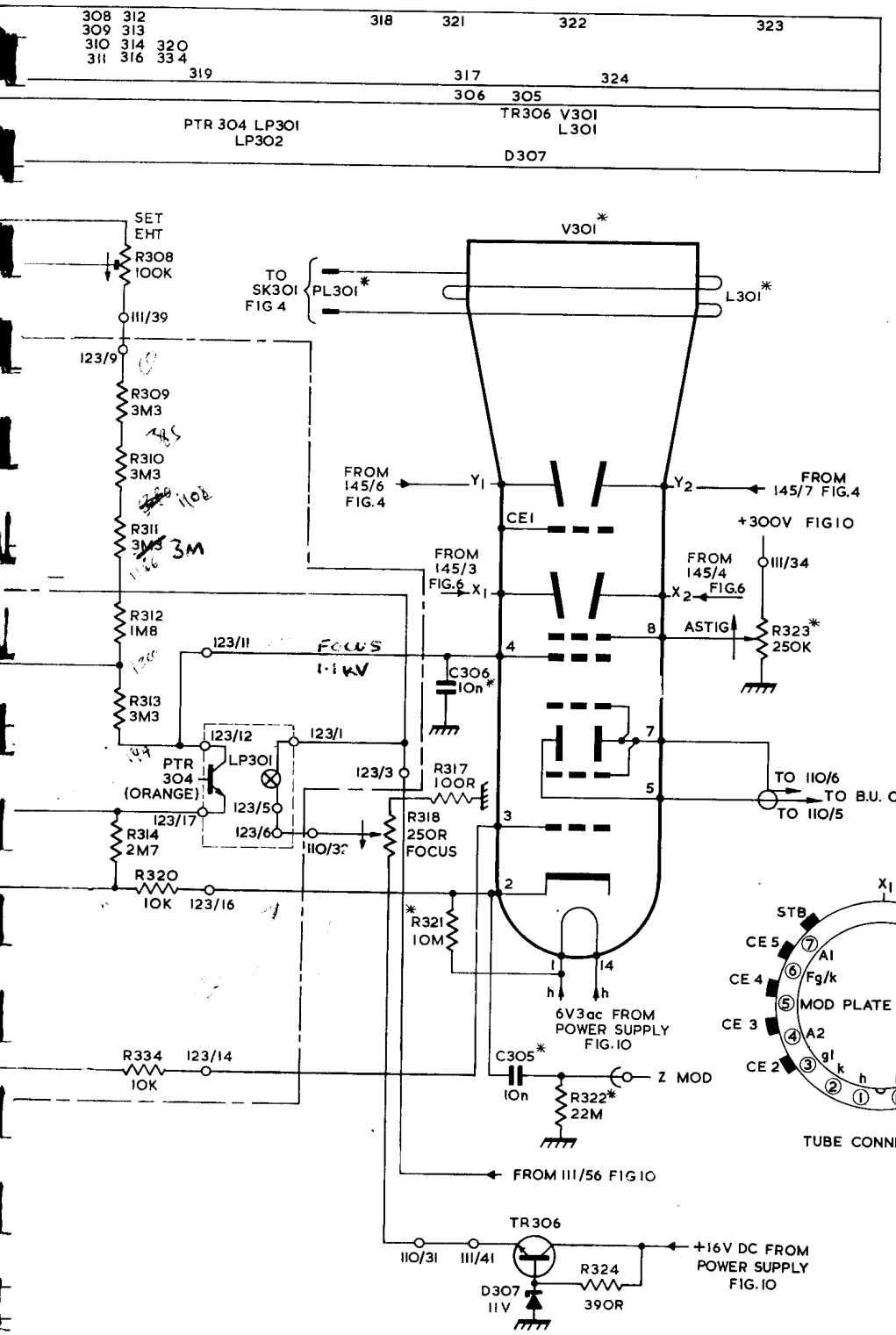
308 312
309 313
310 314 320
311 316 334
318
321
322
323
319
317
324
306 305
TR306 V301
L301
PTR 304 LP301
LP302
D307
SET EHT
R308 100K
111/39
123/9
R309 3M3
R310 3M3
R311 3M3
R312 1M8
R313 3M3
123/11
FOCUS 1·1kV
123/12
123/1
PTR 304 (ORANGE)
LP301
123/5
123/17
123/6
R314 2M7
R320 10K
123/16
R334 10K
123/14
V301*
TO SK301 FIG 4
PL301*
L301*
FROM 145/6 FIG.4
Y1
Y2
FROM 145/7 FIG.4
CE1
+300V FIG10
FROM 145/3 FIG.6
X1
X2
FROM 145/4 FIG.6
111/34
8
ASTIG
R323* 250K
4
C306 10n*
7
TO 110/6
TO B.U. CCT.
TO 110/5
5
123/3
R317 100R
R318 250R FOCUS
3
2
R321* 10M
1
14
h
6V3ac FROM POWER SUPPLY FIG.10
C305* 10n
R322* 22M
Z MOD
FROM 111/56 FIG10
TR306
110/31
111/41
R324 390R
D307 11V
+16V DC FROM POWER SUPPLY FIG.10
STB
CE5
CE4
CE3
CE2
A1
Fg/k
MOD PLATE
A2
gl
k
A3
FGGI
FGh
FGh
FGGI
TUBE CONNECTIONS

ESISTORS	1002 1004 1005 1006 1003 1000 1007 1008 1001 1009 1013 1014 1011 1012 1015 1016 1017 1018 1019 1021 1020 1022 1023 1024 1025 1030 1026 1027 1028 1068 1029 1031 1043 1032 1033 1034 1035 1036
APACITORS	1002 1003 1000 1001 1004 1005 1006 1007 1008 1009
ISC.	D1001 D1002 S1001 D1003 D1004 TR1000 TR1001 S1002 TR1002 TR1000 S1004a D1005 D1006 TR1003 S1002 TR1004 D1007 D1008 TR1005 S1001

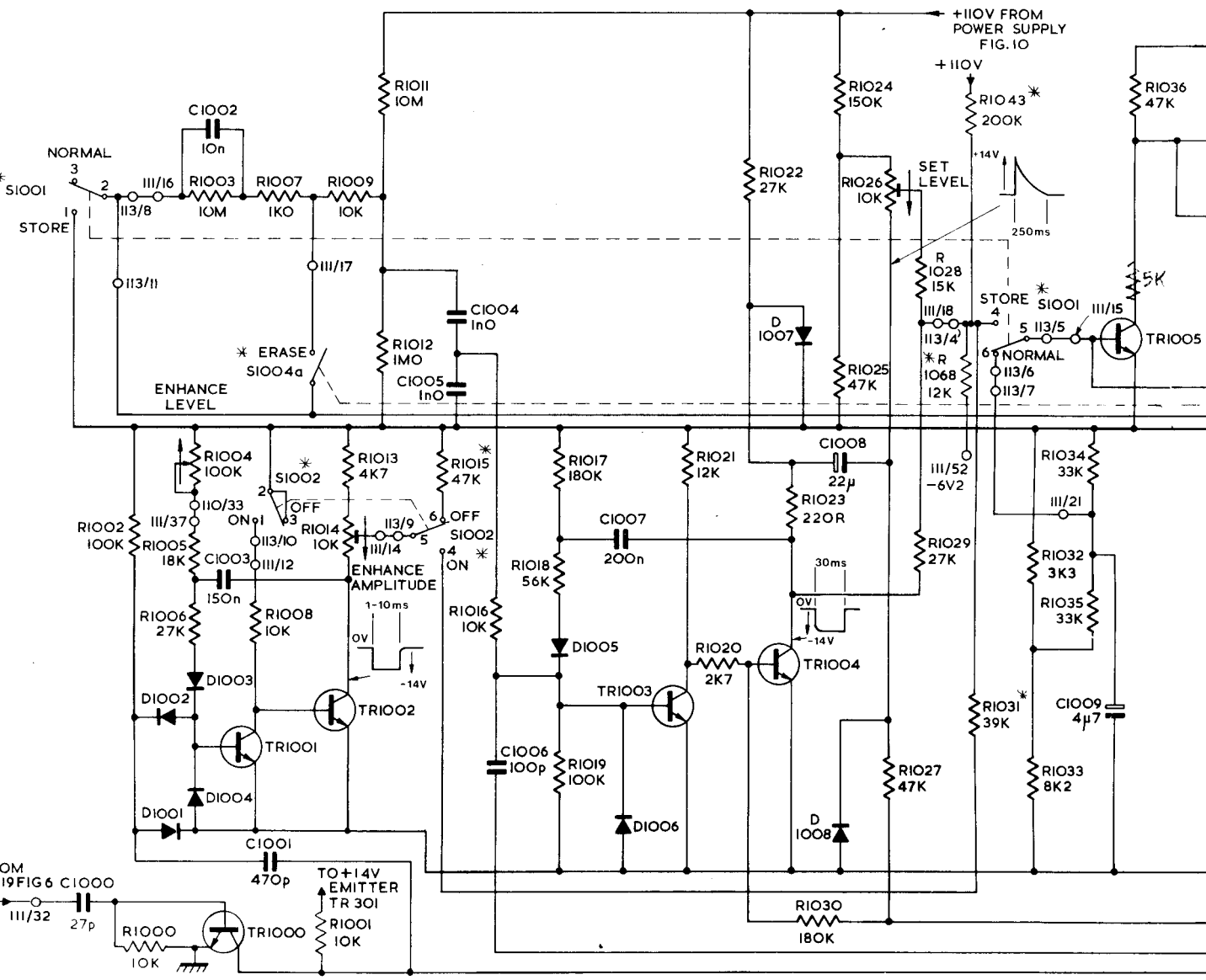

NOTES 1. ✱ DENOTES COMPONENTS NOT MOUNTED ON P.C.III BOARD.
2. 111/17 DENOTES P.C. BOARD/EYELET OR TERMINAL No.
3. ALL MEASUREMENTS ARE APPROXIMATE.

STORAGE CIRCUIT
FIG. 9

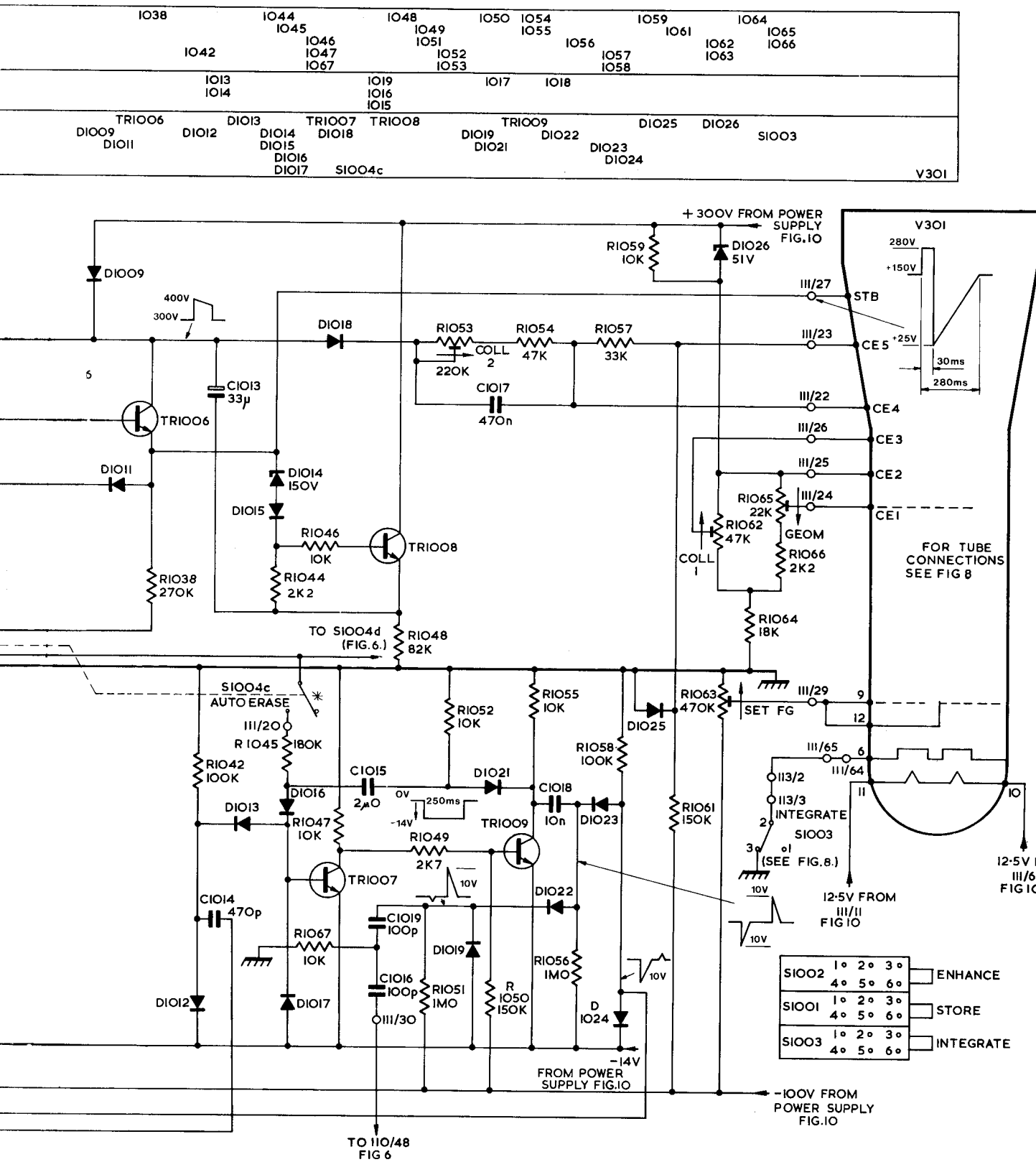
1038
1044
1045
1046
1047
1067
1048
1049
1051
1052
1053
1050
1054
1055
1056
1057
1058
1059
1061
1062
1063
1064
1065
1066
1042
1013
1014
1019
1016
1015
1017
1018
TR1006
TR1007
TR1008
TR1009
D1009
D1011
D1012
D1013
D1014
D1015
D1016
D1017
D1018
D1019
D1021
D1022
D1023
D1024
D1025
D1026
S1003
S1004c
V301
+300V FROM POWER SUPPLY FIG.10
R1059 10K
D1026 51V
V301
280V
+150V
+25V
30ms
280ms
111/27
STB
111/23
CE5
111/22
CE4
111/26
CE3
111/25
CE2
111/24
CE1
FOR TUBE CONNECTIONS SEE FIG 8
400V
300V
R1053 220K
COLL 2
R1054 47K
R1057 33K
C1017 470n
C1013 33μ
R1065 22K
R1062 47K
GEOM
R1066 2K2
COLL 1
R1064 18K
R1046 10K
R1044 2K2
R1038 270K
R1048 82K
TO S1004d (FIG.6.)
S1004c AUTO ERASE
111/20
R1045 180K
R1042 100K
R1052 10K
R1055 10K
D1025
R1063 470K
SET FG
111/29
9
12
R1058 100K
111/65
6
111/64
113/2
113/3
INTEGRATE
S1003 (SEE FIG.8.)
11
10
12·5V FROM 111/11 FIG 10
12·5V FROM 111/6 FIG 10
C1015 2μ0
D1021
C1018 10n
D1023
R1061 150K
D1016
D1013
R1047 10K
R1049 2K7
TR1009
TR1007
0V
250ms
-14V
10V
C1014 470p
C1019 100p
D1022
R1067 10K
D1019
R1056 1M0
C1016 100p
R1051 1M0
R 1050 150K
D 1024
111/30
D1012
D1017
S1002
S1001
S1003
1 2 3
4 5 6
ENHANCE
STORE
INTEGRATE
-14V FROM POWER SUPPLY FIG.10
-100V FROM POWER SUPPLY FIG.10
TO 110/48 FIG 6

RESISTORS				400			406 405			412
CAPACITORS				403		405 404		411 408 409	406 407	412
MISC	PL401 FS401 S401	T401	D406 D421 D422 D423	LP401	D408 D419 D407 D417	D412 D413 D402 D403	D411 D409 D404 D405	D401 D418 LP402		LP403

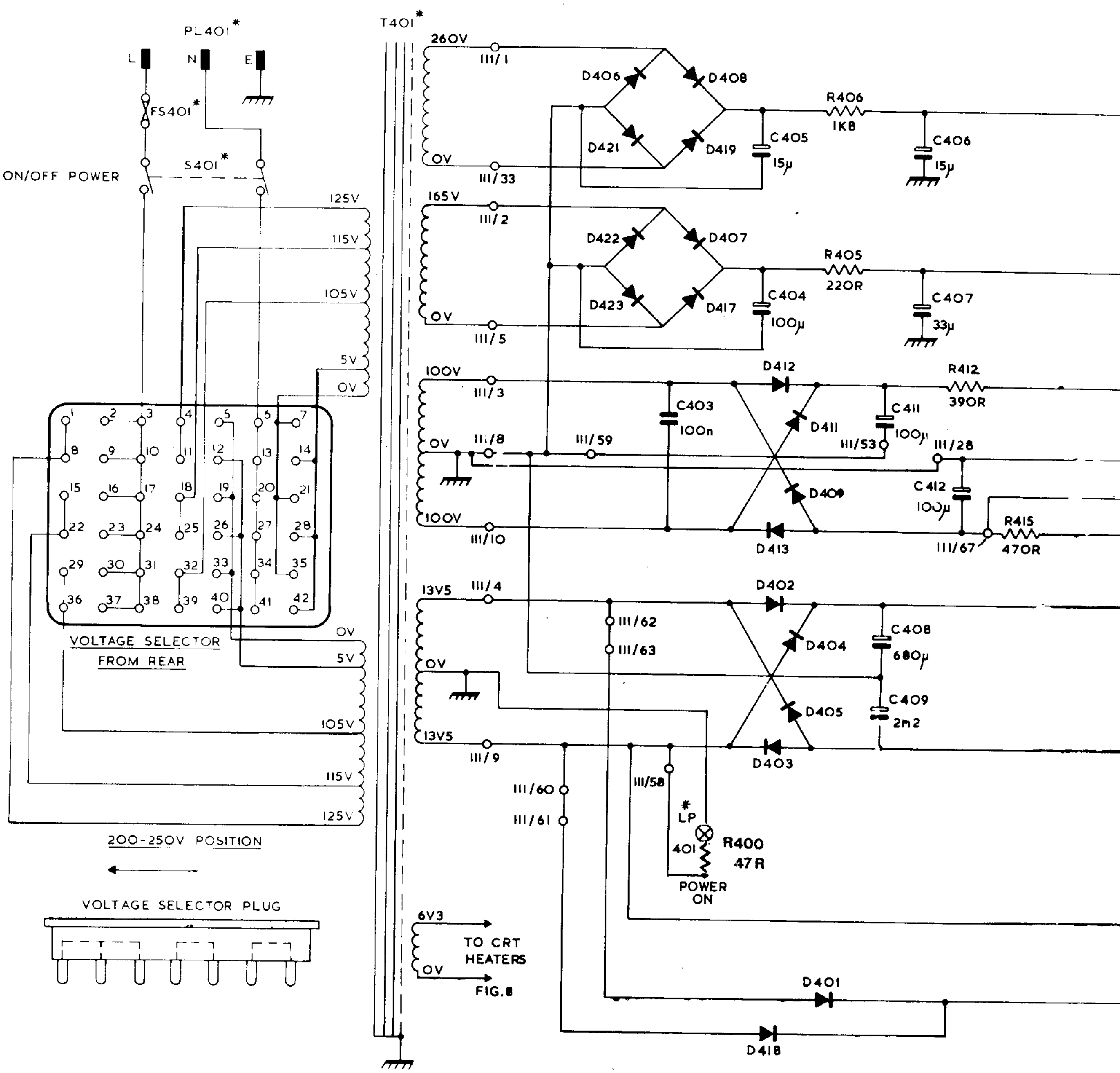

NOTES:

1. * DENOTES COMPONENTS NOT MOUNTED ON PC BOARD

2. III/9 DENOTES PC BOARD / EYELET OR TERMINAL No.

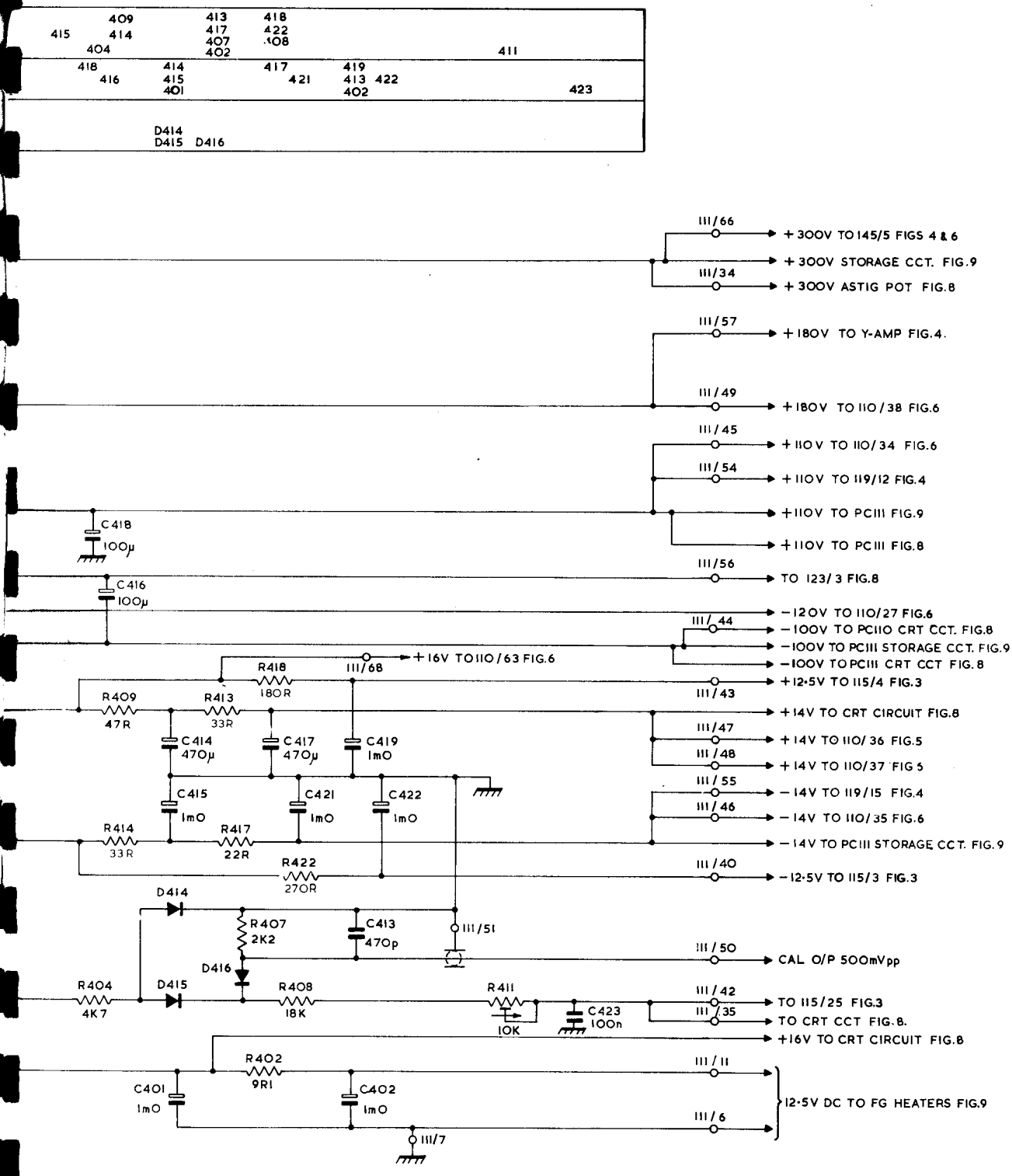

POWER SUPPLY FIG. 10

Ref. Figure 5

Ref. Figure 8

PC.110

Ref. Figure 6

Ref Figure 4

Ref Figure 3

PC 115

Figure 11
COMPONENT
REFERENCE

Ref Figure 2

A B C D E F G H I J

Ref. Figure 10

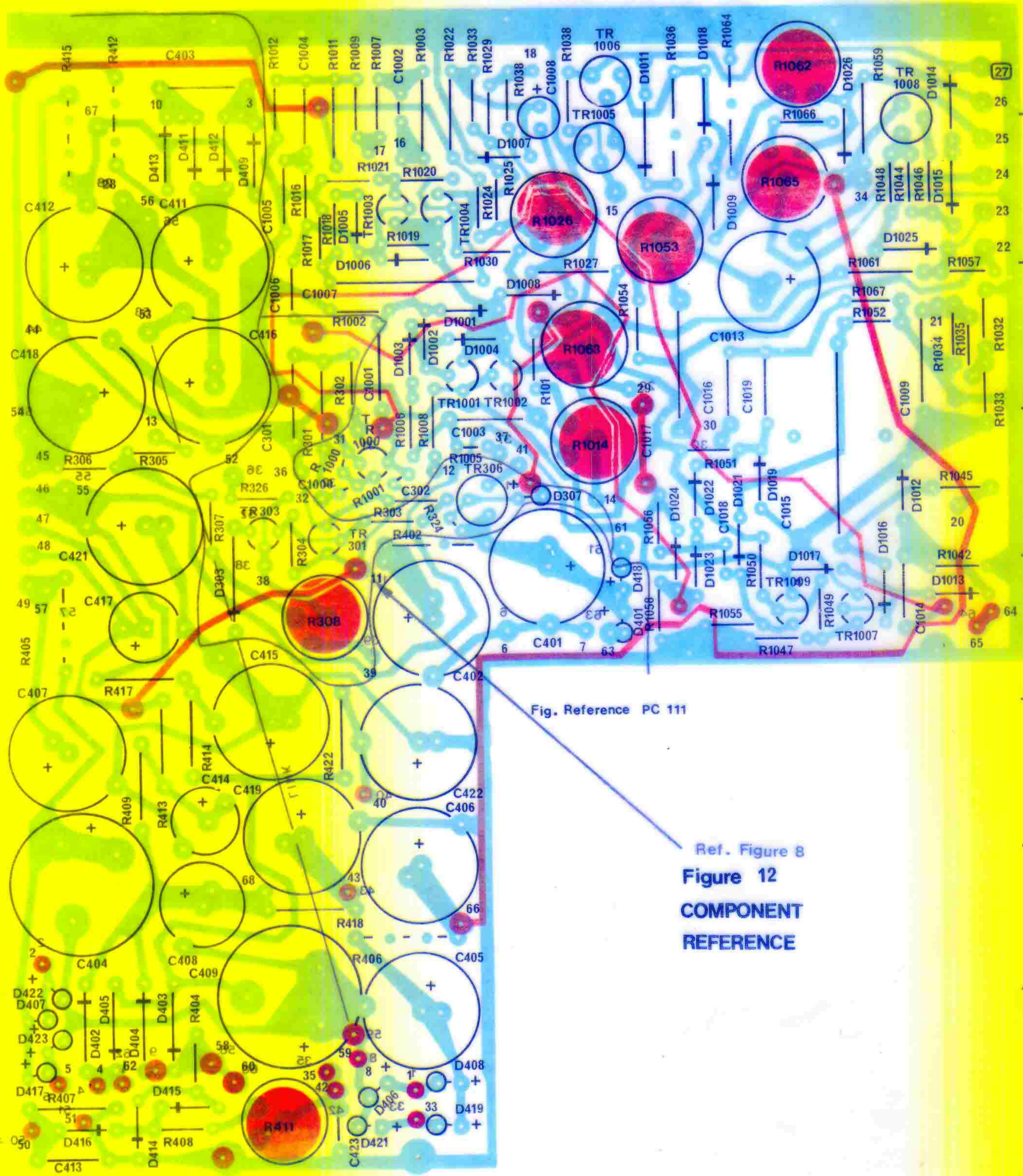

Figure 12

COMPONENT REFERENCE