ADJUSTMENTS

1. With the Cassette Holder in the load (up) position, ensure that the Pinch Roller Assembly Stop (next to Play/Record Head) is perpendicular to the Head Panel.
2. With the Play Key pressed down, ensure that the clearance between the Stop and the Pinch Roller Arm is 1.5 to 2.0mm. If necessary adjust the gap by carefully bending the lug on the Head Panel which is in contact with the Play Key (this is near the flywheel). See Diag. 6
3. With the Play Key pressed down, ensure that the clearance between the Brake shoes and the Pulleys are equal, and 1.5 to 2.00 mm. If necessary adjust the clearances by carefully bending the two lugs on the Brake Release Plate which are in contact with the Brake.
N.B. Do not twist the lugs in such a way that the inside edges bear against the Brake Release Plate.
4. Check that the Micro Switches operate correctly with the action of the Brake Release Plate. If necessary, adjust by bending the actuating leaf on the Micro Switch.

Diag. 6.

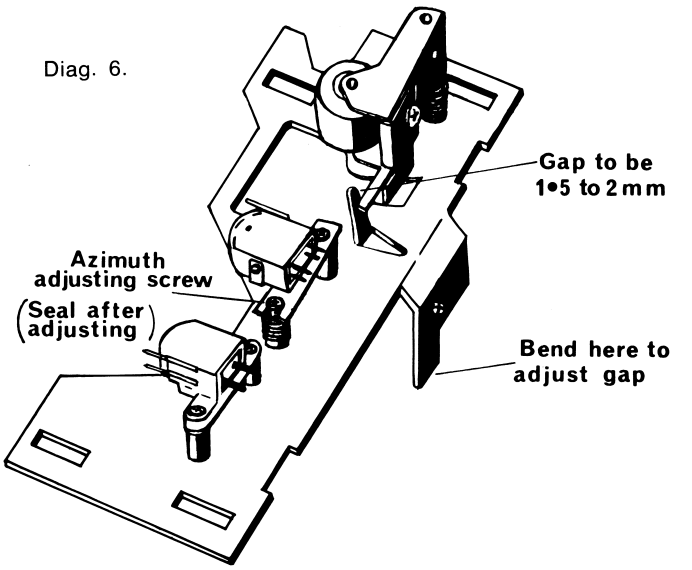

AZIMUTH ADJUSTMENT

This adjustment should be carried out using a suitable test cassette (e.g. Philips Test cassette TC-S giving a specified 6.3KHz output signal).

Connect a milli-voltmeter or c.r.o. to the right hand tape pre-amp output (or other convenient point at which to measure the output. If this is in the power amplifier, it will be necessary to ensure that the Balance control is centred and the Treble control at maximum).

Adjust the Azimuth Adjusting Screw (15) to give maximum output as read on the meter, and note the reading.

Connect the meter to the left hand tape pre-amp output and note the reading. If the two readings differ it may be necessary to adjust the Azimuth Screw for best compromise (monitoring both outputs simultaneously with identical meters or a double beam c.r.o. is convenient for this purpose).

The readings should be substantially similar. If not the fault may lie either in the head or the amplifier. It should be noted that the lower the number of stages between the head and the meter, the lower is the chance of error due to the amplifier.

PINCH ROLLER TENSION

The tension on the end of the striker arm at the limit stop should be 150-250 gms.

To measure, connect a spring balance as shown.

Diag. 7.

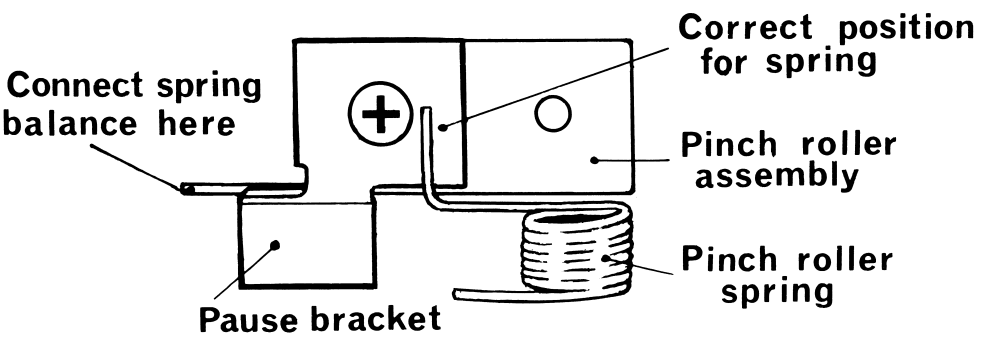

Ensure that the end of the Pinch Roller Spring (17) is behind the Pause Bracket (20).

To correct the tension, fit a new Pinch Roller Spring (17). In an emergency it is possible to re-tension the spring by suitably bending it.

Check that the Pinch Roller "tread" surface is slightly cambered, and therefore the centre of the "tread" should contact the Drive Shaft before the edges. To correct, fit a new Pinch Roller Assembly (21) if necessary and re-check. It may be required to bend the Pinch Roller Pivot shaft.

Re-check the Pinch Roller Tension.