END-of-TAPE STOP

The Rotary Magnetic Switch (152) is driven by the Counter Drive Belt (55) so that whenever the tape is moving (in either direction) the switch will be operating. The rotary switch consists of a circular ferrite magnet fastened to the shaft. As this magnet rotates the induced magnetism in an adjacent iron piece on a spring leaf causes contacts to open and close. Any slight reaction from the contacts opening and closing is reduced by the flywheel action due to the shape of the magnet.

The switch closes twice per revolution, and is connected so as to generate a train of square pulses (see Circuit Diagram).

The pulses are rectified by D206. Since the time constant of C211, R213 is long compared with the switching period, C211 will charge so that the base of TR216 will be positive, causing TR216 to conduct to saturation.

This will cause TR217 to be biassed off, and no base current will be supplied to TR218, so that no current will flow in TR218 collector circuit (i.e. the solenoid L206).

(N.B. The End-of-Tape Stop Disabling Switch SW208 is normally open, and is closed only when the Pause Key is depressed).

When the tape reaches the end of its travel the rotary switch will cease to be actuated, no pulses will be generated, and C211 will discharge via R213. The rate of discharge is such that after approximately 2.5 to 4 seconds TR216 will be biassed off. At this instant TR217 will be biassed into maximum conduction, causing TR218 to be turned hard on. This actuates the solenoid L206, pulling the core in and the Trip Lever (149) releases the latch bar on the Push Button assembly (4).

Diag. 4.

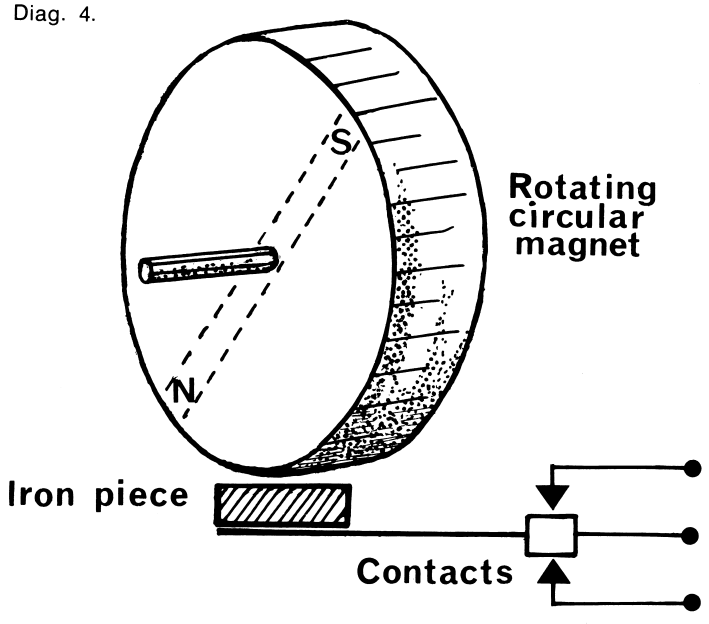

Thus any key which is down (with the exception of the Pause Key) will be released, causing the Motor Switch (129) and the Tape Movement Switch (151) to be opened and the Brake (44) to be applied (see under Stop Action).

The above action will occur whenever tape movement ceases (e.g. end of travel, broken tape). In order that the End-of-Tape Stop should not operate when the Pause Key is depressed, a separate micro-switch, SW208 is provided.

This is closed when the Pause Key is depressed, so causing TR217, and consequently TR218, to be biassed off whatever the condition of TR216.

NOTE: The Pause Key should not be depressed during Fast Forward or Rewind modes, as this will render the End-of-Tape Stop inoperative.

END-OF-TAPE STOP
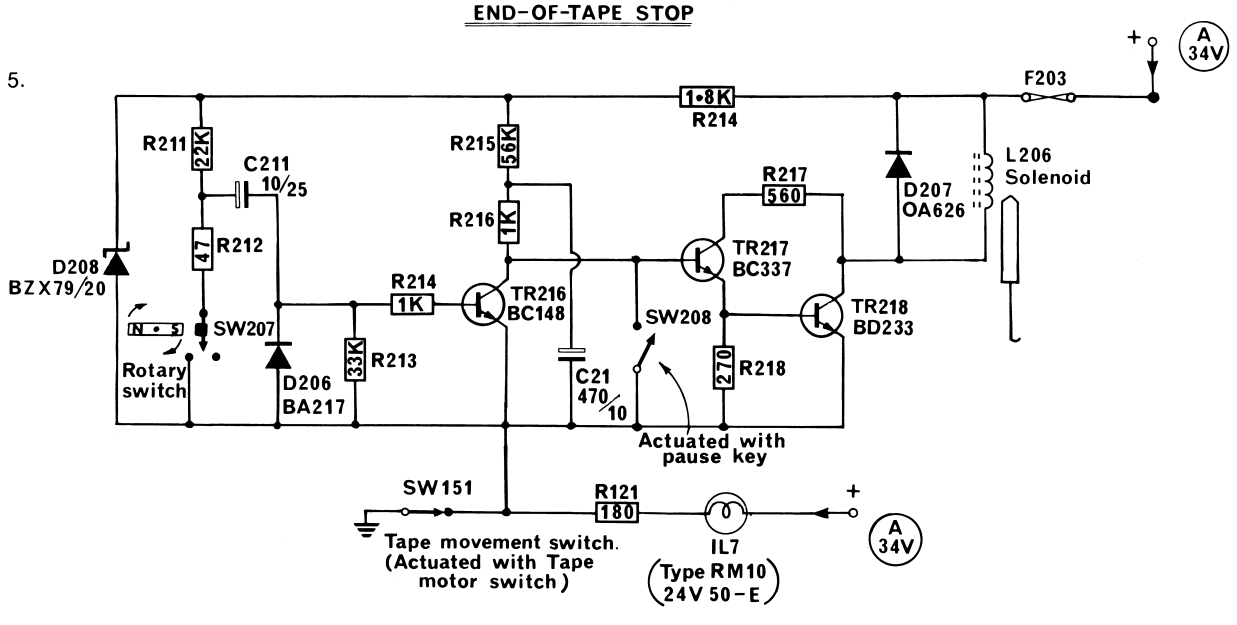
Diag. 5.