J. DAVIS
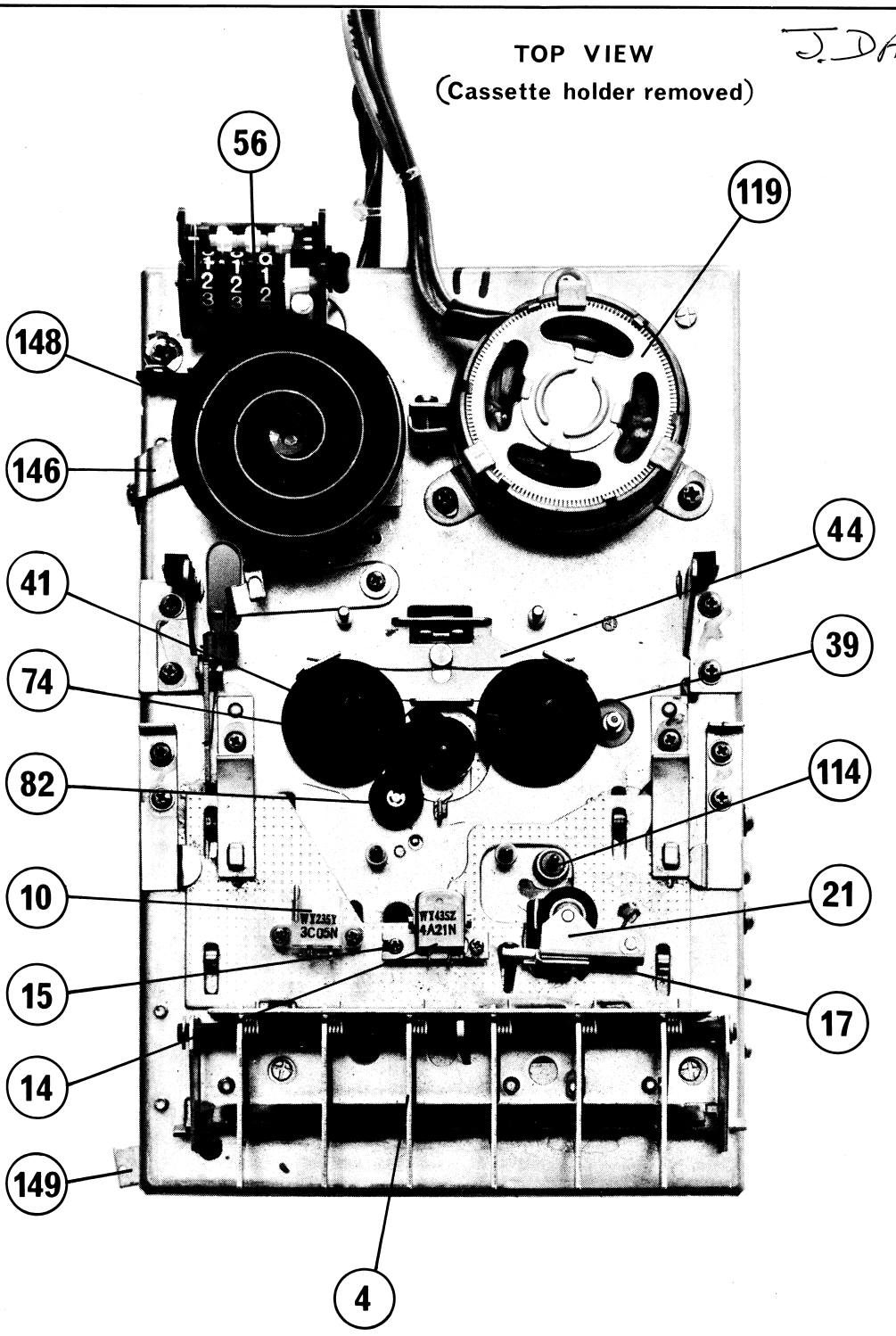
TOP VIEW
(Cassette holder removed)