TOP VIEW – TAPE DECK

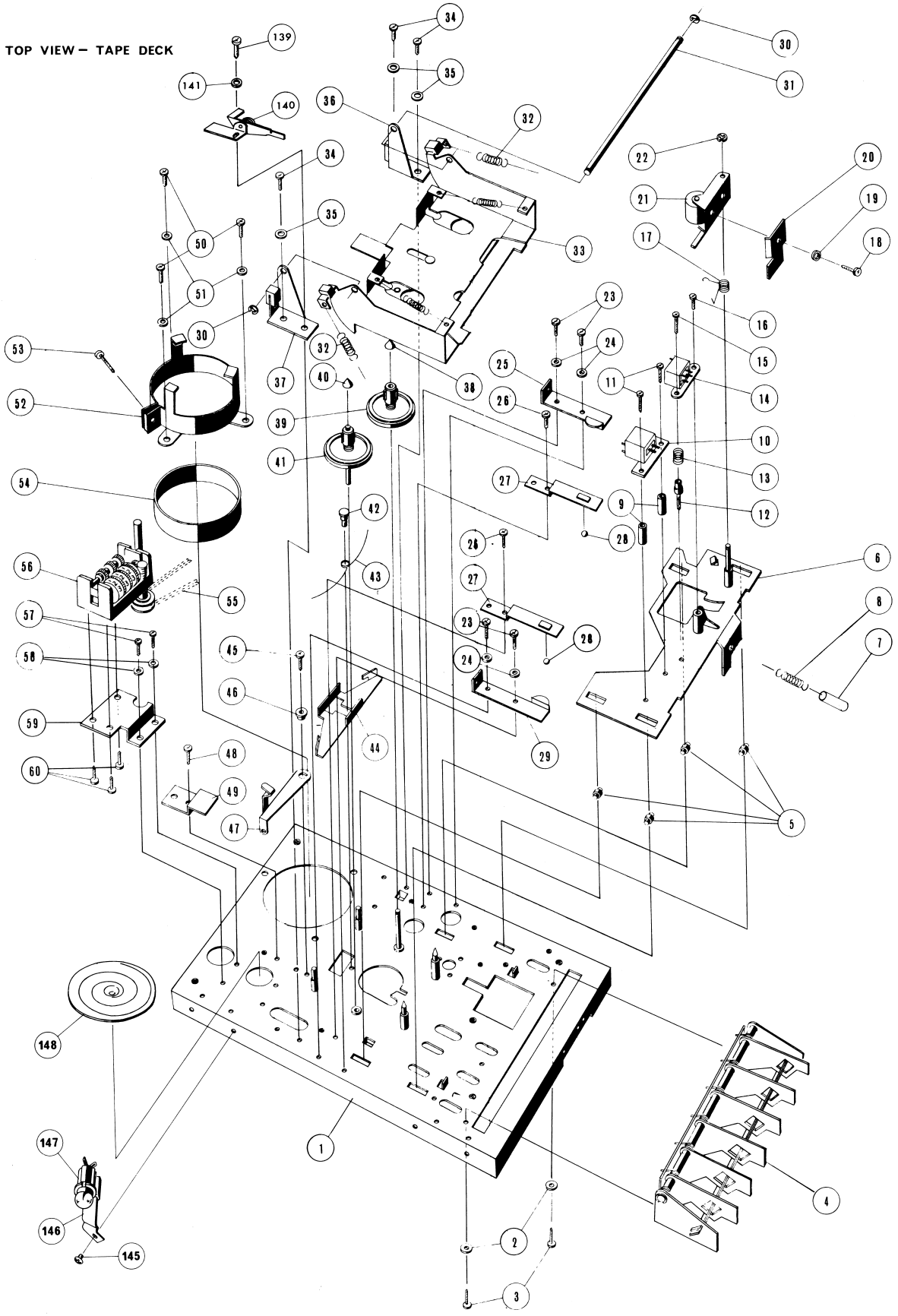
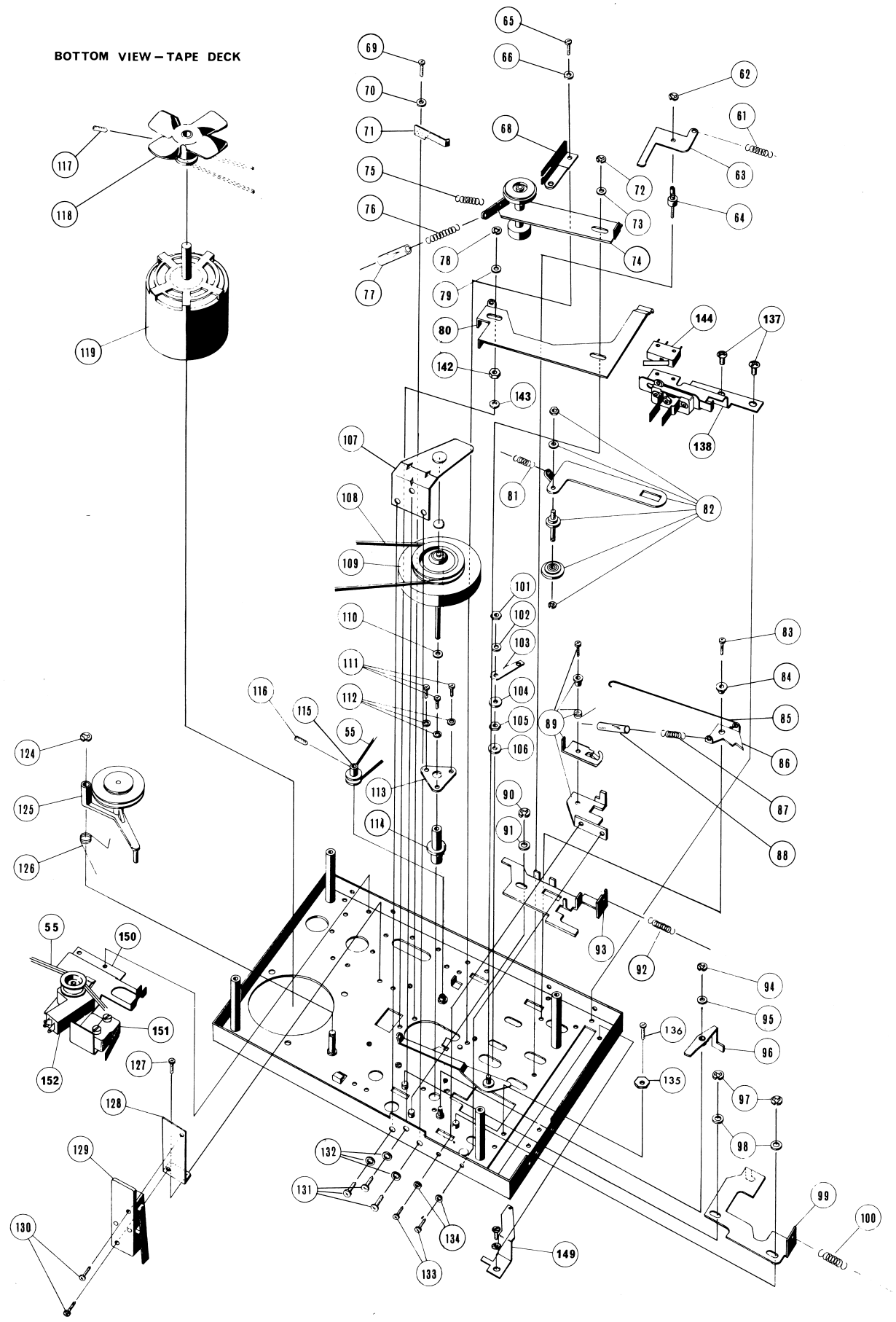
BOTTOM VIEW – TAPE DECK