SANYO

Compactly Designed Stereo Radio-phonograph

MODEL DC-900A(S) SERVICE MANUAL

SANYO ELECTRIC CO., LTD.
INTERNATIONAL DIVISION: SANYO ELECTRIC TRADING CO., LTD.
OSAKA, JAPAN

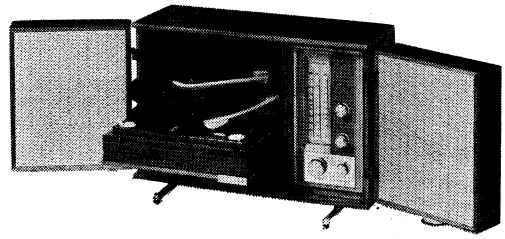

Model DC-900A with automatic record changer

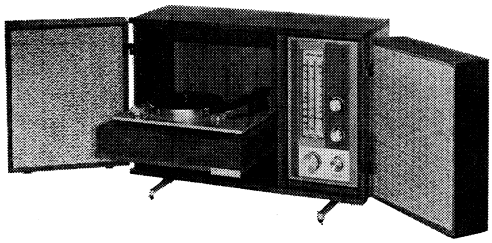

Model DC-900S

SPECIFICATIONS

TUBES ····· 12BE6×1 Frequency Converter & Oscillator
12BA6×1 IF Amplifier (455 Kc)
6AU6×2 AF Amplifier
30A5×2 Power Amplifier

DIODE ····· 1S188×1 Detector

SILICON ····· 1S559×1 Rectifier

FREQUENCY RANGES ····· MW 535—1,605 Kc
SW1 2.5—7.3 Mc
SW2 8.0—22.0 Mc

INTERMEDIATE FREQUENCY ··· 455 Kc

SENSITIVITY ····· MW SW1 SW2 50μV (at 50 mW)

POWER OUTPUT ····· Maximum 3W+3W (Totalling 6W)
Undistorted 2W+2W (Totalling 4W)

CROSSTALK ····· 40 db. (at 1 Kc)

LOUDNESS CONTROL ····· 100c/s+60db. 10Kc/s+6db

SPEAKERS ····· 6½″×2 Permanent Dynamic Speaker

PLAYER ····· 4 Speed Auto-Changer (Model DC-900A)
4 Speed (DC-900S)

MOTOR ····· TP-8 Type Induction Motor

TURNTABLE ····· 9″ Diameter

PICK-UP ····· Ceramic Type Stereo Cartridge with Sapphire Stylus (Type ST-3)

OUTPUT ····· 0.3V 50mm/1Kc/sec

CONTINUOUS PLAYING TIME ··· 4 hours

STYLUS PRESSURE ····· 7 gr (0.035 ozs)

POWER SOURCE ····· AC 100V ····· 100V
110V ····· 110V
117V ····· 117V
200V-220V ··· 210V
230V-240V ··· 235V
} 2 Kinds
50 or 60 c/s

POWER CONSUMPTION ····· 75VA 43W/50 c/s (No signal)

DIMENSIONS ····· 600 wide×293 deep×420 high (mm)
(24″ wide×12″deep×17″high)

WEIGHT ····· 16.5 kg (35½ lbs)

IF ADJUSTMENT

STEP	Adjusting circuit	Power Input		Position of Tuning Dial	Adjustment	V.T.V.M.
		Connections	Frequency			
1	IF Circuit	Connect standard loop antenna to output terminals of SG.	455 Kc	VC max. or min.	U4-A, U4-B	Max.

PARTS LIST

Stock No.	Description	Q'ty
ELECTRIC		
	Tube 12BE6	1
	Tube 12BA6	1
	Tube 6AU6	2
	Tube 30A5	2
	Diode 1S188	1
	Silicon 1S559	1
GS-W6016	O. P. T.	2
GS-W7025	Power transformer 117V, 210V, 235V	1
GS-W7026	Power transformer 100V, 110V	1
GS-S8313	Antenna coil assembly, 2-band	1
GS-W2020	MW antenna coil	1
GS-W3013	MW oscillator coil	1
GS-W3014	SW1 oscillator coil	1
GS-W3015	SW2 oscillator coil	1
GS-C0004	2 Motions trimmer	1
GS-C0001	4 Motions trimmer	1
GS-C1002	2 Motions variable condenser SY-220	1
GS-S4032	Rotary SW. 2-6-4	1
GS-S4033	Rotary SW, 2-2-4	1
GS-R1047	Variable resistor, 1M ohm×2B	1
GS-C9004A	Electrolytic capacitor 100μF+100μF +50μF 150WV	1
GS-W5U001	I.F.T. U4A	1
GS-W5U002	I.F.T. U4B	1
	Fuse 1.5A	1
GS-S1007A	2 Motion PU socket	1
GS-S1011	2P socket mold	1
GS-S2004	M.T. socket, with center pin	4
GS-S2005	M.T. socket, without center pin	2
GS-S3064	1-1PL lug board	1
GS-S3008	1-3PL lug board	1
GS-S3007	1-4P lug board	2
GS-S2017	Recorder jack	1
GS-S3068	Speaker lead assembly	2
GS-S6053	Speaker 6"	2
GS-S3048	Power cord	1
GS-CR001	C.R. packed 50K ohm, 120pF 120pF	1
GS-CR002	C.R. packed 5Kohm 50.00μF	2
GS-S8101	P.L. (A) assembly	1
GS-S1006	P.L. lamp. 6.3V 0.2A	1
GS-S2020	Jack assembly	2
GS-S3028	1-6P lug board	1

Description				Q'ty
RESISTOR				
Carbon	5 ohm	±10%	R31	1
Carbon R type	20 〃	〃	R17, 29	2
Carbon	100 〃	〃	R32	1
〃	150 〃	〃	R15, 27	2
〃	300 〃	〃	R33	1
〃	1K 〃	〃	R34	1
RESISTOR				
Mould	20K ohm	±20%	R2	1
〃	60 〃	〃	R2	1
〃	150 〃	〃	R10, 22, 3	3
〃	1.5K 〃	〃	R9, 21	2
〃	5K 〃	〃	R18, 30	2
〃	50K 〃	〃	R7, 13, 19, 25	4
〃	250K 〃	〃	R6, 12, 23	3
〃	2M 〃	〃	R4	1
〃	500K 〃	〃	R8, 14, 20, 27	4
〃	1M 〃	〃	R11, 23	2
CONDENSER				
Paper, tubular	0.001μF	±20% 400WV	C14	1
〃	0.01μF	〃 〃	C17, 20, 28, 31	4
〃	0.0μF	〃 〃	C4, 6, 11, 25 36, 39	6
Electrolytic, tubular	3μF	−10+100% 150WV	C19, 30	2
〃	20μF	〃 〃	C43	1
〃	30μF	〃 6WV	C18, 29	2
〃	25μF	〃 25WV	C23, 34	2
Titanium, tubular	5pF	±0.25pF 500WV	C10	1
〃	100pF	±10% 250WV	C5	1
〃	150pF	〃 〃	C15, 26	2
〃	460pF	±5% 〃	C5	1
Titanium, disk	10pF	±10% 250WV	C1	1
〃	500pF	±20% 500WV	C37, 38	2
(with use of P.T GS-W7025)				
Styrol, tubular	1800pF	±10% 250WV	C8	1
〃	6500pF	〃 〃	C7	1
M. P. tubular	0.5μF	±20% 150WV	C22, 33	2
〃	0.5μF	〃 〃	C44	1
(with use of P.T GS-W7025)				4
Mylar, vertical	0.005μF	±20% 50WV	C16, 21, 26, 32	
Titanium, tubular	100pF	±10% 250WV	C45, 46	2
Paper, tubular	0.005μF	±20% 400WV	C2, 3	2
(Below capacitor required only when using DJ GS-W7026)				

6-20088 Printed in Japan

RF ADJUSTMENT

Band Select Switch	Step	Adjusting circuit	Power Input		Position of Tuning Dial	Adjustment	V.T.V.M.	
			Connection	Frequency				
MW	1	Frequency Converter Circuit (Adjust repeatedly)	Connect Standard loop antenna to output terminals of SG.	600 Kc	23.4 m/m from cardinal point on dial scale	L_3, L_6	Max.	Chack whether 535 Kc–1605Kc frequency ranges are fully covered or not ; if not repeat adjusting.
	2			1400 Kc	106.9 m/m from cardinal point on dial scale	TC_3, TC_6	Max.	
SW1	1			3 Mc	41.9 Mc from cardinal point on dial scale	L_2, L_5	Max.	Check whether 2.5 Mc–7.3 Mc frequency ranges are fully covered or not ; if not, repeat adjusting.
	2			7 Mc	120.9 Mc from cardinal point on dial scale	TC_2, TC_5	Max.	
SW2	1			9 Mc	23.6 m/m from cardinal point on dial scale	L_1, L_4	Max.	Check whether 8 Mc–22 Mc frequency ranges are fully covered or not ; if not, repeat adjusting.
	2			21 Mc	110.6 m/m from cardinal point on dial scale	TC_1, TC_4	Max.	

MAIN PARTS CONNECTION

POWER TRANSFORMER GS-W7026

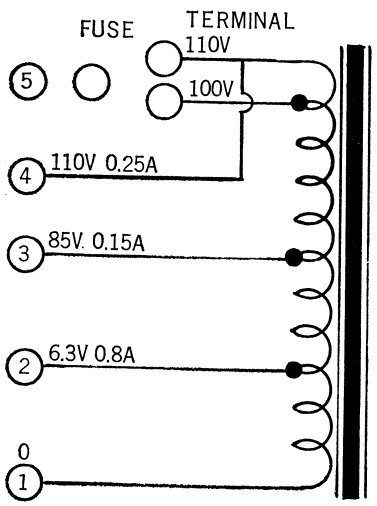

POWER TRANSFORMER GS-W7025

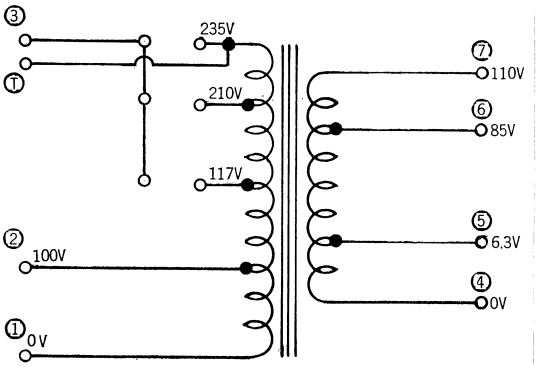

OUTPUT POWER GS-W6016

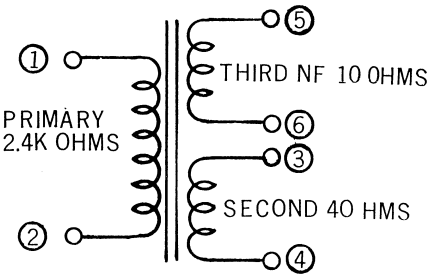

PARTS LIST

Stock No.	Description	Q'ty
CABINET		
GS-46154	Cabinet	1
GS-S8300	Dial plate assembly	1
GS-38018	-Dial plate	1
GS-31021	-Dial plate frame	1
GS-26117	-Dial plate decoration	1
GS-S8273	Knob W1 assembly	1
GS-33067	-Knob W1	1
GS-26107	-Knob decoration W1	1
GS-S8274	Knob W2 assembly	1
GS-33068	-Knob W2	1
GS-26108	-Knob decoration W2	1
GS-S8275	Knob T assembly	1
GS-33069	-Knob T	1
GS-26109	-Knob decoration T	1
GS-S8276	Knob Z assembly	2
GS-33070	-Knob Z	2
GS-26110	-Knob decoration Z	2
GS-43025	Knob felt T	1
GS-43013	Knob felt A	2
GS-43018	Knob felt D	1
GS-42333	Back board	1
GS-11188	Back board fixing metal	5
GS-S8062	Back board fixing screw assembly	5
GS-36057	Lead wire cover (A)	1
GS-36058	Lead wire cover (B)	2
GS-S8334	Hinge A assembly	1
GS-11595	-Hinge metal (A)	1
GS-15139	-Hinge shaft (A)	1
GS-23058	Badge	1
GS-S8301	Leg assembly	2
GS-28009	-Leg	2
GS-35023	-Polyethylene leg	2
GS-23059	Handle	1
GS-11617	Stopper	1
GS-S8302	Ball stopper assembly	2
	-Ball	2
	-Case	2
	-Spring	2
	-Bottom lid	2
GS-11596	Special board nut	1
GS-11597	Special washer (A)	3
GS-11598	Special washer (B)	1
GS-46161	Player stand	1
GS-24250	Sleeve	2
GS-15140	Shaft	1
GS-46162	SP box (right)	1
GS-46163	SP box (left)	1
GS-46164	Baffle board (A)	2
GS-46165	Baffle board (B)	2
GS-11604	Mounting metal, baffle board	4
GS-23055	Pushing spring, baffle board	4
GS-S8305	Box leg assembly	4
GS-11605	-Box leg	4
GS-44046	-Rubber leg	8
GS-23056	Stopper metal	2

Stock No.	Description	Q'ty
CABINET		
GS-11606	Hinge metal (C)	2
GS-11607	Hinge metal (D)	2
	Net (A)	2
	Net (B)	2
GS-23032	Badge (A)	1
GS-S8351	Hinge assembly (B)	1
GS-11638	-Hinge metal (A)	1
GS-15145	-Hinge shaft (B)	1
GS-S8336	Hinge assembly (C)	1
GS-11629	-Hinge metal (B)	1
GS-15139	-Hinge shaft (A)	1
GS-S8337	Hinge assembly (D)	1
GS-11629	-Hinge metal (B)	1
GS-15145	-Hinge shaft (B)	1
GS-11681	Stopper	1
GS-11682	Reinforcement metal, corner	2
GS-11519	Reinforcement angle	1
GS-S8350	Hinge assembly (A)	1
GS-11683	Hinge metal (B)	1
GS-15139	Hinge shaft (A)	1
GS-23058	Badge	1
GS-11684	Board washer	4
GS-S7003	Stud nut	8
CHASSIS		
GS-S8306	Chassis assembly	1
GS-11608	-Chassis	1
GS-11667	-Chassis leg (A)	1
GS-11668	-Chassis leg (B)	2
GS-11610	Piller (A)	1
GS-11611	Piller (B)	1
GS-11612	Slide rail	1
GS-S8307	Pointer assembly	1
GS-24251	-Pointer	1
GS-23057	-Pointer slide	1
GS-36059	Back plate	1
GS-S8308	Dial shaft assembly	1
GS-24252	-Dial shaft	1
GS-24043	-Shaft metal	1
GS-S8188	Rope spring	1
	Drums assembly	1
GS-11200	-Drum	1
GS-28001	-Drum shaft bearing	1
GS-31004	Cord stopper	1
GS-15017	Pushing spring, tube	2
GS-44009	VC rubber	3
	Trimmer base	4
	Rope	1
GS-35024	Pulley	4
GS-24007	Pulley shaft	4
GS-11666	Shield board	1
GS-11664	Antenna holder (A)	1
GS-11665	Antenna holder (B)	1
GS-11670	Shield board	1
GS-15144	Lead wire stopper	1

CHART OF PARTS POSITION

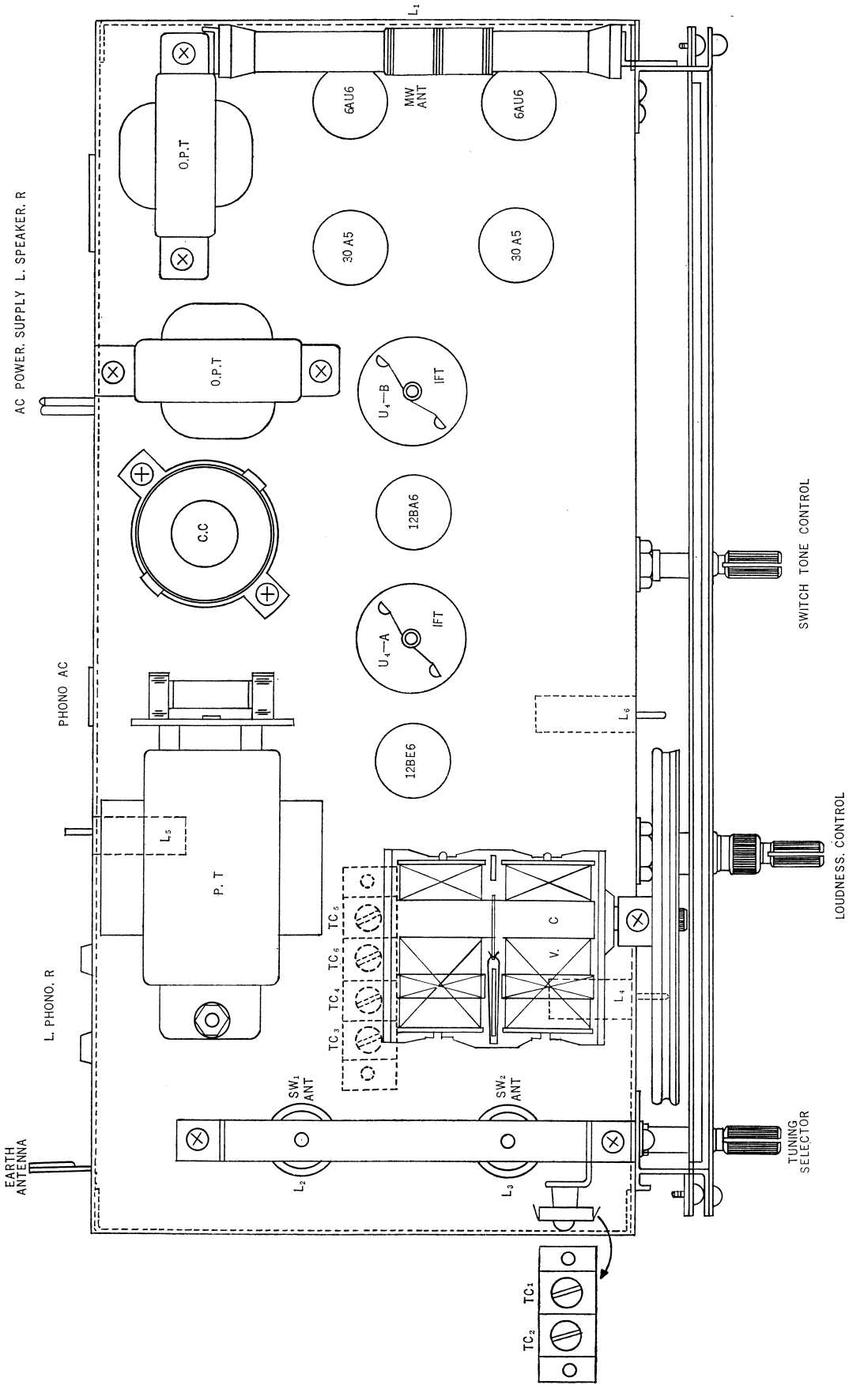

CIRCUIT DIAGRAM

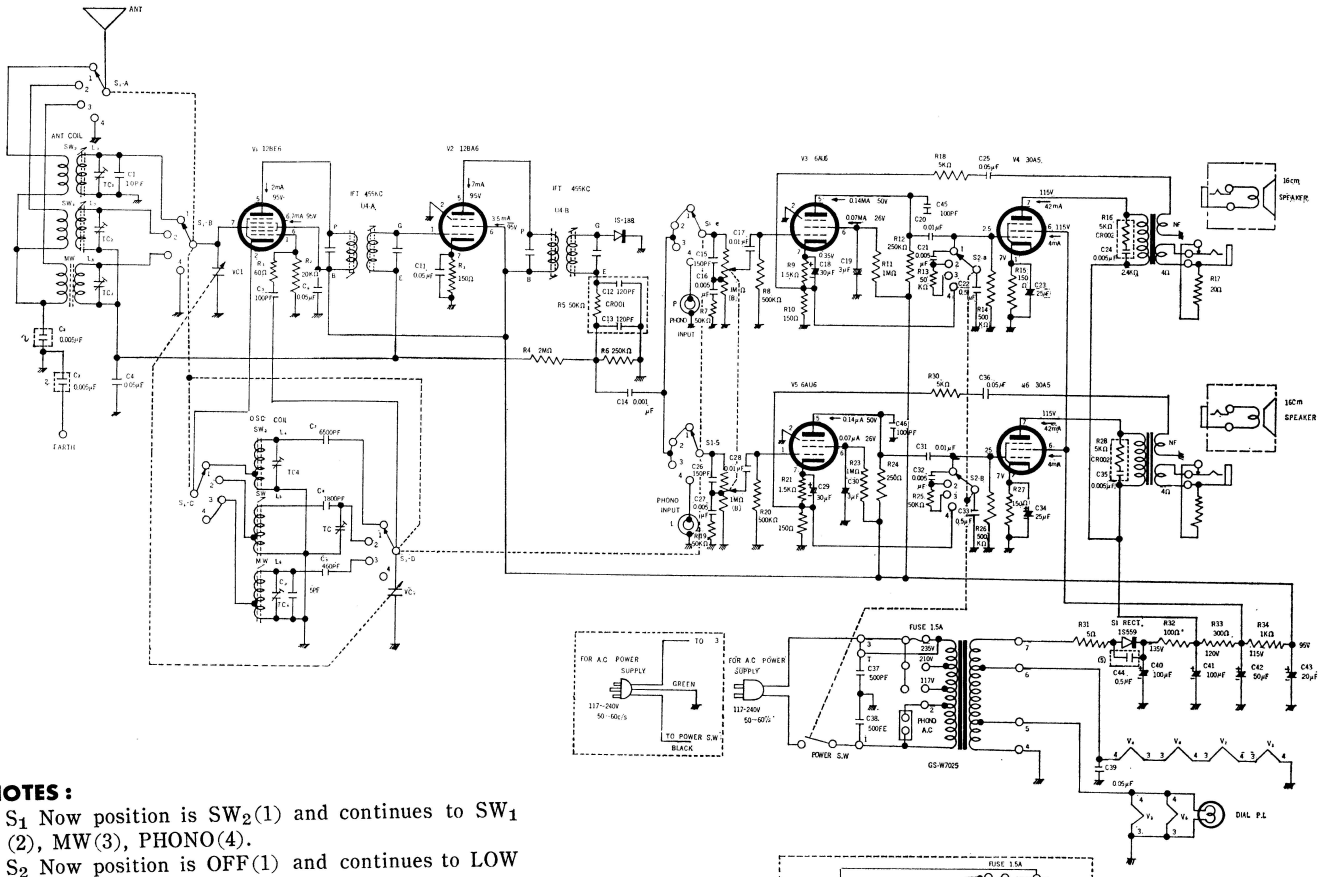

NOTES :

1 S_1 Now position is SW_2(1) and continues to SW_1 (2), MW(3), PHONO(4).

2 S_2 Now position is OFF(1) and continues to LOW (2), MEDIUM(3), HIGH(4).

3 Voltage and current figures note at MW.

4 ①~④ Capacitors are not used when power-transformer GS-W 7025 is used. (Earthed to chassis)

5 ⑤ Capacitor is not used when power-transformer GS-W 7026 is used.

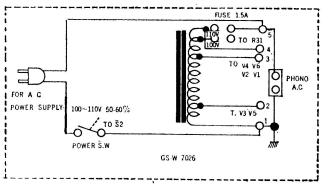
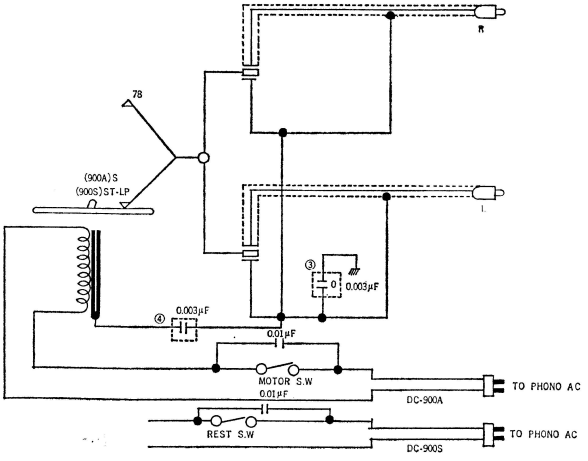
MODEL DC-900 PL CIRCUIT DIAGRAM