Auto-reverse cassette deck D6

Version D6-1

Service
Service
Service

Service Manual

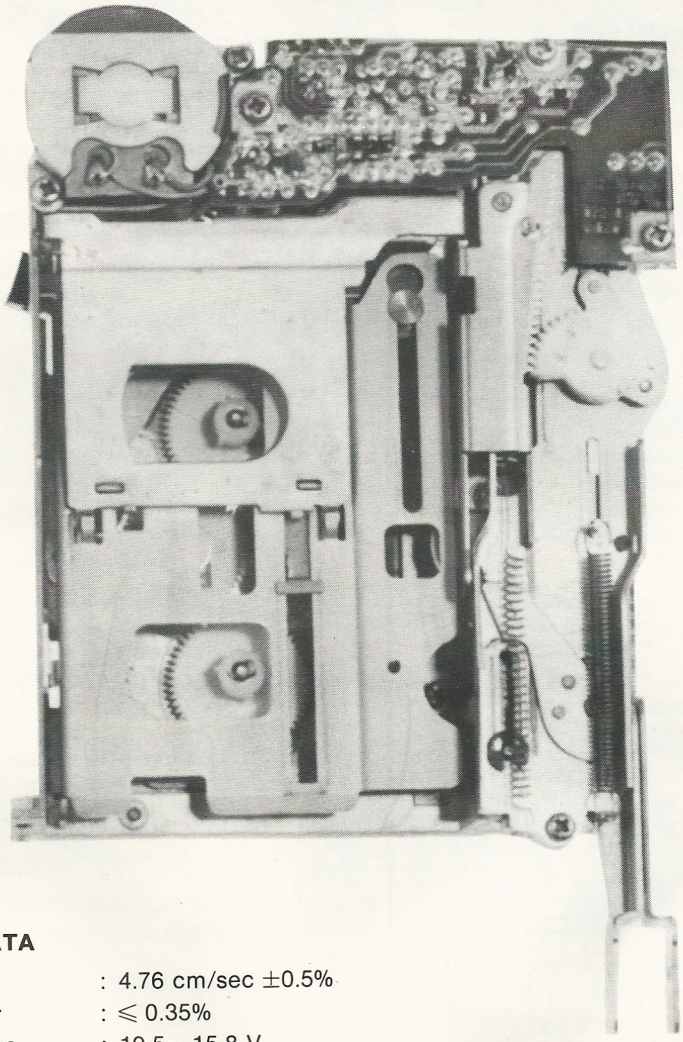

30875A12

TECHNICAL DATA

Tape speed	: 4.76 cm/sec ±0.5%
Wow and Flutter	: ⩽ 0.35%
Operating voltage	: 10.5~ 15.8 V
Fast winding time	: ⩽ 145 s (C60)
Number of tracks	: 2x2

Documentation Technique Service Dokumentation Documentazione di Servizio Huolte-Ohje Manual de Servicio Manual de Serviço

Subject to modification

GB 4822 725 15153

Printed in The Netherlands

CS 85 412GB

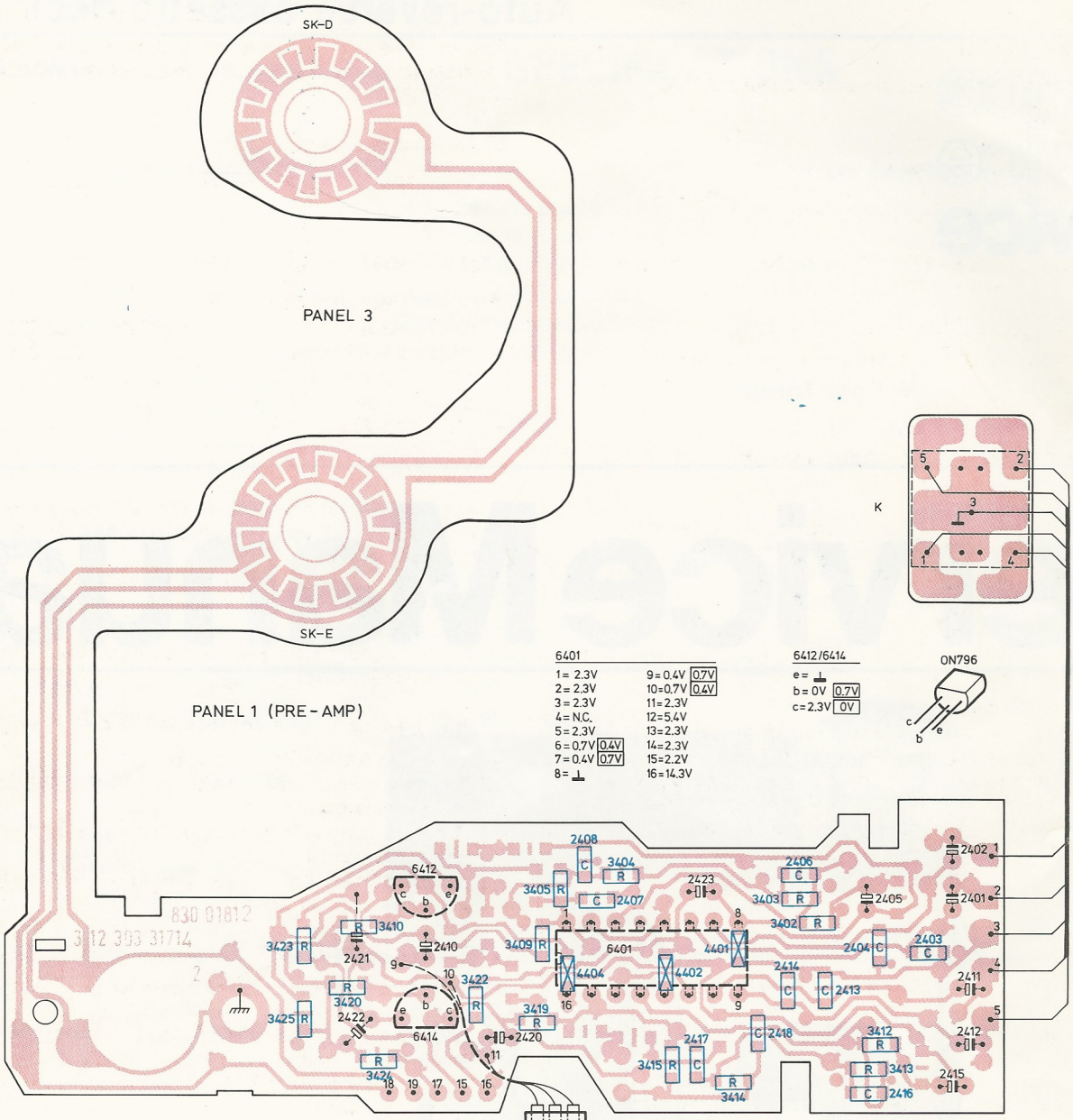

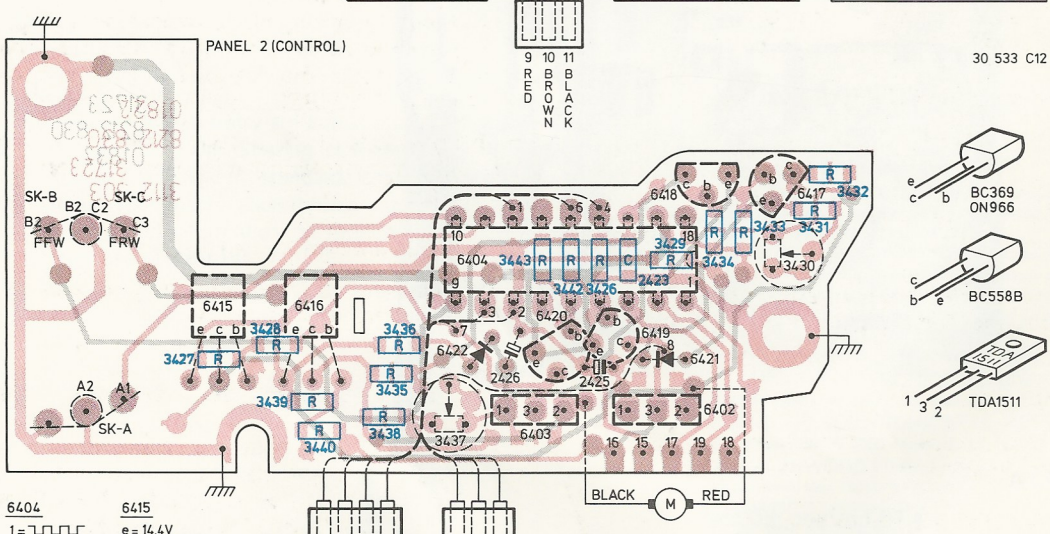

6404
1 = ⊓⊓⊓
2 = ⊓⊓⊓
3 = 0V
4 = 0.7V 0.2V
5 = 0.2V 0.7V
6 = N.C.
7 = 14.4V
8 = 0V
12 = 14.4V
13 = N.C.
14 = 14.1V
15 = 14.1V
16 = ⊓⊓⊓
17 = ⊥
18 = 14.4V 0V

6415
e = 14.4V
b = 14.4V 14.3V
c = 9.1V 14.4V

6416
e = 14.4V
b = 14.3V 14.4V
c = 14.4V 8.9V

6417
e = 10.4V 14.4V
b = 14.4V
c = 9.1V 14.4V

6418
e = 14.4V 10.1V
b = 14.4V
c = 14.4V 8.8V

6419
e = ⊥
b = 0.7V 0.1V
c = 0.1V 14.4V

6420
e = ⊥
b = 0.1V 0.7V
c = 14.4V 0.1V

1 YELLOW
2 GREY
3 RED
4 BROWN
6 RED
7 BROWN
8 BLACK

6402
1 = 10.3V 14.4V
2 = 9.1V 14.4V
3 = 0.1V 14.4V

6403
1 = 14.4V 10.1V
2 = 14.4V 8.9V
3 = 14.4V 0.1V

V ELECTRONIC VOLTMETER

...V PLAYBACK NORMAL
[...V] PLAYBACK REVERSE
[..V] FAST

30 532 C12

CS 85 394

SERVICING HINTS

1. Playback head 77 and pressure rollers 72, 78 (Figs. 2,3)

— Remove 4 screws 10.
— *Slightly loosen screw 13 (Fig. 5).*
— Now panel 2 can be slightly lifted. (If necessary, unsolder interconnections A (Fig. 5).
— Remove springs 94.
— Now push-button rod unit 93 and cassette holder mechanisms 501, 502 should be removed simultaneously.*
— Now the playback head can be replaced.
— In order to take out the pressure rollers springs 74 (Fig. 5) and clamping rings 1.9 mm (Fig. 3) should also be removed.
— Now the pressure rollers can be replaced.
— It is recommended to replace both pressure rollers simultaneously as well as springs 74.

NB Ensure that the following components are not overlooked during assembly:
springs 94, 91 and 74
bushes 71 and 522
clamping rings 1.9 mm

2. Flywheels 61 (Figs. 1, 3)

— Remove clamping ring 73.
— Now the flywheel can be taken out of the chassis.
— Upon replacement of the flywheel it is recommended also to replace both washers 58.

Note: When mounting the flywheel do not forget to apply a washer 58 both at the lower and at the upper side.

3. Cassette eject (Figs. 6, 4)

— If the cassette is not completely ejected, check the distance given in Fig. 6.
This distance can be changed by bending bracket 501 at the point marked * in Fig. 4.
The best way is by means of a special tool, drawn in Fig. 7.
— Bracket 502 might also become distorted during (dis)assembly. This can be checked by manually sliding a cassette to and fro in the bracket.
It should be easy to move the cassette.

4. Replacement of 6402, 6403

Unsolder connection A (Fig. 5).
Remove fixing screws of panel 2.
Loosen screw 13 *a few turns* to prevent item numbers 505 and 516 from getting loose (hard to mount).

*If this is not possible, make sure that bush 87 and spring 91 are mounted before the whole is secured definitely.

MAINTENANCE

It is recommended to clean the tape transport and lubricate the principal points at regular intervals.

1. To be cleaned with alcohol or spirit

— playback head
— capstans
— pressure rollers
— pulleys

To clean head, pressure roller and capstan it is also possible to use a drop-in cleaning cassette (SBC114-4822 389 20015).

2. Lubricating instructions

— See exploded view (Fig. 1)

ADJUSTMENTS AND CHECKS

Measuring equipment required

— Universal testcassette	SBC133-4822 397 30039
— Friction testcassette	4822 395 30054
— AC millivoltmeters	
— Spring scale 50-500 g	
— Wow-and-Flutter meter	

1. Azimuth (Fig. 2)

— Apply a 4 Ω load to both loudspeaker outputs
— Connect an AC millivoltmeter across both loudspeaker outputs.
— Play the 10 kHz signal of the azimuth test cassette.
— Adjust screw 76 for maximum output voltage readings.
— The maximum allowed difference between both channels is 4 dB.

2. Play take-up torque and supplying reel drag (Fig. 9)

— Insert the friction test cassette.
— The play take-up torque should be 40 to 60 g.cm (both directions).
— The supplying reel drag should be at least 3 g.cm (both directions).
— In case of deviating values spring 66 and washer 58 should be replaced (Fig. 9).

3. Pressure roller(Fig. 8)

The pressure which the pressure roller exerts on the capstan should lie between 295 and 355 g.
This pressure is measured as follows:
— Select PLAY mode (normal).
— Push pressure roller 78 with spring scale in indicated direction.
— Read the spring scale indication the moment the pressure roller is released from the capstan.
— To measure the pressure of pressure roller 72 first select REVERSE mode.

The pressure of the pressure roller cannot be adjusted; in case of a deviating value spring 74 should be replaced.

4. Wow and Flutter/tape speed

This check should be performed on a complete carradio, proceed as follows:
— Connect wow-and-flutter meter to loudspeaker outputs.
— Insert test cassette SBC133 and play the 3150 Hz signal.
— The wow-and-flutter value should be max. 0.35%.
— The tape speed should be 4.76 cm/sec ± 0.5%.
The speed can be adjusted with 3430 for normal play and with 3437 for reverse play.

In case of excessive wow-and-flutter values the following components should be checked for correct working (adjustment):

— motor (86)
— pressure rollers (72, 78)
— drive shafts (61)
— friction clutches (68)
— flywheels (61)
— belt (59)
— coupling toothed wheel (51) see 5

5. Coupling toothed wheel 51 (Fig. 10)

— The teeth of toothed wheel 51 should not completely mesh with the teeth of toothed wheel 68, 75 (see Fig. 10).
— This distance can be adjusted by bending lugs A and/or B.

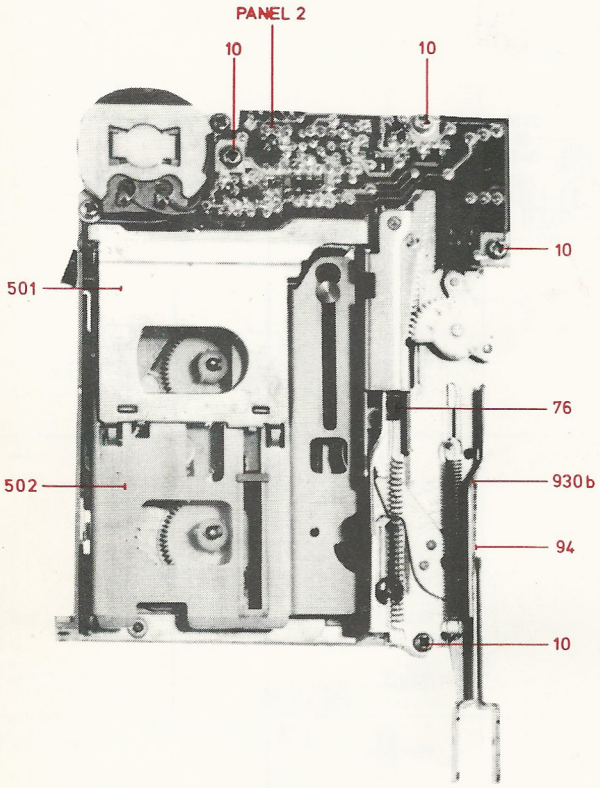

Fig. 2

30 876A

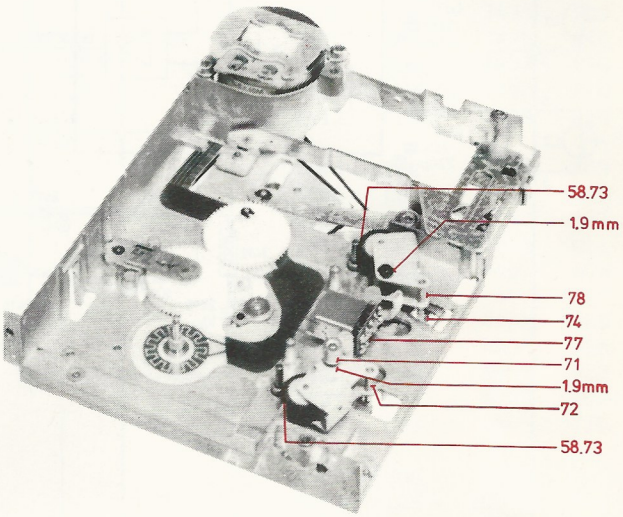

30 877A

Fig. 3

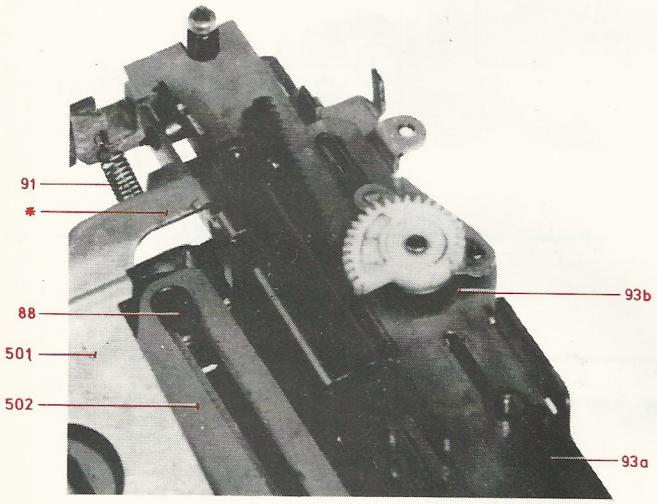

30 878A

Fig. 4

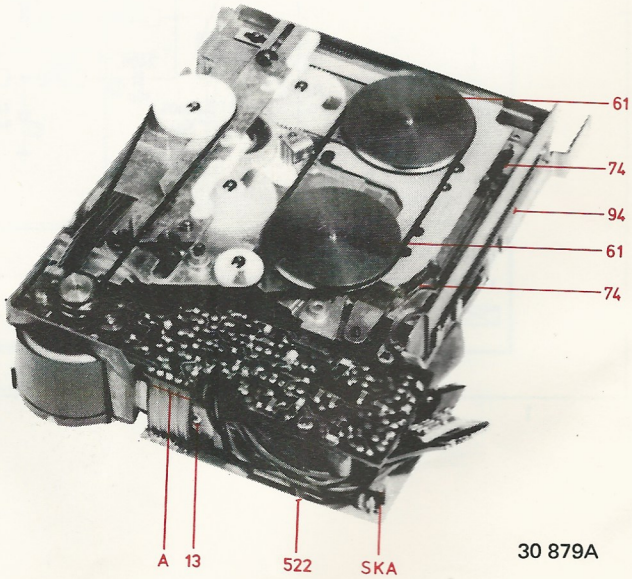

30 879A

Fig. 5

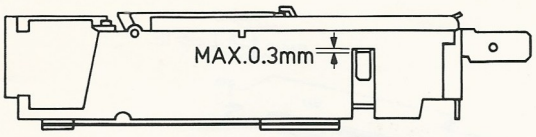

31 018 A12

Fig. 6

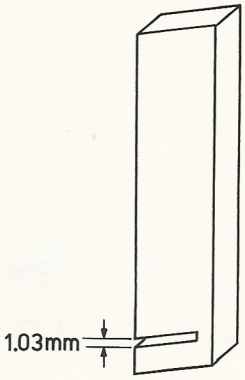

31 020 A12

Fig. 7

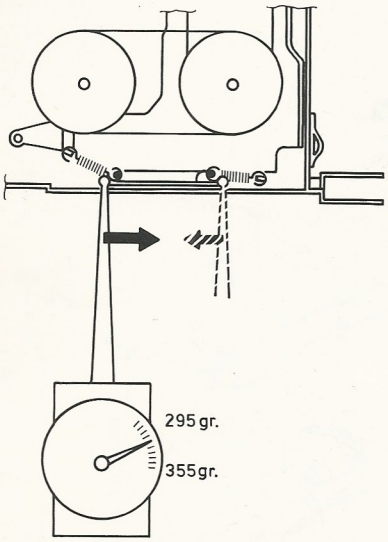

Fig. 8

31 017 A12

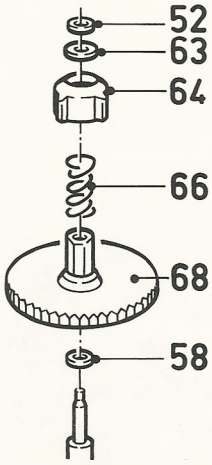

31 061 A12

Fig. 9

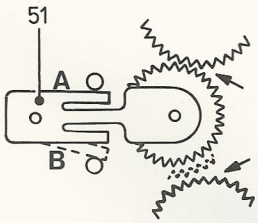

31 019 A12

Fig. 10

The working of the cassette player (Figs. 11 through 15)

The arrows in the above-mentioned figures indicate the movements made by the components in case of a certain operation. The components which are rotating are indicated by a bent arrow.
The appended tables give the sequence of the movements as they should be read in the figures.
The following guide-lines are applied here:

1 → 3 : movement of two different components.

1 ↳ 2, 2a : movement of one component which consists of various parts and which has, for the sake of clarity of the figure, been drawn at different places.

Fig. 11:	gives the initial position.
Fig. 12:	from (normal) PLAY mode to FAST FORWARD mode.
Fig. 13:	from (normal) PLAY mode to REWIND mode.
Fig. 14:	from (normal) PLAY mode to REVERSE mode.
Fig. 15:	from (normal) PLAY mode to eject.

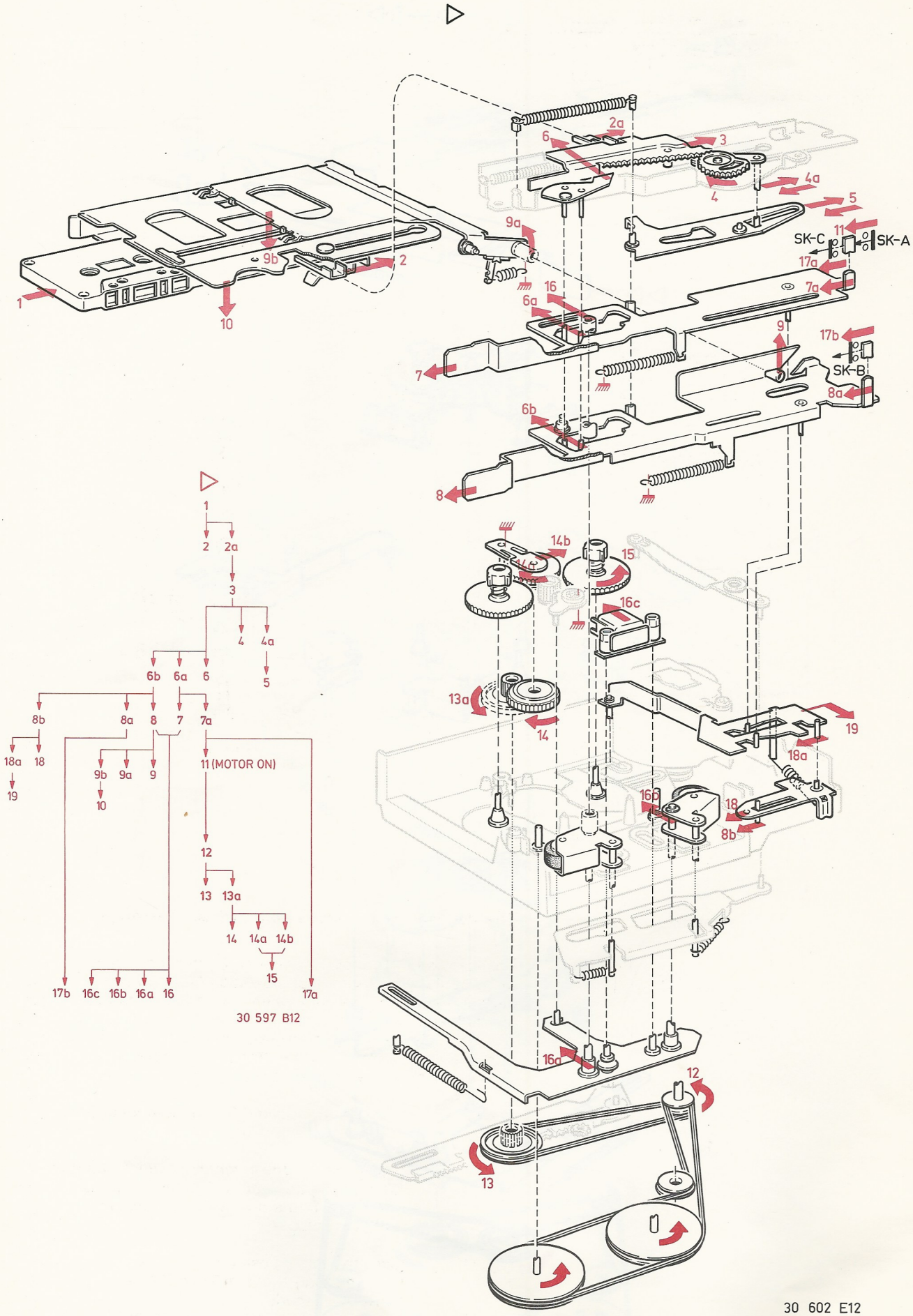

Fig. 11

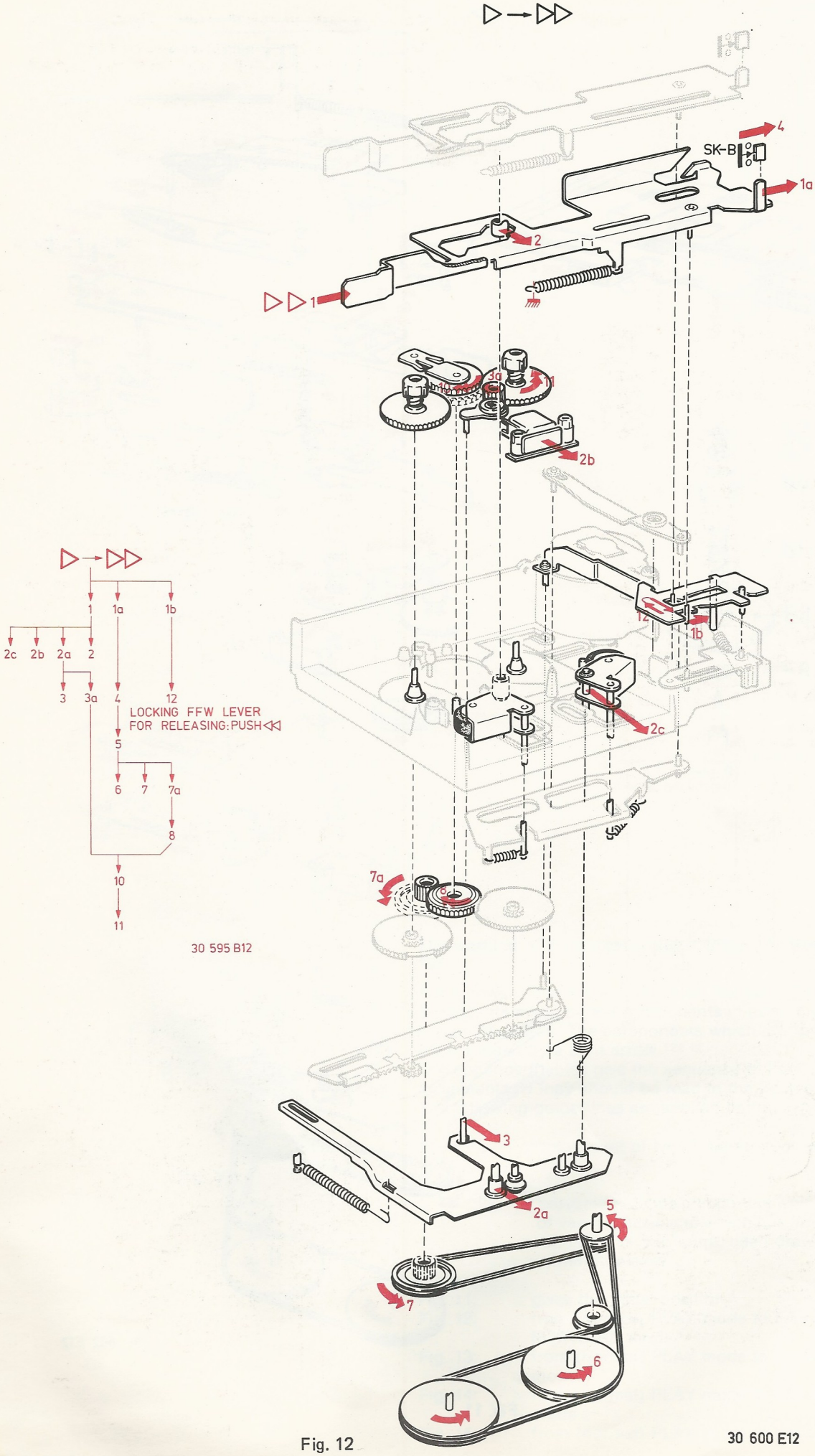

Fig. 12

30 600 E12

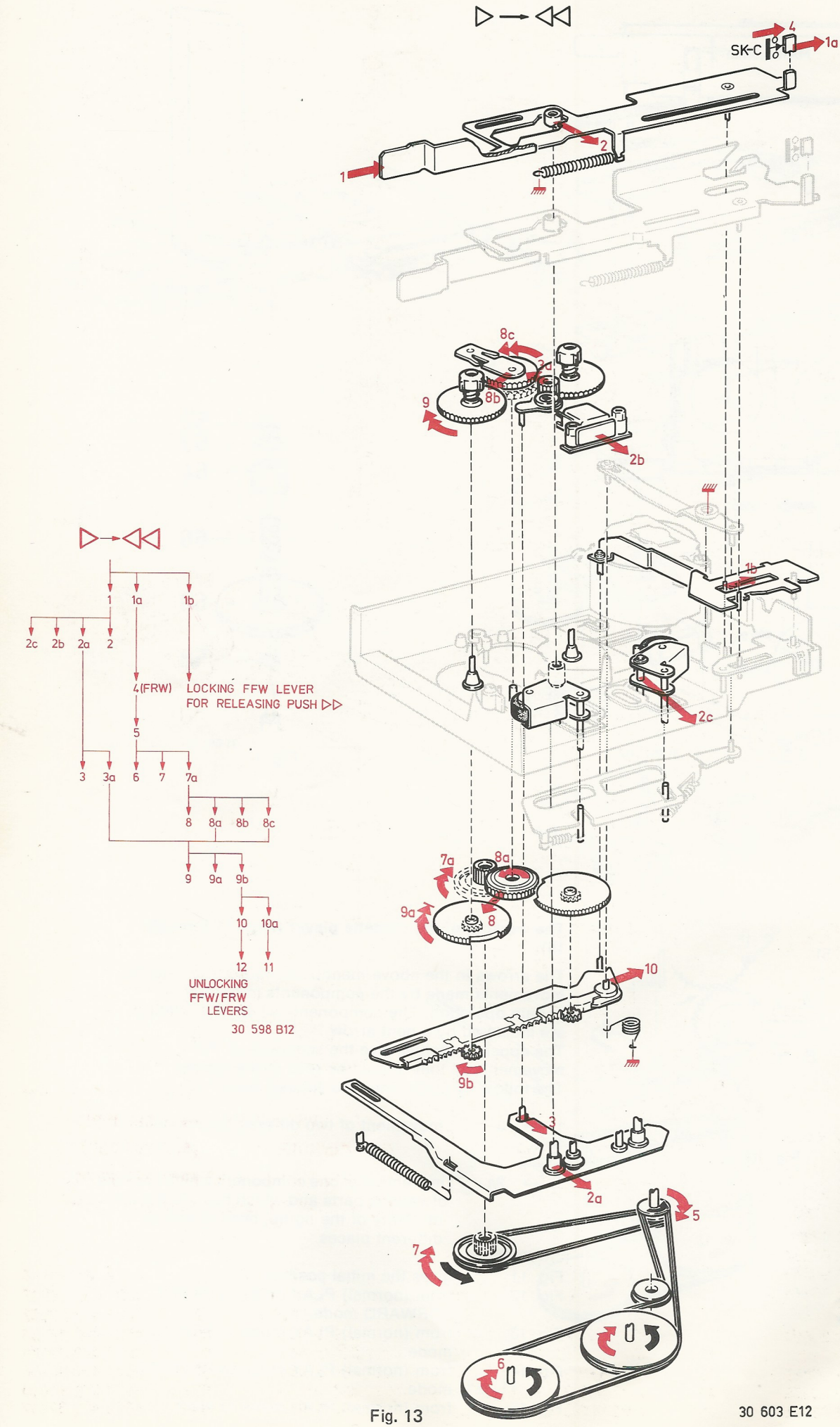

Fig. 13

30 603 E12

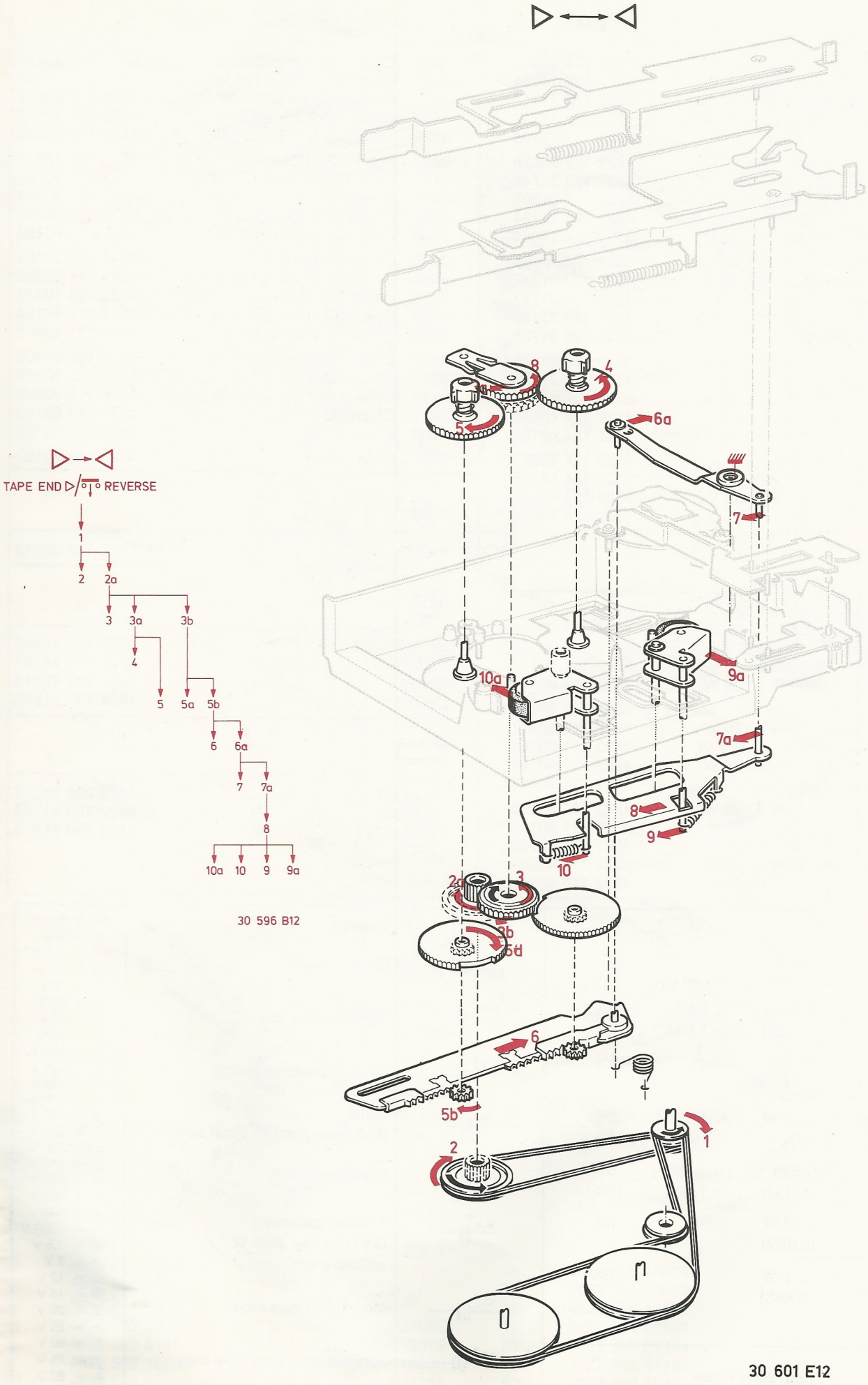
TAPE END
REVERSE
1
2
2a
3
3a
3b
4
5
5a
5b
6
6a
7
7a
8
10a
10
9
9a
30 596 B12
30 601 E12

Fig. 14

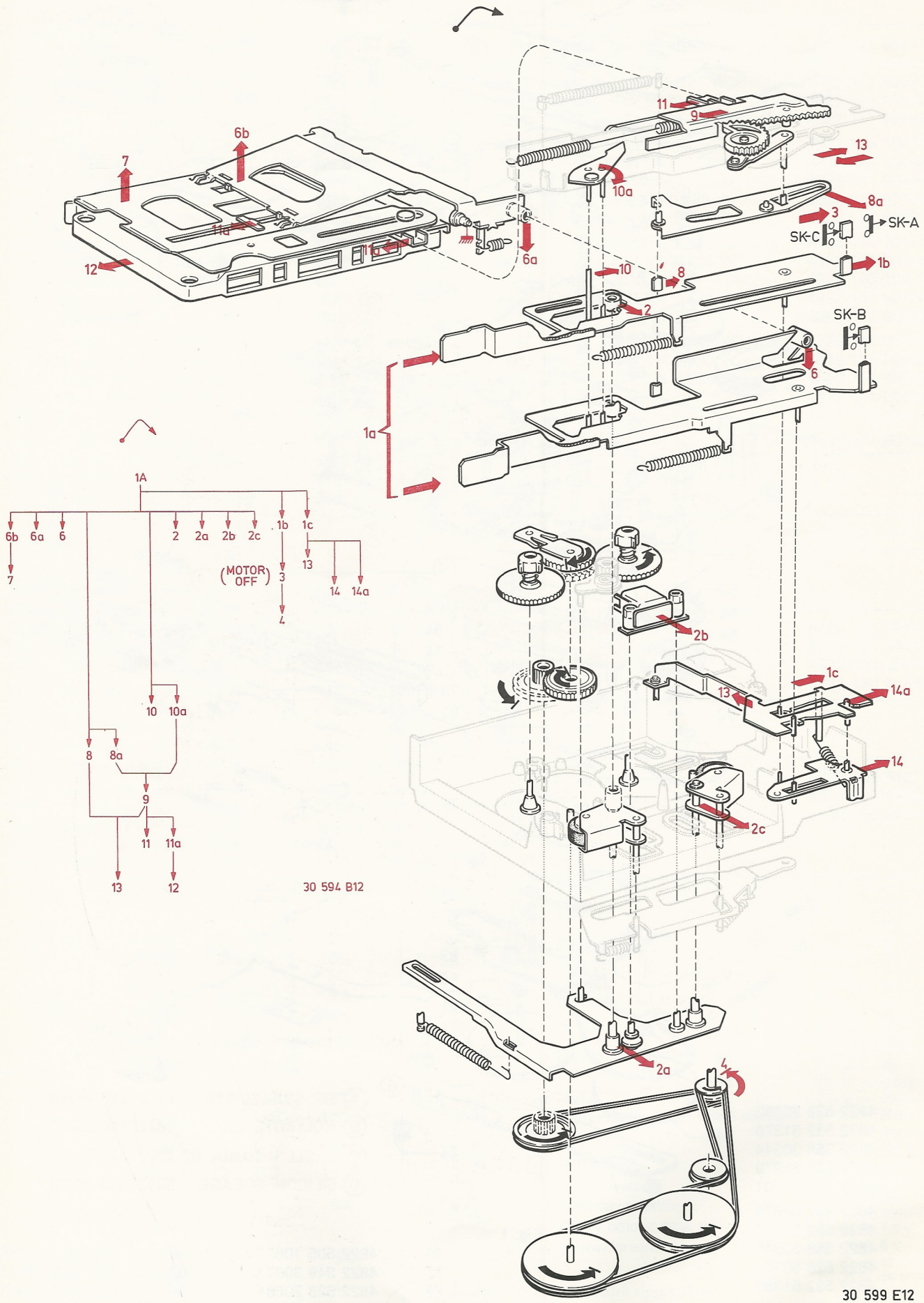
6b
7
11a
11a
12
6a
11
9
13
10a
8a
3
SK-C
SK-A
1b
10
8
2
SK-B
6
1a
1A
6b
6a
6
2
2a
2b
2c
1b
1c
7
(MOTOR OFF)
3
4
13
14
14a
10
10a
8
8a
9
11
11a
13
12
30 594 B12
2b
1c
13
14a
14
2c
2a
4
30 599 E12

Fig. 15

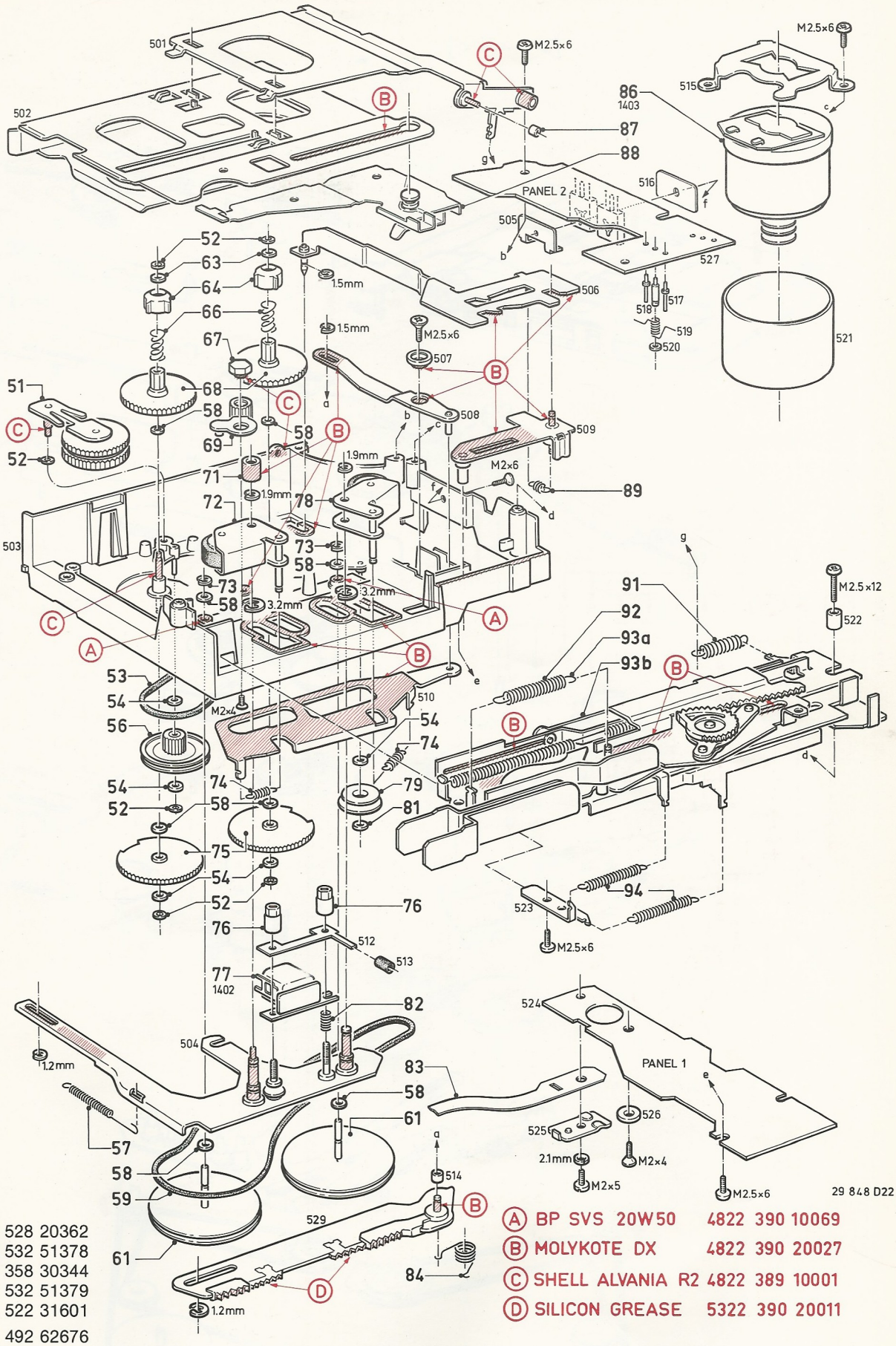

Ⓐ	BP SVS 20W50	4822 390 10069
Ⓑ	MOLYKOTE DX	4822 390 20027
Ⓒ	SHELL ALVANIA R2	4822 389 10001
Ⓓ	SILICON GREASE	5322 390 20011

Fig. 1

51	4822 528 20362					76	4822 505 10677	86	4822 361 30155
52	4822 532 51378					77	4822 249 30073	87	4822 532 10987
53	4822 358 30344					78	4822 528 70381	88	4822 443 60963
54	4822 532 51379					79	4822 528 80897	89	4822 492 32154
56	4822 522 31601					81	4822 532 51441	91	4822 492 32276
57	4822 492 62676					82	4822 492 51485	92	4822 492 32156
58	4822 532 51264					83	4822 466 10479	93a,b	4822 276 11013
59	4822 358 30345					84	4822 492 62677	94	4822 492 32157
61	4822 528 60174								
63	4822 532 51381								
64	4822 402 20094	71	4822 532 20885						
66	4822 492 51484	72	4822 528 70379						
* 67	4822 532 10988 NUT	73	4822 532 10986						
68	4822 528 90409	74	4822 492 32155						
69	4822 522 31598	75	4822 522 31599						

2401	Tantal 4.7 μF 20% 25 V	5322 124 14064
2402	Tantal 4.7 μF 20% 25 V	5322 124 14064
2403	Ceram 220 pF 10% 50 V	4822 122 31747
2404	Ceram 220 pF 10% 50 V	4822 122 31747
2405	Elco 10 μF 16 V	4822 124 21108
2406	Chip 10000 pF 10% 63 V	4822 122 31728
2407	Ceram 1000 pF 5% 50 V	4822 122 31746
2408	Chip 8.2 nF 10% 63 V	4822 122 31893
2410	Elco 220 nF 20% 50 V	4822 124 21124
2411	Tantal 4.7 μF 20% 25 V	5322 124 14064
2412	Tantal 4.7 μF 20% 25 V	5322 124 14064
3413	Ceram 220 pF 10% 50 V	4822 122 31747
2414	Ceram 220 pF 10% 50 V	4822 122 31747
2415	Elco 10 μF 16 V	4822 124 21108
2416	Chip 10000 pF 10% 63 V	4822 122 31728
2417	Ceram 1000 pF 5% 50 V	4822 122 31746
2418	Chip 8.2 nF 10% 63 V	4822 122 31893
2420	Tantal 220 nF 20% 35 V	5322 124 14074
2421	Elco 220 μF 50% 16 V	4822 124 40196
2422	Elco 220 μF 50% 10 V	4822 124 40181
2423	Chip 1 μF 20% 35 V	4822 124 20927
2425	Tantal 1 μF 20% 35 V	5322 124 14075
2426	Tantal 1 μF 20% 35 V	5322 124 14075
2427	Tantal 2.2 μF 20% 35 V	5322 124 14014

3402	Chip 820 Ω 5% 0,125 W	4822 111 90171
3403	Chip 43 k 5% 0,125 W	4822 111 90168
3404	Chip 4k3 5% 0,125 W	4822 111 90167
3405	Chip 6k8 5% 0,125 W	5322 111 90117
3409	Chip 2k0 5% 0,125 W	4822 111 90165
3410	Chip 680 Ω 5% 0,125 W	4822 111 90162
3412	Chip 820 Ω 5% 0,125 W	4822 111 90171
3413	Chip 43 k 5% 0,125 W	4822 111 90168
3414	Chip 4k3 5% 0,125 W	4822 111 90167
3415	Chip 6k8 5% 0,125 W	5322 111 90117
3419	Chip 2k0 5% 0,125 W	4822 111 90165
3420	Chip 680 Ω 5% 0,125 W	4822 111 90162
3422	Chip 390 k 5% 0,125 W	4822 111 90182
3423	Chip 100 Ω 5% 0,125 W	5322 111 90091
3424	Chip 4k3 5% 0,125 W	4822 111 90167

3425	Chip 6k8 5% 0,125 W	5322 111 90117
3426	Chip 820 k 5% 0,125 W	4822 111 90205
3427	Chip 1k 5% 0,125 W	5322 111 90092
3428	Chip 2k2 5% 0,125 W	5322 111 90102
3429	Chip 360 Ω 1% 0,125 W	4822 111 90288
3430	Potm. 330 Ω lin.	4822 105 10473
3431	Chip 130 Ω 5% 0,125 W	4822 111 90164
3432	Chip 130 Ω 5% 0,125 W	4822 111 90164
3433	Chip 36 k 5% 0,125 W	4822 111 90166
3434	Chip 36 k 5% 0,125 W	4822 111 90166
3435	Chip 130 Ω 5% 0,125 W	4822 111 90164
3436	Chip 360 Ω 1% 0,125 W	4822 111 90288
3437	Potm. 330 Ω lin	4822 105 10473
3438	Chip 130 Ω 5% 0,125 W	4822 111 90164
3439	Chip 1 k 5% 0,125 W	5322 111 90092
3440	Chip 2k2 5% 0,125 W	5322 111 90102
3442	Chip 2k4 5% 0,125 W	4822 111 90289
3443	Chip 2k4 5% 0,125 W	4822 111 90289
4401	Chip 0 Ω	4822 111 90163
4402	Chip 0 Ω	4822 111 90163
4404	Chip 0 Ω	4822 111 90163

BA315	4822 130 30843

BC369	5322 130 44593
BC558B	4822 130 44197
ON966	4822 130 42019
ON796	4822 130 41845

TDA1151	4822 209 81272
TDA1508	4822 209 81273
TDA3410	4822 209 81274

0.2 W (CR16)	⩽ 220 kΩ	5%
	> 270 kΩ	10%
0.33 W (CR25)	⩽ 1 MΩ	5%
	> 1 MΩ	10%
0.33 W (SFR25)		5%
0.25 W (VR25)	⩽ 10 MΩ	5%
	> 10 MΩ	10%
0.5 W (CR37)	⩽ 1 MΩ	5%
	> 1 MΩ	10%
0.67 W (CR52)		5%
1.15 W (CR68)		5%

(C) Chip component

ΔΔ*	Ceramic plate
●● *	Polyester flat foil
□ *	Polyester mepolesco
○□	Mylar (Polyester flat foil small sized)
○Δ*	Micropoco
■▲*	Tubular ceramic (body colour pink or yellow/green)
○ *	Miniature single elco
○○*	Subminiature tantalum cap.

*a = 2,5 V
b = 4 V
c = 6,3 V
d = 10 V
e = 16 V
f = 25 V
g = 40 V
h = 63 V
j = 100 V
l = 125 V
m = 150 V
n = 160 V
q = 200 V
r = 250 V
s = 300 V
t = 350 V
u = 400 V
v = 500 V
w = 630 V
x = 1000 V
A = 1,6 V
B = 6 V
C = 12 V
D = 15 V
E = 20 V
F = 35 V
G = 50 V
H = 75 V
I = 80 V

In the course of production the following changes have been introduced:

Electrical

Diode 6406 has been added between pin 7 and pin 12 of IC6404.
The anode is connected with pin 7.

6404
1N4001 4822 130 31438.

Reason: suppressing switch-on peaks.

Mechanical

The azimuth screw, item number 76, has been replaced by a self-locking nut M2 (see Fig. 1).
76a 4822 505 10677
76b 4822 506 90024

Reason: quality improvement.

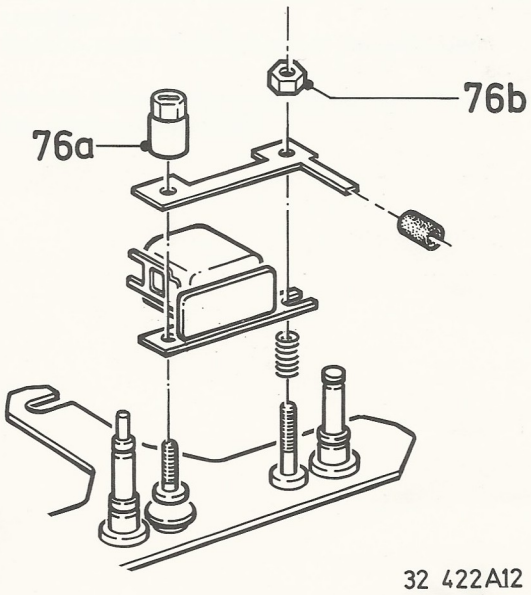

Fig. 1

Copyright reserved Confidential information for Service-dealers
Printed in the Netherlands

Previously published: A83-313

With change code WA01 a new swivel clutch (item no. 51) has been introduced.
Reason: problems with the old clutch.

Service will supply the new clutch under the same code number.

Also the cassette holder (item no. 88) has been changed.
Reason: better functioning of cassette eject.

Service will supply the changed cassette holder under the same code number.

Copyright reserved. Confidential information for Service-dealers
Printed in the Netherlands

1984-02-06

Auto-reverse casette-deck D6

A84-304

During production the following changes have been made.

2401, 2402, 2411, 2412 changed into 2μ2 16 V tantal (4822 124 10204).
2405, 2415 changed into 4μ7 16 V tantal (5322 124 14064).
Reason: improvement of sound quality.

Corrections to manual.

— Circuit diagram 30526E.

- On panel 1 (pre-amp), item 2423 should be changed into 2428 1 μF oh.
- On panel 2 (control), item 2423 should be changed into 5n6 △△.
  On panel 2 (control), type no of IC6402, 6403 should be changed into TDA1151.

— Wiring diagram 30533C.

On panel 1, item 2423 should be changed into 2428.

Service Service Service Information

1984-12-03

D6 Deck

A84-341

Previously published: A83-313
A83-326
A84-304

Corrections to the Service Manual:

Replace item 2 of "Adjustments and Checks" by the following text:

— Insert the friction test cassette in the set.
The play take-up torque should be 40-60 grcm for both directions.
— The supplying reel drag should be at least 3 grcm for both directions.
— In case of deviating value(s), clutch gearwheel 51 should be replaced.
This is done as follows:

- remove belt 53
- remove wheel 56 } see exploded view
- it is now possible to remove a clamping ring and to take out item 51 via the cassette compartment.

Attention When mounting the new clutch gearwheel, be sure to remount the various rings!

* In some types of cars (diesel version) it may occur that the cassette holder starts to rattle.
This can be prevented by sliding a piece of shrink-on sleeve (4822 321 40081) over the guide and to heat it, see Fig. 1, 2, 3.
During production all tape-decks will be provided with this shrink-on sleeve.
For a short period service will deliver this shrink on sleeve (10 cm).

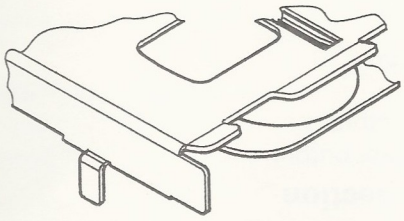

Fig. 1

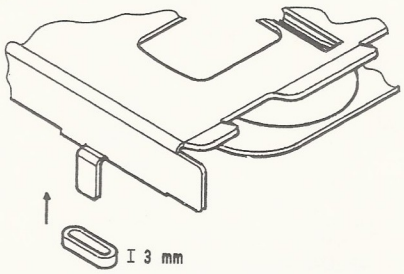

Fig. 2

Fig. 3