CY-VMX6800U SYSTEM BLOCK

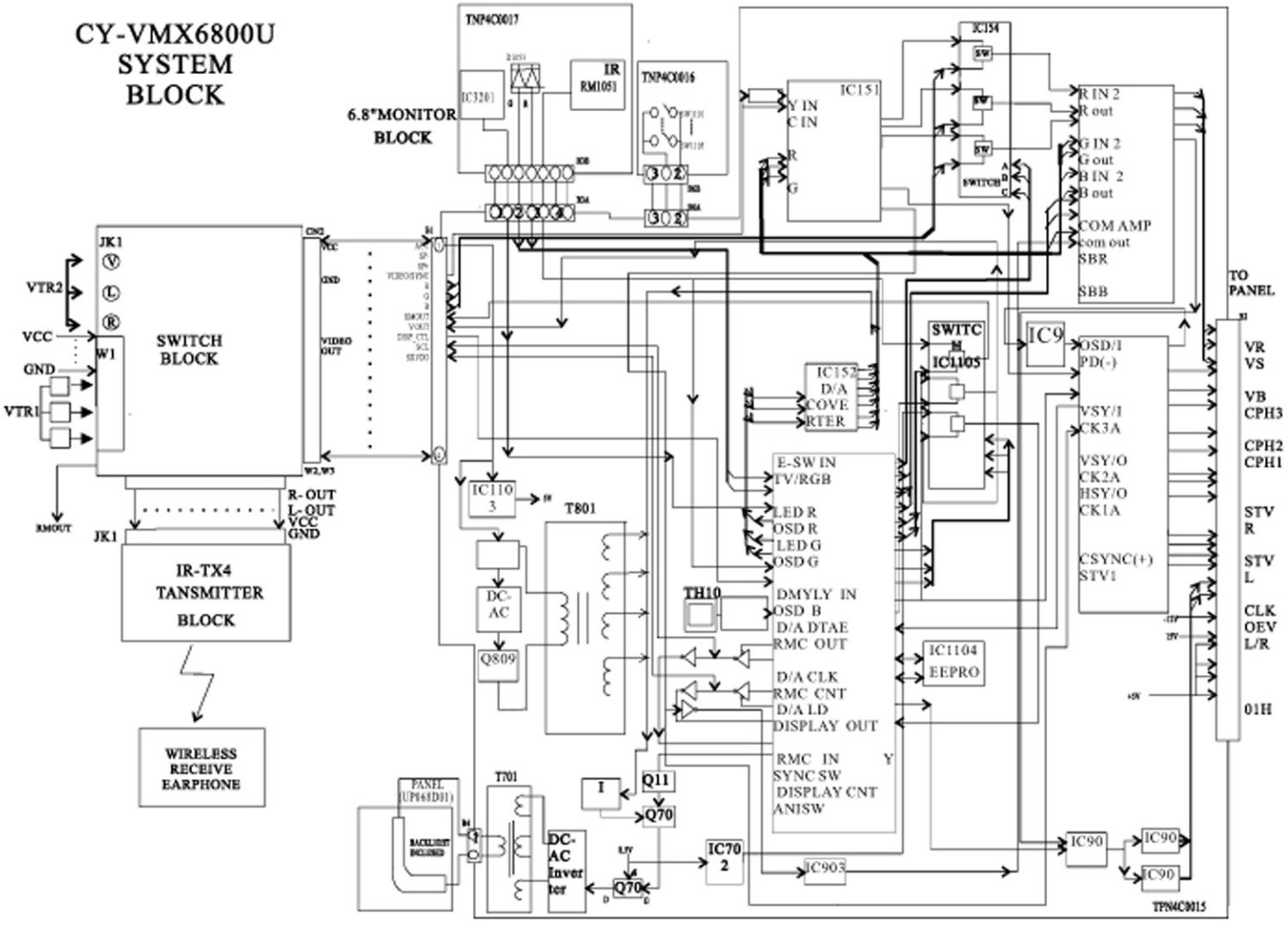

CY-VMX6800U SYSTEM BLOCK

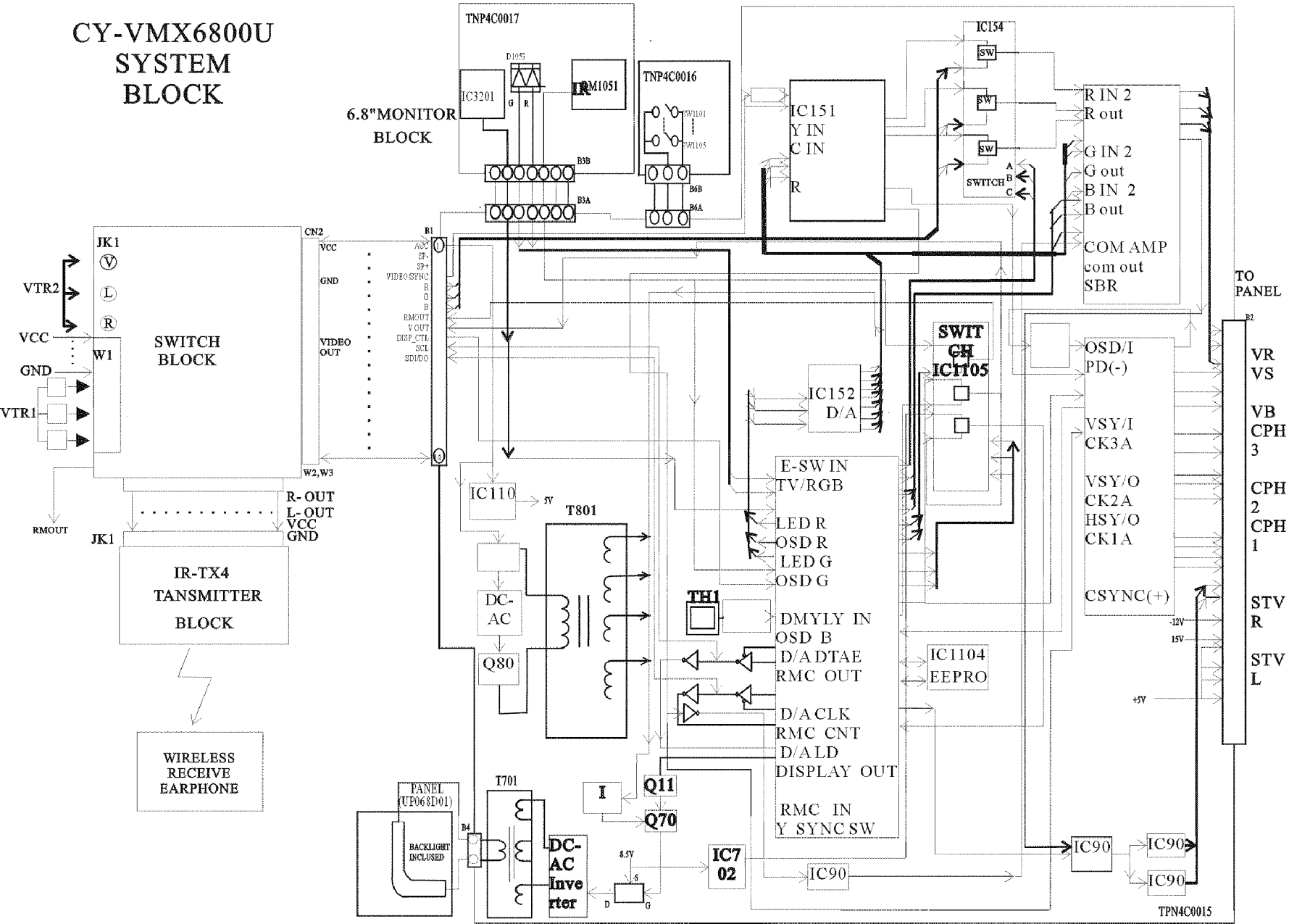

CY-VMX6800U SYSTEM BLOCK

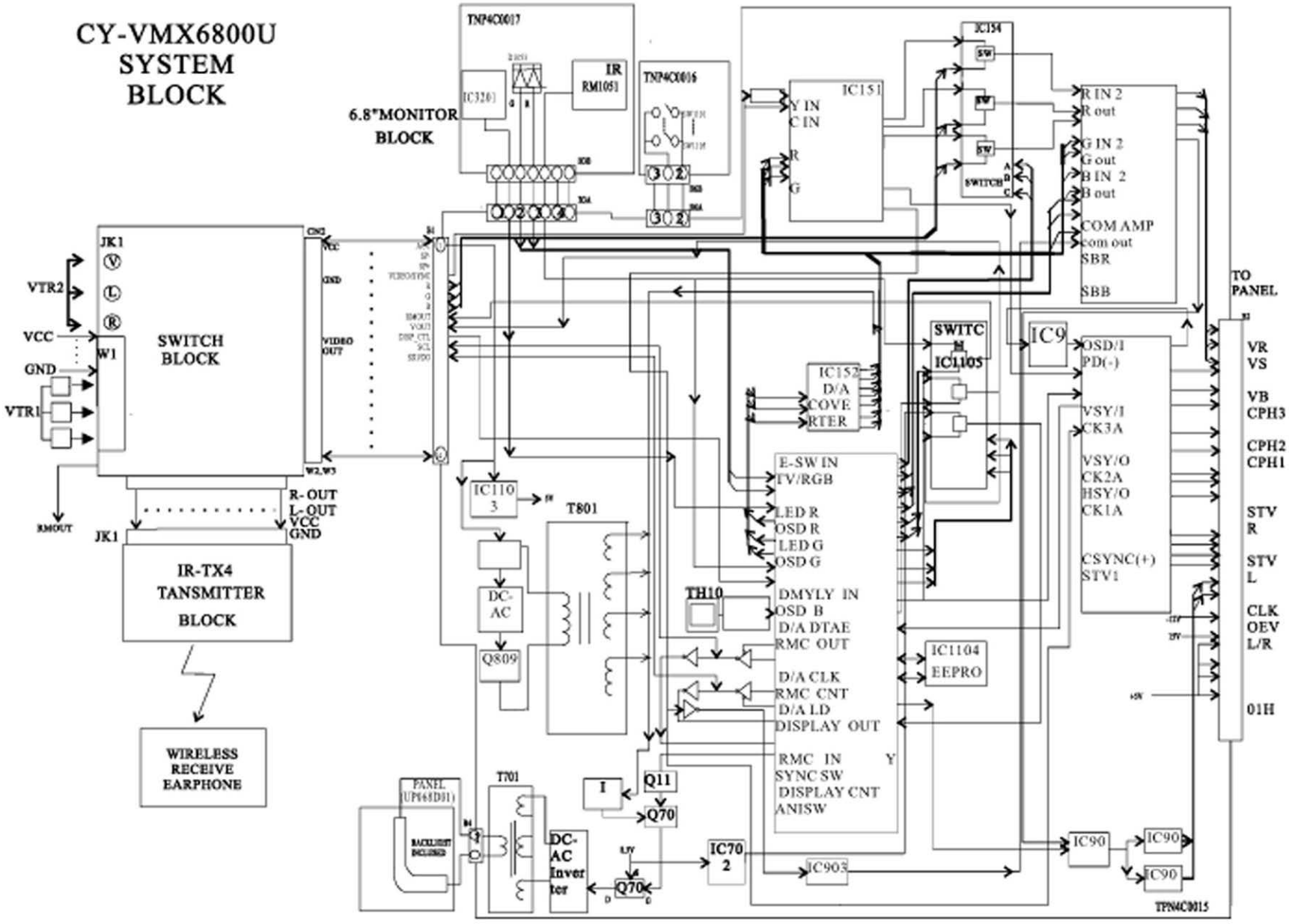

CY-VMX6800U SYSTEM BLOCK

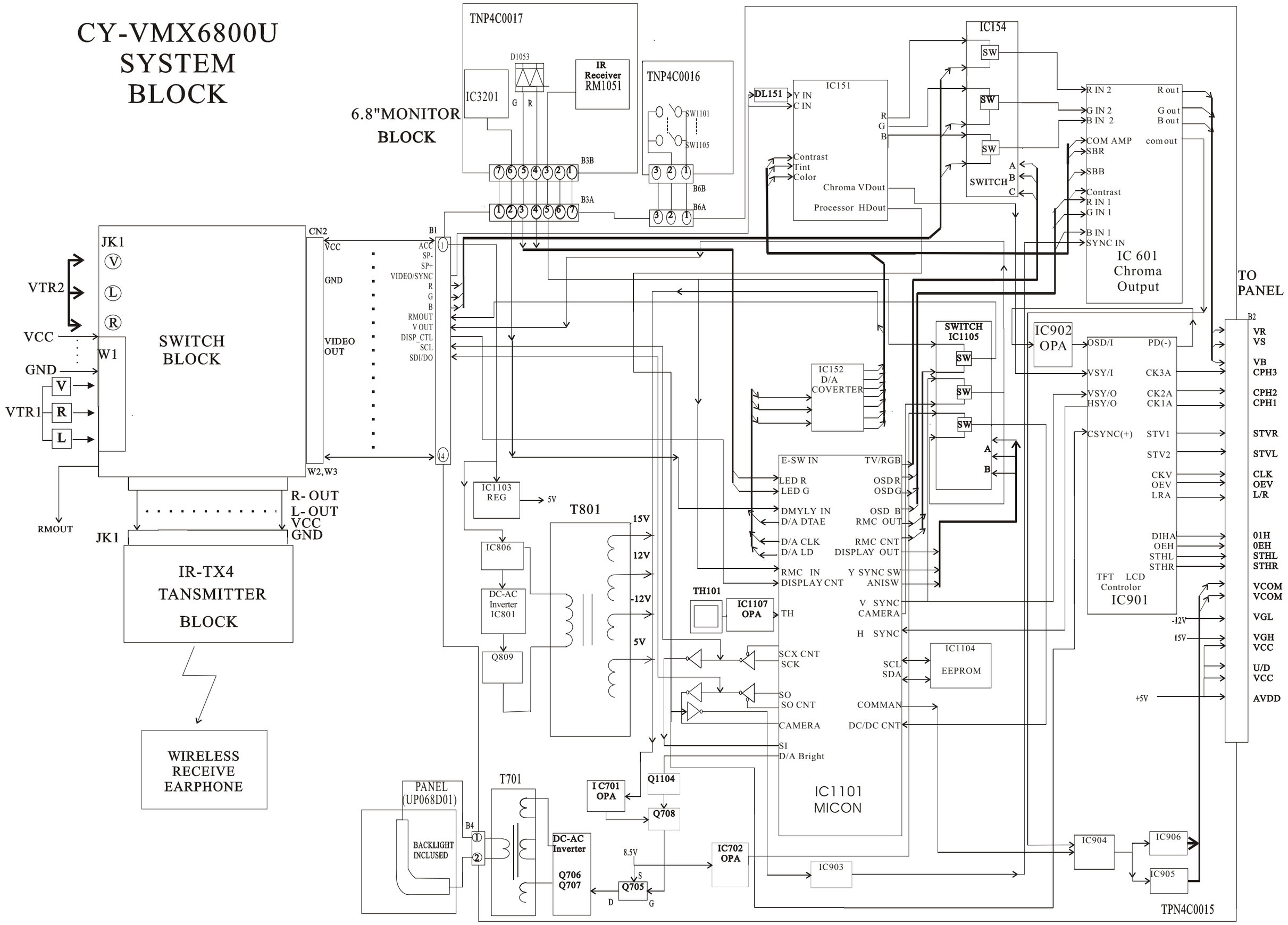

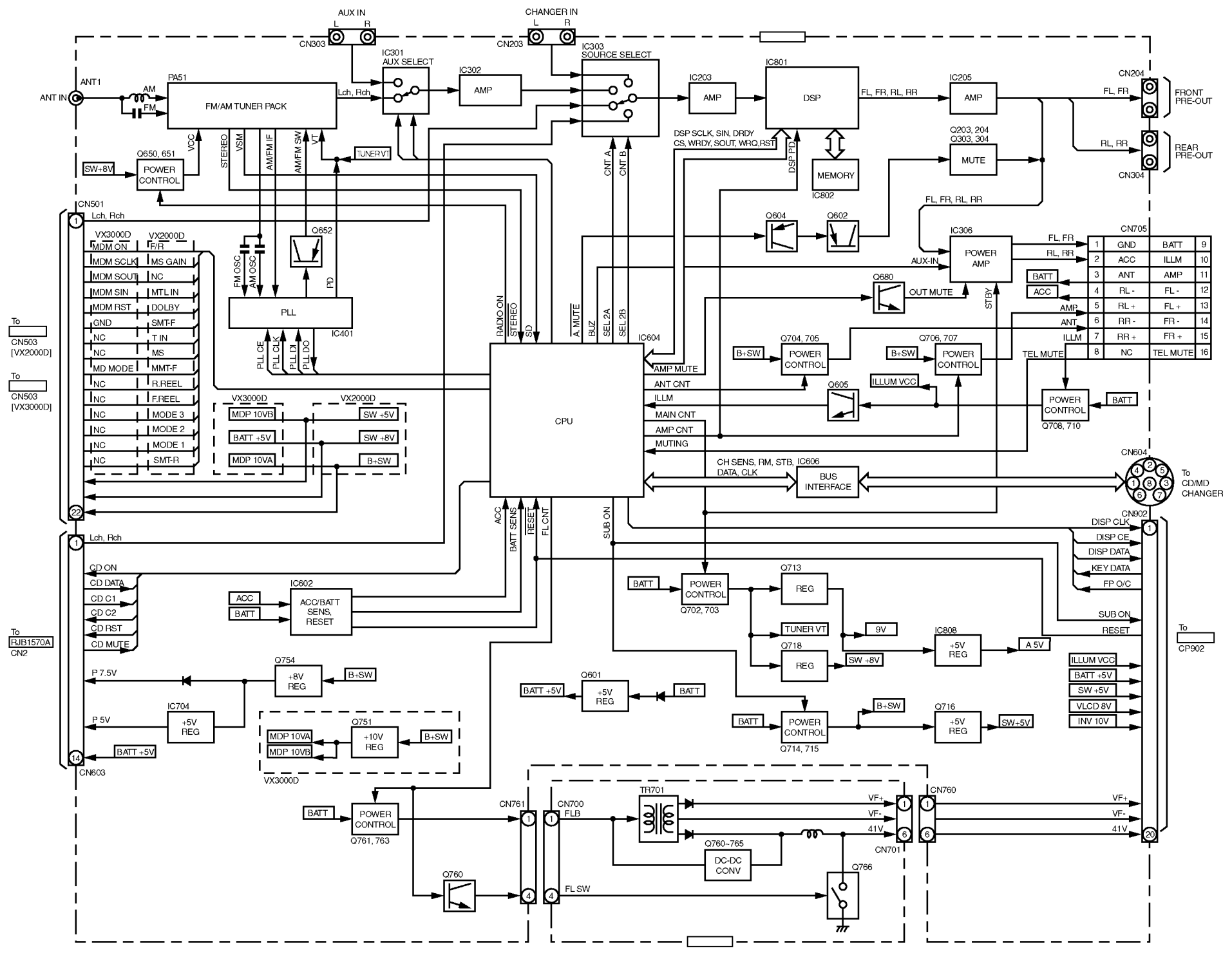
AUX IN
L R
CN303
CHANGER IN
L R
CN203
ANT IN
ANT1
AM
FM
PA51
FM/AM TUNER PACK
Lch, Rch
IC301
AUX SELECT
IC302
AMP
IC303
SOURCE SELECT
IC203
AMP
IC801
DSP
FL, FR, RL, RR
IC205
AMP
CN204
FL, FR
FRONT PRE-OUT
RL, RR
REAR PRE-OUT
CN304
Q203, 204
Q303, 304
MUTE
MEMORY
IC802
DSP SCLK, SIN, DRDY
CS, WRDY, SOUT, WRQ,RST
DSP PD
CNT A
CNT B
VCC
STEREO
VSM
AM/FM IF
AM/FM SW
VT
TUNER VT
SW+8V
Q650, 651
POWER CONTROL
CN501
Lch, Rch
VX3000D
MDM ON
MDM SCLK
MDM SOUT
MDM SIN
MDM RST
GND
NC
NC
MD MODE
NC
NC
NC
NC
NC
VX2000D
F/R
MS GAIN
NC
MTL IN
DOLBY
SMT-F
T IN
MS
MMT-F
R.REEL
F.REEL
MODE 3
MODE 2
MODE 1
SMT-R
Q652
FM OSC
AM OSC
PD
PLL
IC401
PLL CE
PLL CLK
PLL DI
PLL DO
RADIO ON
STEREO
SD
A MUTE
BUZ
SEL 2A
SEL 2B
IC604
CPU
AMP MUTE
ANT CNT
ILLM
MAIN CNT
AMP CNT
MUTING
Q604
Q602
IC306
POWER AMP
AUX-IN
FL, FR
RL, RR
Q680
OUT MUTE
STBY
CN705
GND
ACC
RL -
RL +
RR -
RR +
NC
BATT
ILLM
FL -
FL +
FR -
FR +
TEL MUTE
AMP
ANT
Q704, 705
POWER CONTROL
B+SW
Q706, 707
POWER CONTROL
ILLUM VCC
Q605
POWER CONTROL
Q708, 710
BATT
To CN503 [VX2000D]
To CN503 [VX3000D]
VX3000D
MDP 10VB
BATT +5V
MDP 10VA
VX2000D
SW +5V
SW +8V
B+SW
CH SENS, RM, STB, DATA, CLK
IC606
BUS INTERFACE
CN604
To CD/MD CHANGER
ACC
BATT SENS
RESET
FL CNT
SUB ON
CN902
DISP CLK
DISP CE
DISP DATA
KEY DATA
FP O/C
SUB ON
RESET
To CP902
Lch, Rch
CD ON
CD DATA
CD C1
CD C2
CD RST
CD MUTE
To RJB1570A CN2
IC602
ACC/BATT SENS, RESET
ACC
BATT
BATT
POWER CONTROL
Q702, 703
Q713
REG
TUNER VT
9V
Q718
REG
SW +8V
IC808
+5V REG
A 5V
ILLUM VCC
BATT +5V
SW +5V
VLCD 8V
INV 10V
P 7.5V
Q754
+8V REG
B+SW
BATT +5V
Q601
+5V REG
BATT
P 5V
IC704
+5V REG
Q751
+10V REG
MDP 10VA
MDP 10VB
B+SW
VX3000D
BATT +5V
CN603
BATT
POWER CONTROL
Q714, 715
B+SW
Q716
+5V REG
SW+5V
BATT
POWER CONTROL
Q761, 763
CN761
CN700
FLB
TR701
VF+
VF-
41V
CN701
CN760
Q760~765
DC-DC CONV
Q766
Q760
FL SW

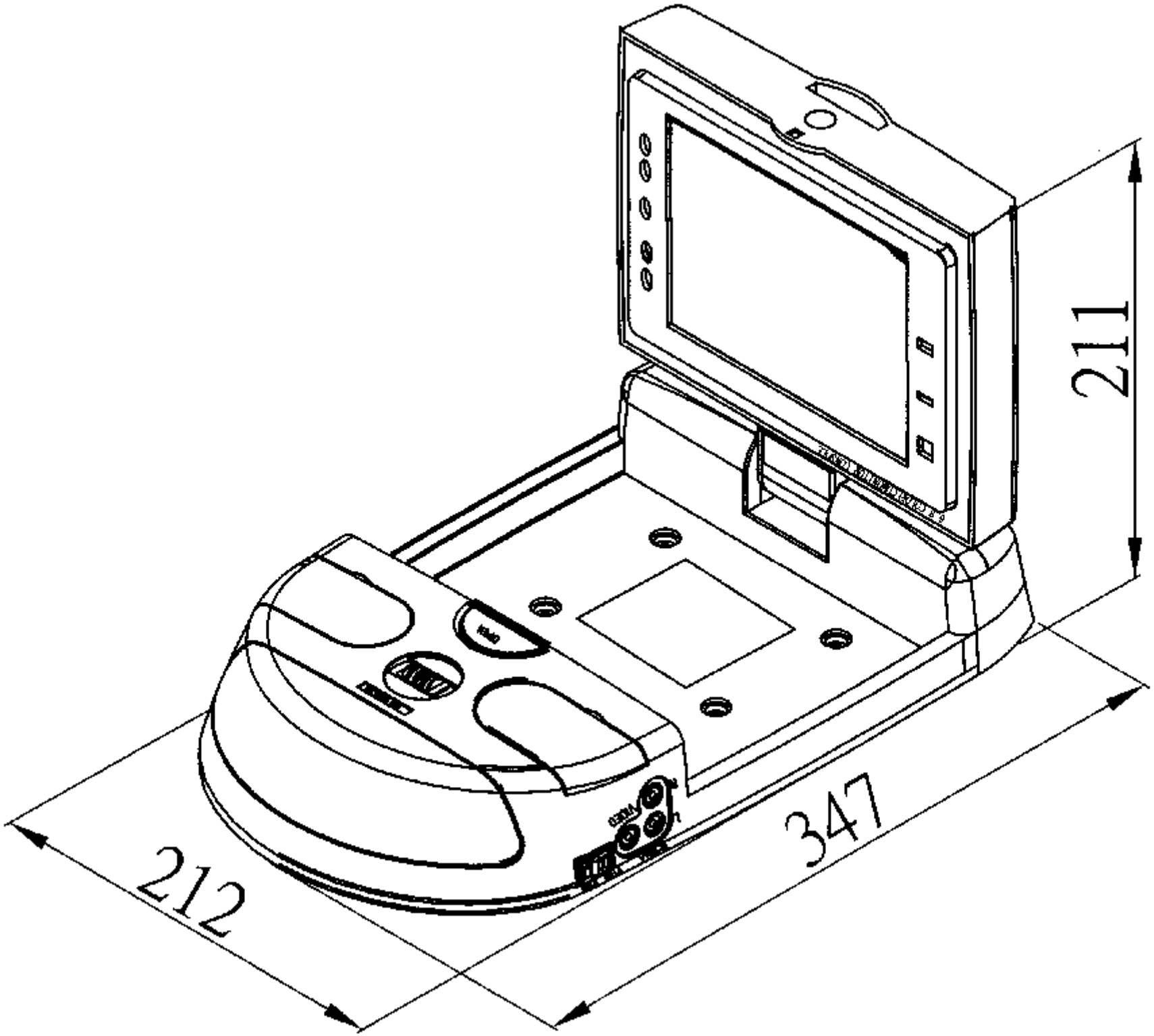
211
347
212

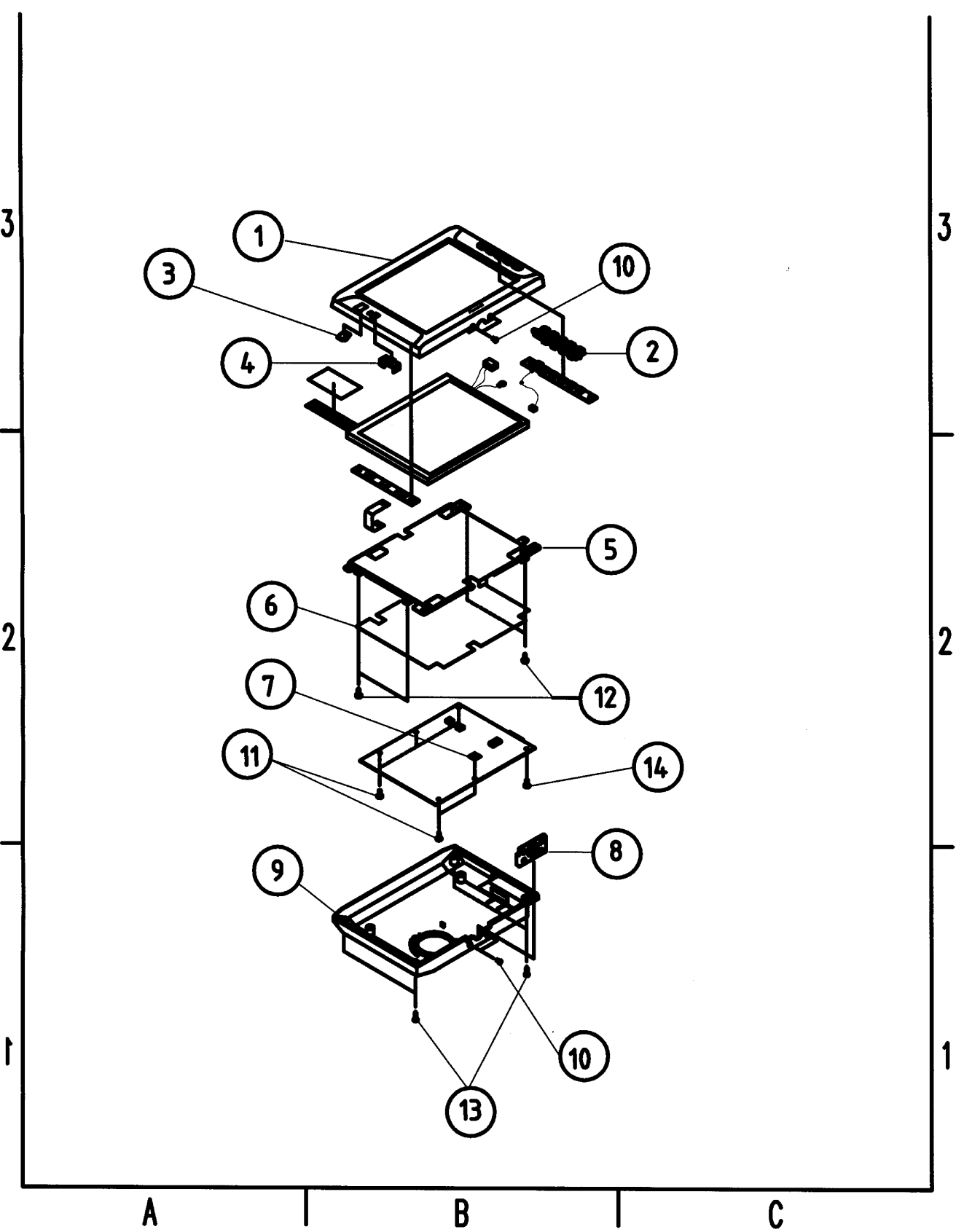
1
2
3
4
5
6
7
8
9
10
10
11
12
13
14
A
B
C
1
2
3

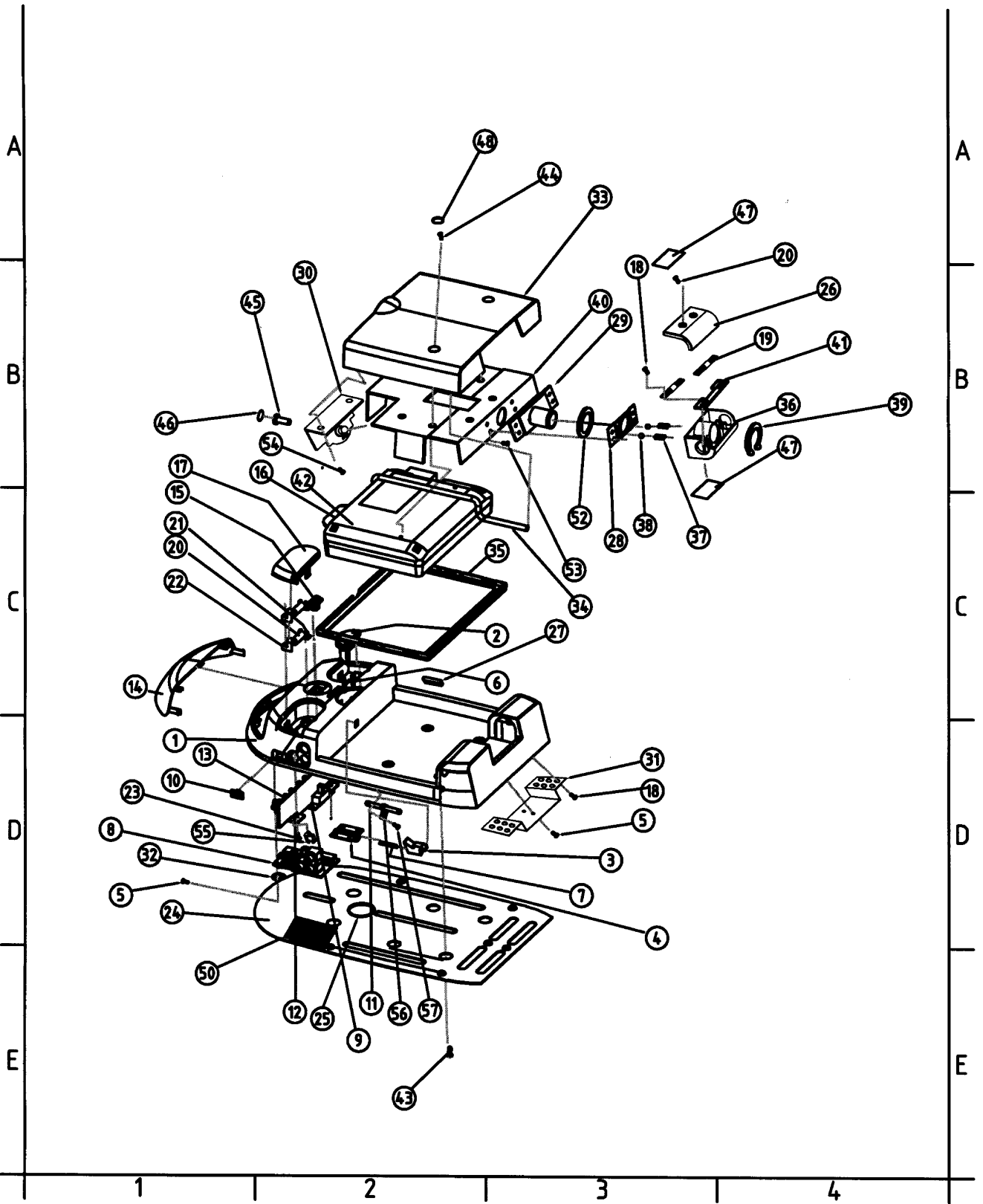
A
B
C
D
E
1
2
3
4
48
44
33
47
20
18
26
30
45
40
29
19
41
46
36
39
54
17
16
42
15
21
20
22
52
28
38
37
47
35
53
34
2
27
6
14
1
13
10
31
18
23
5
8
55
3
32
7
5
24
4
50
12
25
9
11
56
57
43

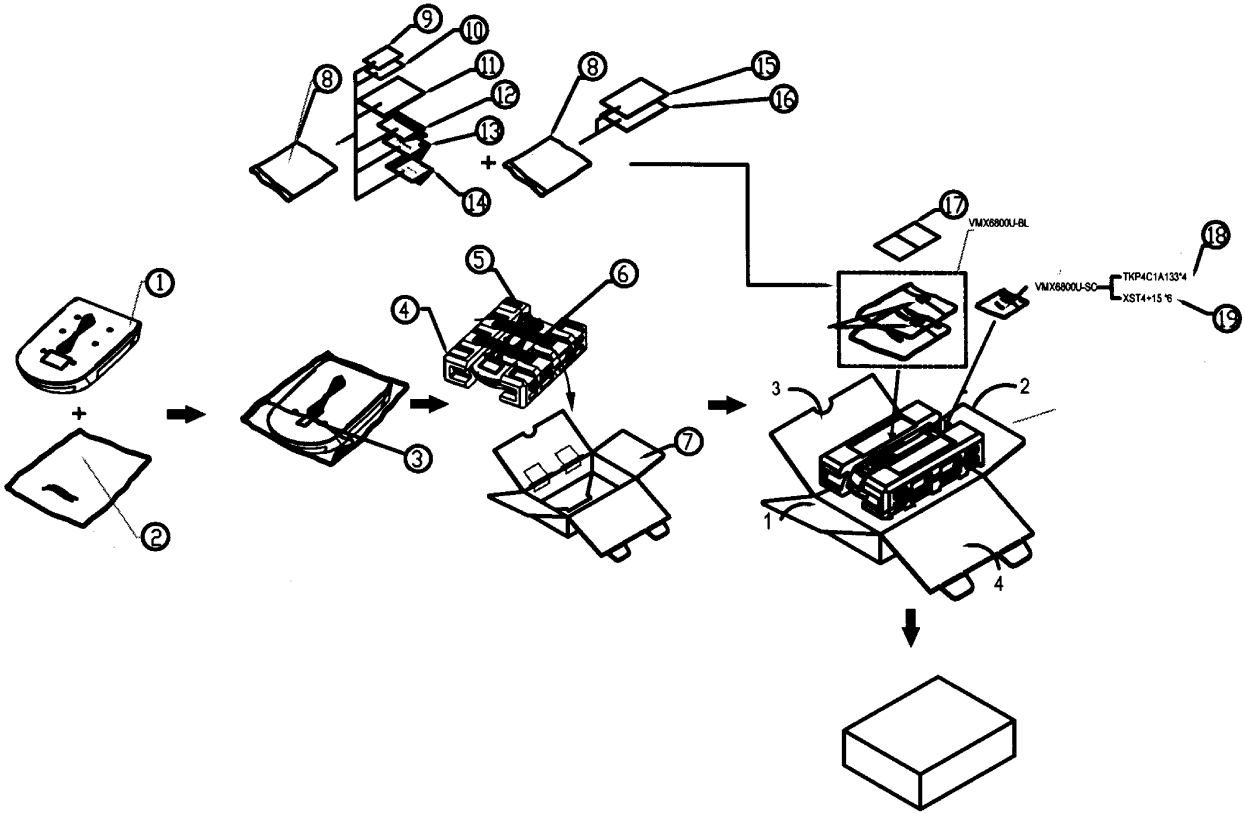

·Item number listed below should not order regular spare parts(not available)

NO.	PART NO.	PARTNAME&DESCRIPTION	REMARKS
1	CY-VMX6800U	6.8" COLOR LCD MONITOR	
2	TPE4C1A017	POLYLON	
3	B410-0080	TAPE(0.05M)*4	
4	TPD4C1A056	POLYLON	
5	TSX4C380	TPC4C1A320	
6	B410-0990	TAPE(0.25M)*2	
7	TPC4C1A320	PACKING CASE	
8	YEF4C190300	INSTRUCTION BOOK BAG*2	
9	TQD4C1A116	CIRCUIT LABEL	
10	TQF4C1A096	HP WARNING LABEL	
11	TQB4C1A238	INSTRUCTION BOOK	
12	YFM094C023ZA	SVC CARD(USA)	
13	YFM074C124ZA	WAYYANTY CARD	
14	YFM094C135ZA	WARRANTY	
15	YFM074C133ZA	WARRANTY CARD(CANADA)	
16	YFM024C196ZA	CANADA LABEL	
17	TKP4C1A133	SCREW SHEET	
18	XST4+15	SCREW*6	
19	YEF4C08120	SCREW BAG	

TVSA0409

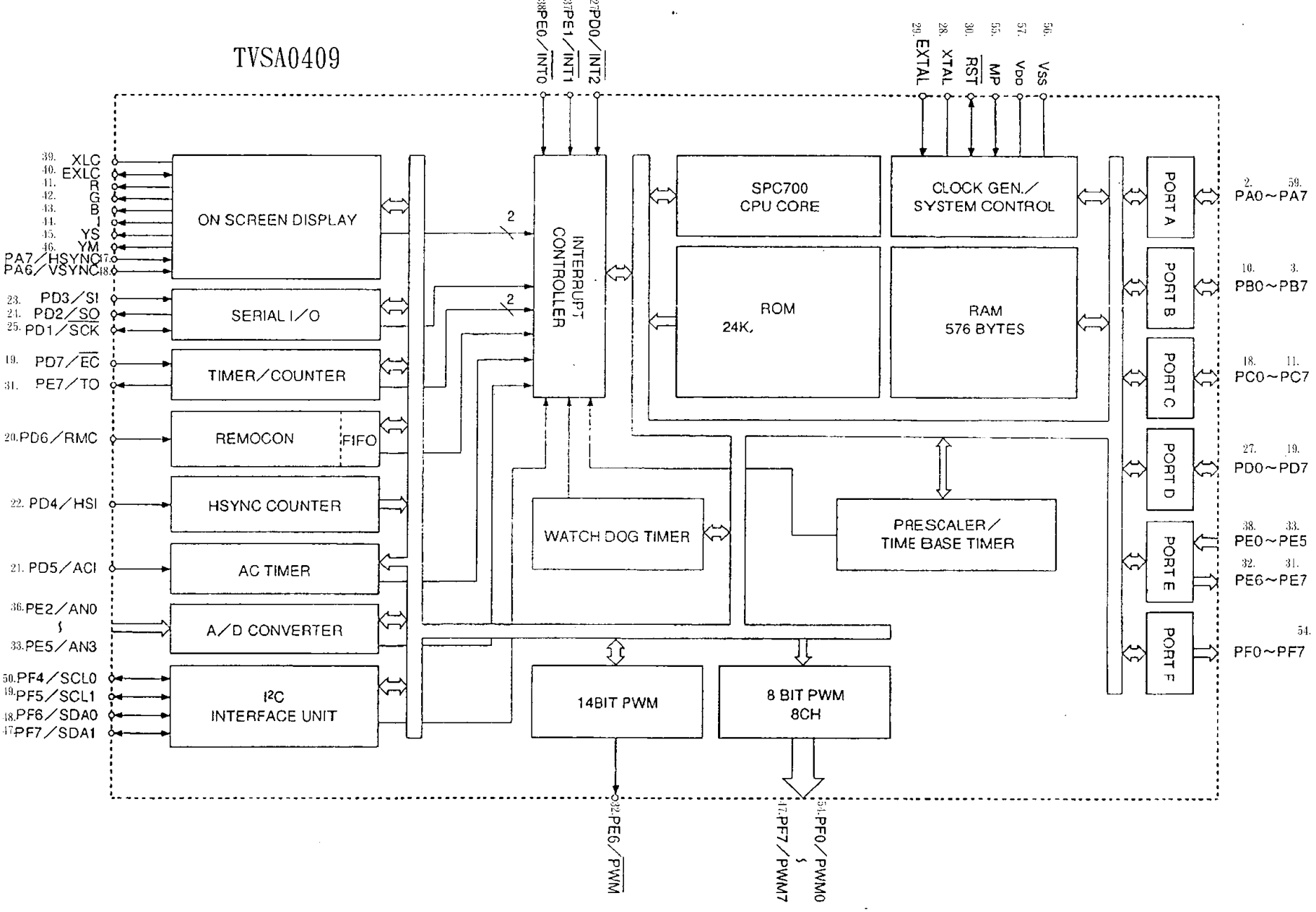
ON SCREEN DISPLAY
SERIAL I/O
TIMER/COUNTER
REMOCON
FIFO
HSYNC COUNTER
AC TIMER
A/D CONVERTER
I²C INTERFACE UNIT
INTERRUPT CONTROLLER
SPC700 CPU CORE
CLOCK GEN./ SYSTEM CONTROL
ROM 24K
RAM 576 BYTES
WATCH DOG TIMER
PRESCALER/ TIME BASE TIMER
14BIT PWM
8 BIT PWM 8CH
PORT A
PORT B
PORT C
PORT D
PORT E
PORT F
39. XLC
40. EXLC
41. R
42. G
43. B
44. I
45. YS
46. YM
PA7/HSYNC 17
PA6/VSYNC 18
23. PD3/SI
24. PD2/SO
25. PD1/SCK
19. PD7/EC
31. PE7/TO
20. PD6/RMC
22. PD4/HSI
21. PD5/ACI
36. PE2/AN0
33. PE5/AN3
50. PF4/SCL0
49. PF5/SCL1
48. PF6/SDA0
47. PF7/SDA1
38. PE0/INT0
37. PE1/INT1
27. PD0/INT2
29. EXTAL
28. XTAL
30. RST
55. MP
57. VDD
56. VSS
2. PA0~PA7 59.
10. PB0~PB7 3.
18. PC0~PC7 11.
27. PD0~PD7 19.
38. PE0~PE5 33.
32. PE6~PE7 31.
PF0~PF7 54.
32. PE6/PWM
47. PF7/PWM7
54. PF0/PWM0

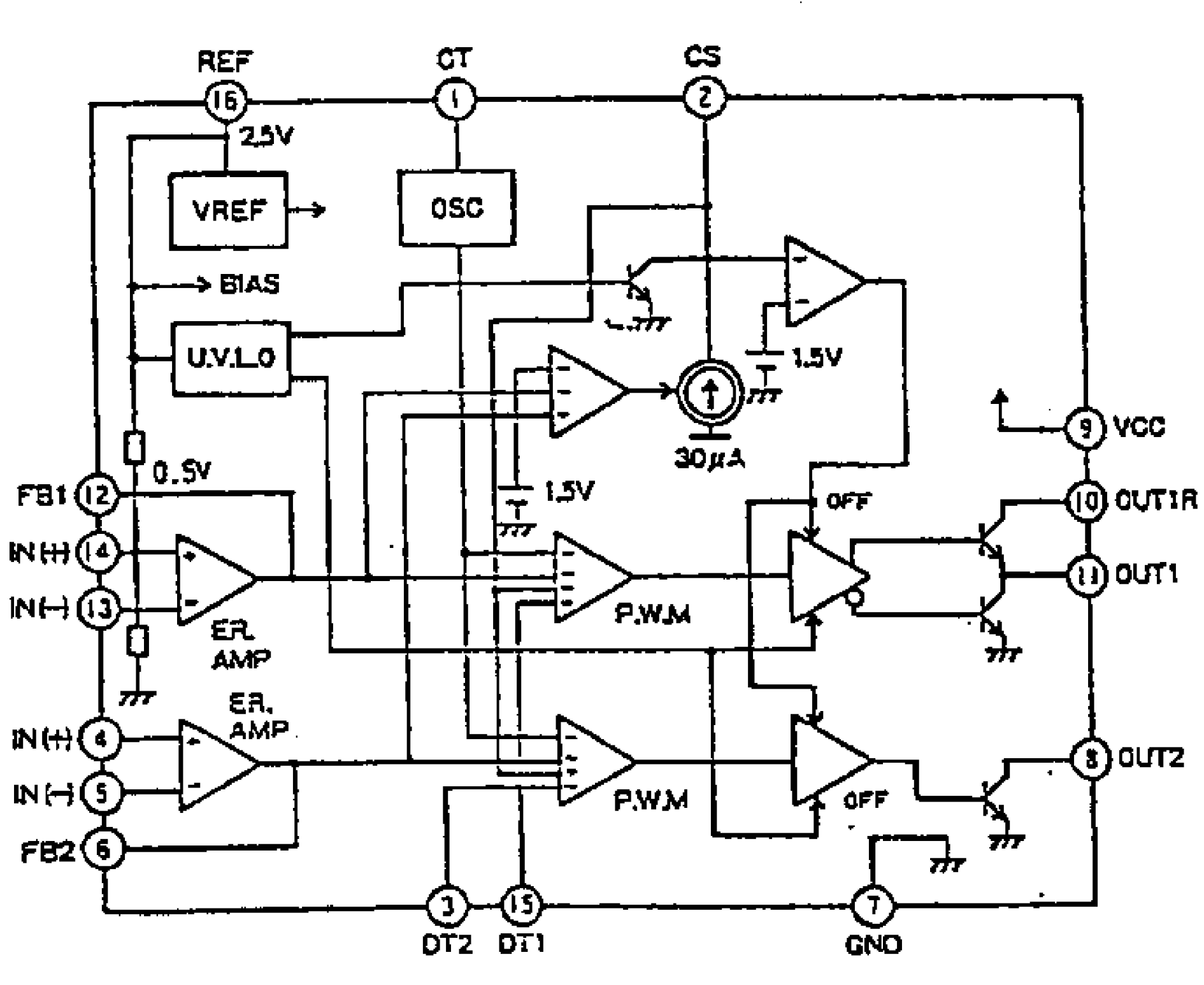
REF
CT
CS
16
1
2
2.5V
VREF
OSC
BIAS
U.V.L.O
1.5V
30μA
VCC
9
0.5V
FB1
12
1.5V
OFF
10
OUT1R
IN(+)
14
IN(-)
13
ER.
AMP
P.W.M
11
OUT1
ER.
AMP
IN(+)
4
IN(-)
5
P.W.M
OFF
8
OUT2
FB2
6
3
15
7
DT2
DT1
GND

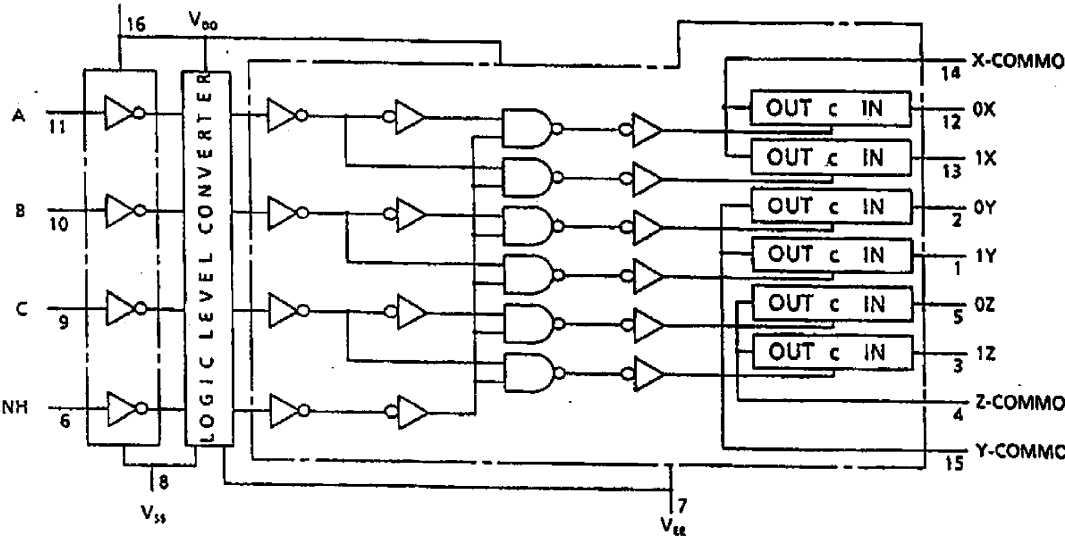
16
V_{DD}
A
11
B
10
C
9
INH
6
LOGIC LEVEL CONVERTER
8
V_{SS}
7
V_{EE}
OUT c IN
X-COMMON
14
0X
12
1X
13
0Y
2
1Y
1
0Z
5
1Z
3
Z-COMMON
4
Y-COMMON
15

IC1106
TC7W240FU

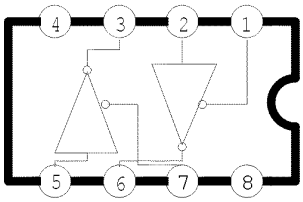

IC702
TA75S393F

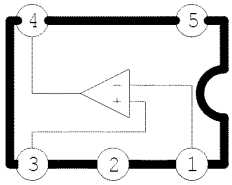

IC701
TA75W393FU

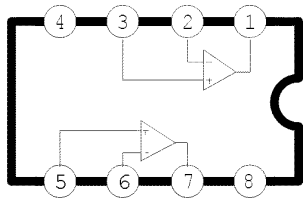

IC904
TA75W558FU

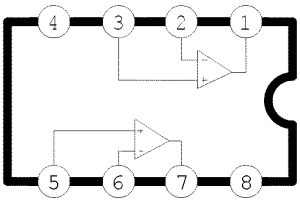

IC905
INZ1

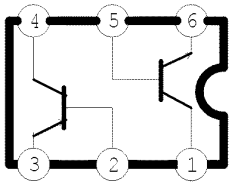

IC906
INZ1

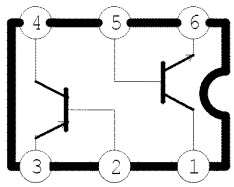

IC1108
TC7W14FU

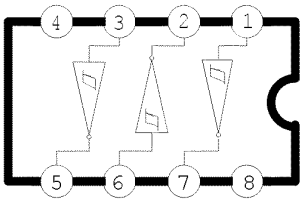

IC902
NJM2107F

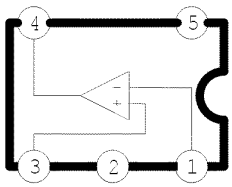

IC806
FMC4AT108

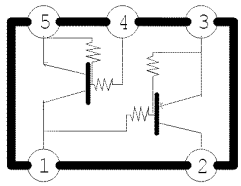

TA1107
TA75S393F

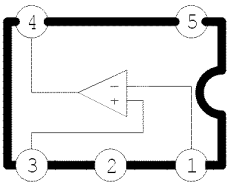

1R3Y26A1

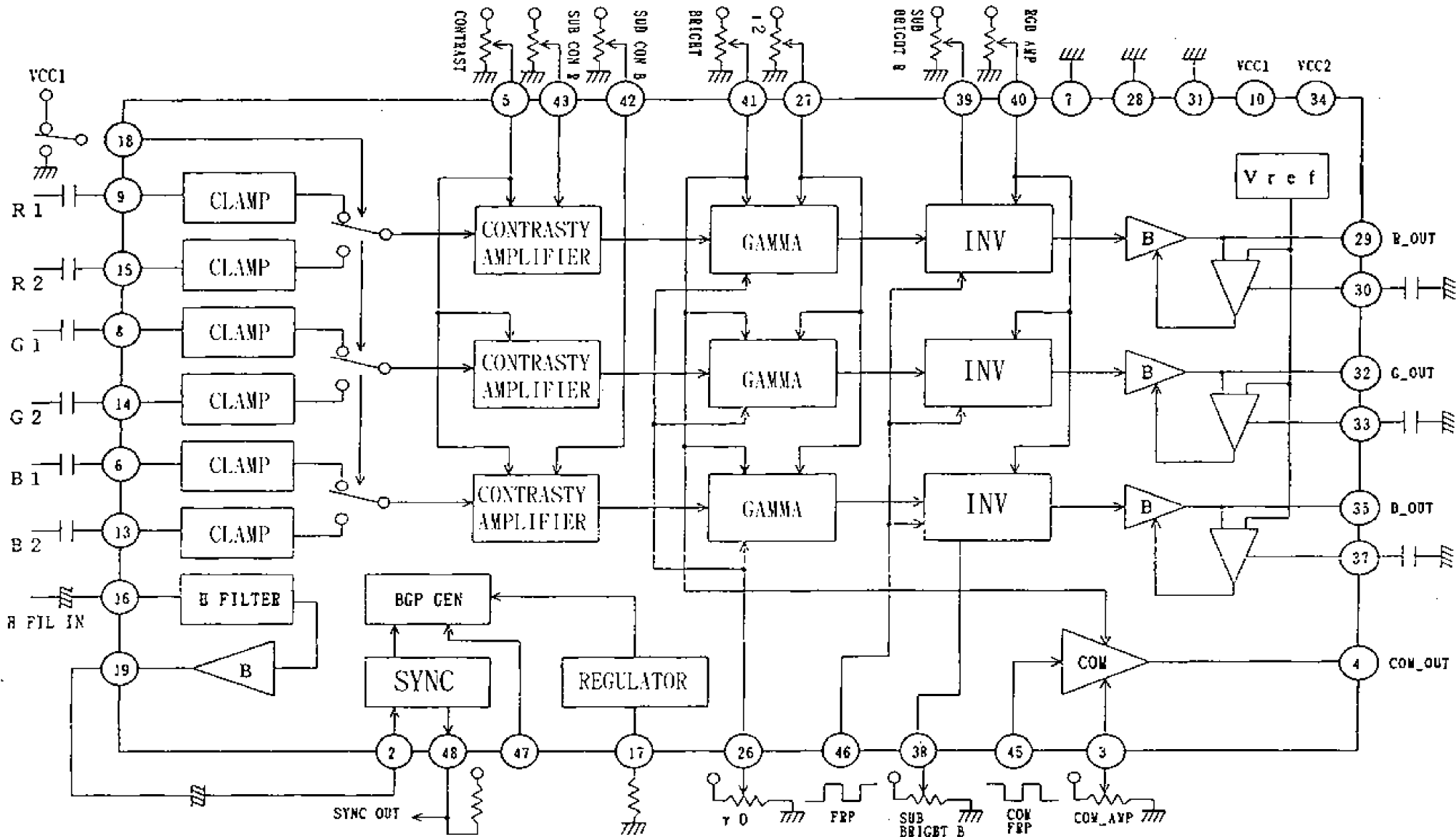
VCC1
CONTRAST
SUB CON R
SUB CON B
BRIGHT
I2
SUB BRIGHT B
RGB AMP
VCC1
VCC2
R 1
R 2
G 1
G 2
B 1
B 2
B FIL IN
CLAMP
CONTRASTY AMPLIFIER
GAMMA
INV
B
Vref
B FILTER
BGP GEN
SYNC
REGULATOR
COM
R_OUT
G_OUT
B_OUT
COM_OUT
SYNC OUT
γ 0
FRP
SUB BRIGHT B
COM FRP
COM_AMP

Note:

1. Be sure to make your order of replacement parts according to this list.
2. Important safty notice: Component , indentified by ⚠ mark have special characteristics important for safety. When replacing any of these components, use only manufacture's specified parts.
3. Location keys in the remarks column indicates the general location of the parts shown in the exploded drawing, as in a road map.
4. The marking (RTL) indicates that Retention Time is limited for this item. After the discontinuation of assembly in production , the item will continue to be available for a specific period of time. The retention period of availability is dependent on the type of assembly , and in accordance with the laws governing part and product retention. After the end of this period, the assembly will no longer be available.
5. "T" marks in remarks column are indicated supply parts of TMACO.

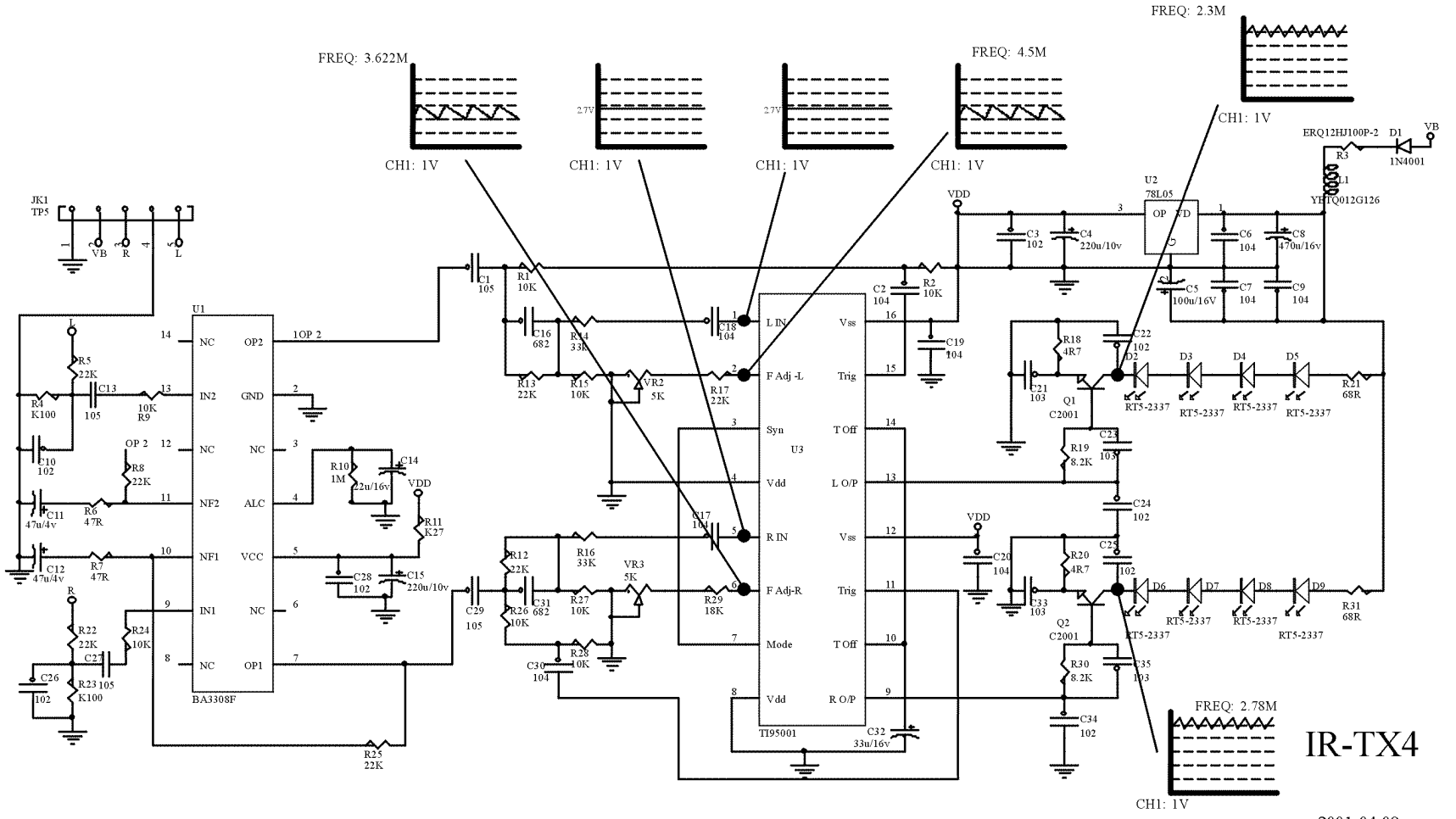
FREQ: 3.622M
CH1: 1V
FREQ: 4.5M
FREQ: 2.3M
FREQ: 2.78M
JK1
TP5
VB
R
L
U1
BA3308F
NC
OP2
IN2
GND
NF2
ALC
NF1
VCC
IN1
OP1
U3
TI95001
L IN
F Adj -L
Syn
Vdd
R IN
F Adj-R
Mode
Vss
Trig
T Off
L O/P
R O/P
U2
78L05
OP
VD
ERQ12HJ100P-2
D1
1N4001
L1
YHTQ012G126
RT5-2337
Q1
C2001
Q2
C2001
IR-TX4
2001 04 09...
Pro2 FM Stereo Transmitter

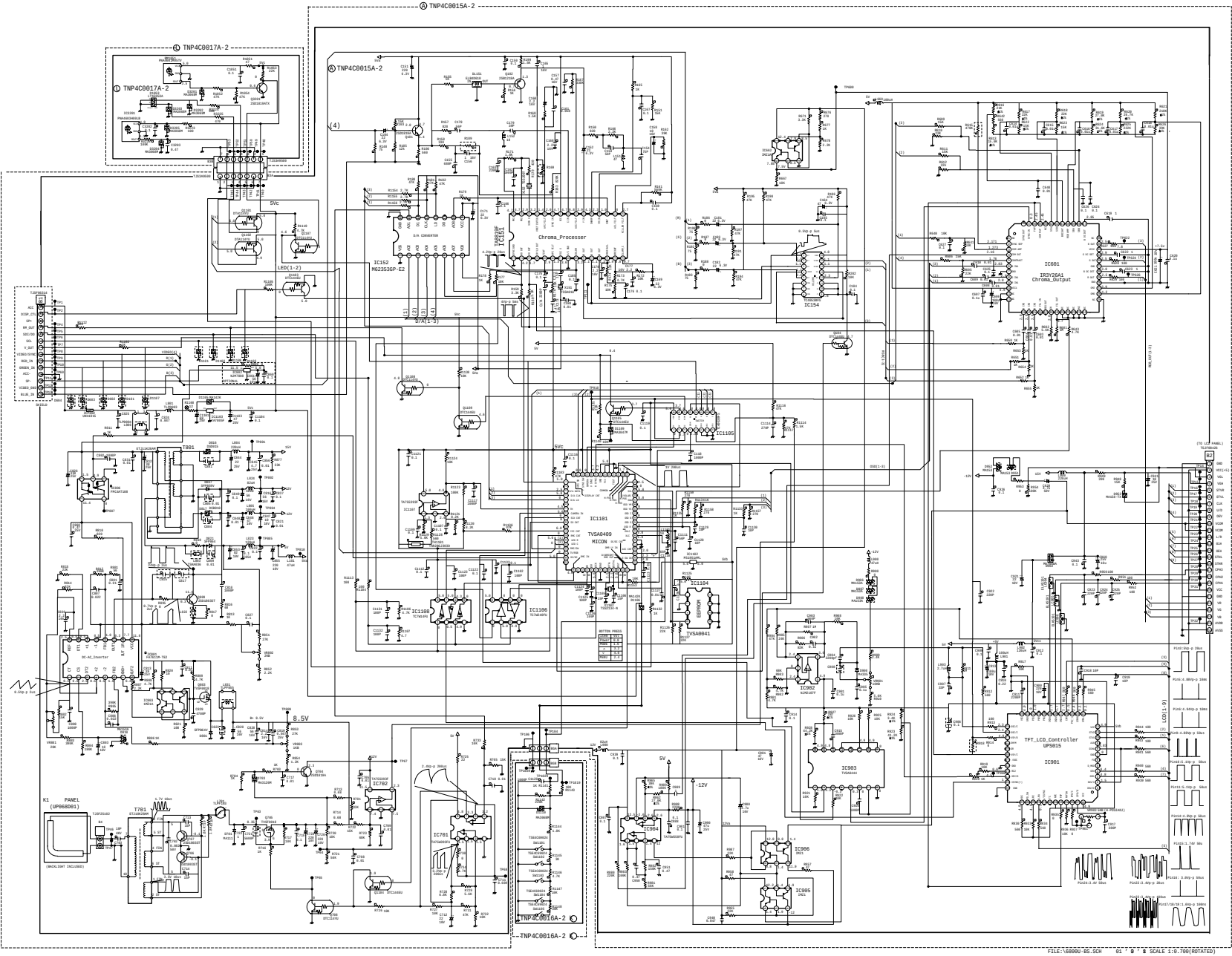
TNP4C0015A-2
TNP4C0017A-2
TNP4C0016A-2
Chroma_Processer
IC151
TA8391F
IC152
M62353GP-E2
D/A CONVERTER
IC154
IC601
IR3Y26A1
Chroma_Output
IC1101
TVSA0409
MICON
IC1104
EEPROM
TVSA0041
IC1105
IC1106
TC7W14FU
IC902
IC903
IC904
IC906
IC905
TFT_LCD_Controller
UPS015
IC901
LCD(1-9)
(TO LCD PANEL)
TB801
TB802
IC702
IC701
TA7630SP
K1 PANEL
(UP06B001)
(BACKLIGHT INCLUDED)
T701
DC-AC_Inverter
8.5V
5V
-12V
SVC
LED(1-2)
D/A(1-3)
BUTTON PRESS
KEY1 0-1
KEY2 1-2
KEY3 2-3
KEY4 3-4
KEY5 4-5
FILE:\B800/BS.SCH
81 " 9 " 8 SCALE 1:0.700(ROTATED)

TNP4C0044

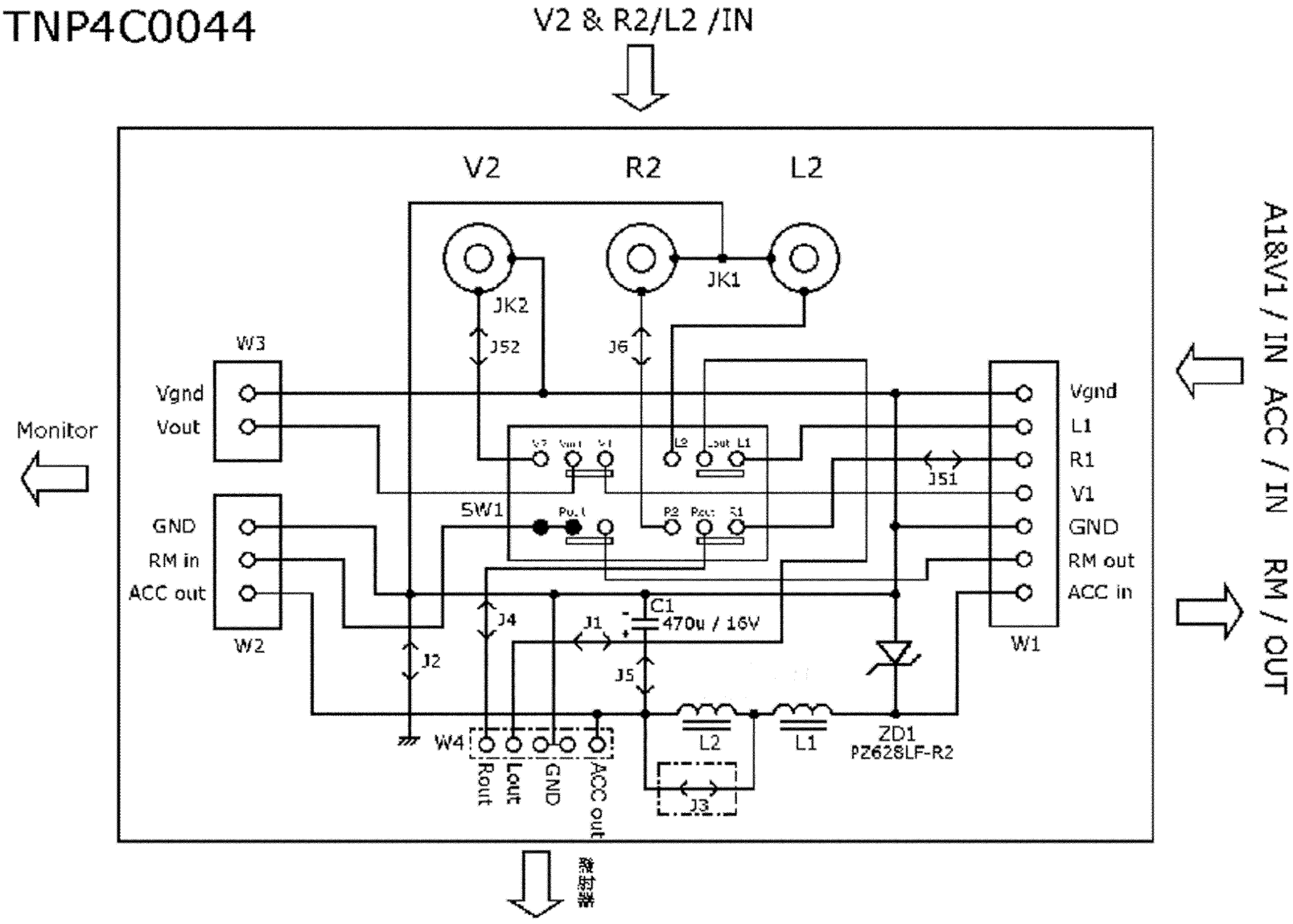
V2 & R2/L2 /IN
A1&V1 / IN ACC / IN RM / OUT
Monitor
V2
R2
L2
JK1
JK2
J52
J6
W3
Vgnd
Vout
GND
RM in
ACC out
W2
SW1
J51
J4
J1
C1
470u / 16V
J2
J5
W4
Rout
Lout
GND
ACC out
L2
L1
J3
ZD1
PZ628LF-R2
W1
Vgnd
L1
R1
V1
GND
RM out
ACC in
電源

TNP4C0045

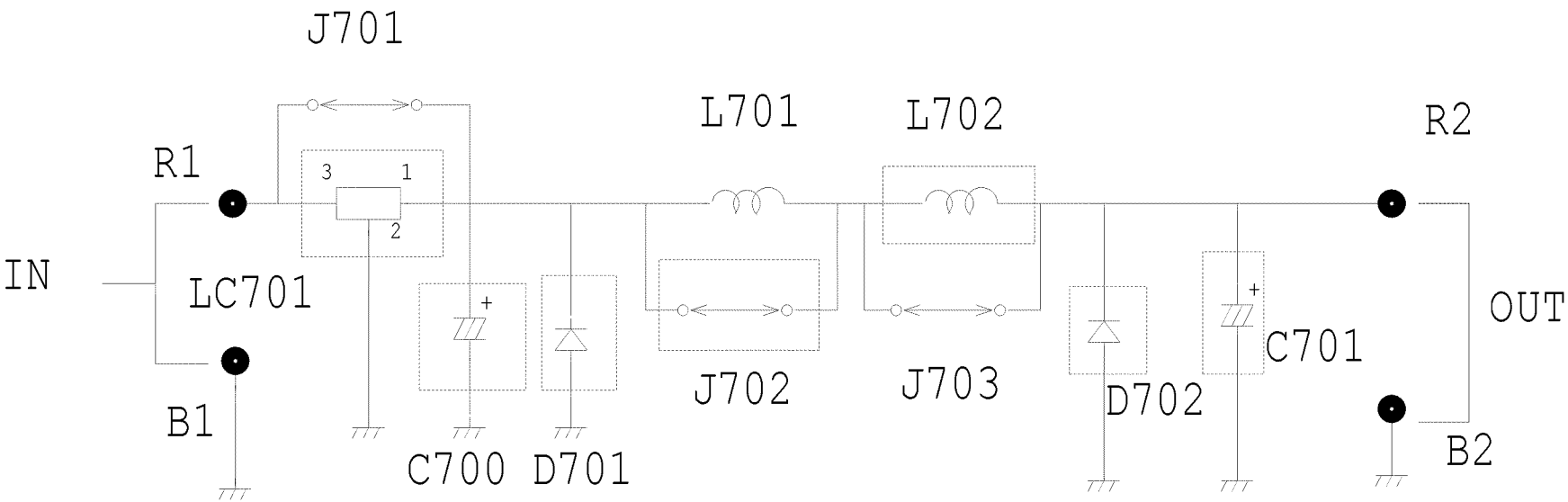
J701
R1
3
1
2
IN
LC701
B1
C700
D701
L701
L702
J702
J703
D702
C701
R2
OUT
B2

Specifications*

Overall System

Power supply :12V DC(10.8V-16V)
Test Voltage 13V,
Negative ground

Current consumption :Less than 1.0A

Usage Temperature Range :0℃ to +40℃

Storage Temperature range :-20℃ to +80℃

Display Unit

Liquid Crystal Panel :6.8"wide

Screen dimensions :With 140mm(5-1/2")
Height 105mm(2-1/8")
Diagonal 175mm(6-13/16")

Number of Pixels :269,568 pixels

Display Method :Transparent color filter format

Drive Method :TFT(Thin Film Transistor)

Light Soure :internal light (U-shaped, color cathode fluorescent light)

Sound Output System :wireless earphone

connection Terminals :Power,DC 12V (12V STD.)
Power ground
Remote out(RCApin)
LAMP DC 12V power
LAMP DC 12 ground (Door)
LAMP DC 12 ground (Battery)
AV input VTR1 and input VTR2 terminals
VTR1: Video 1Vp-p(75Ω/RCA pin)
Audio 0.5Vrms(RCA pin)(R/L)
Video 1Vp-p(75Ω/RCA pin)
VTR2: Audio 0.5Vrms(RCA pin)(R/L)
※ ON THE BODY

Dimensions**(W×H×D)

Display Unit :347×212×63(mm)
(13-11/16"×8-5/16"×2-7/16")

Weight**

Display Unit :5 lb.7 oz.(2.47kg)

*Specifications and the design are subject to possible modification without notice due to improvements.

**Dimensions and weight shown are approximate.

***Above specifications comply with EIA stansards.

TNP4C0015 ②

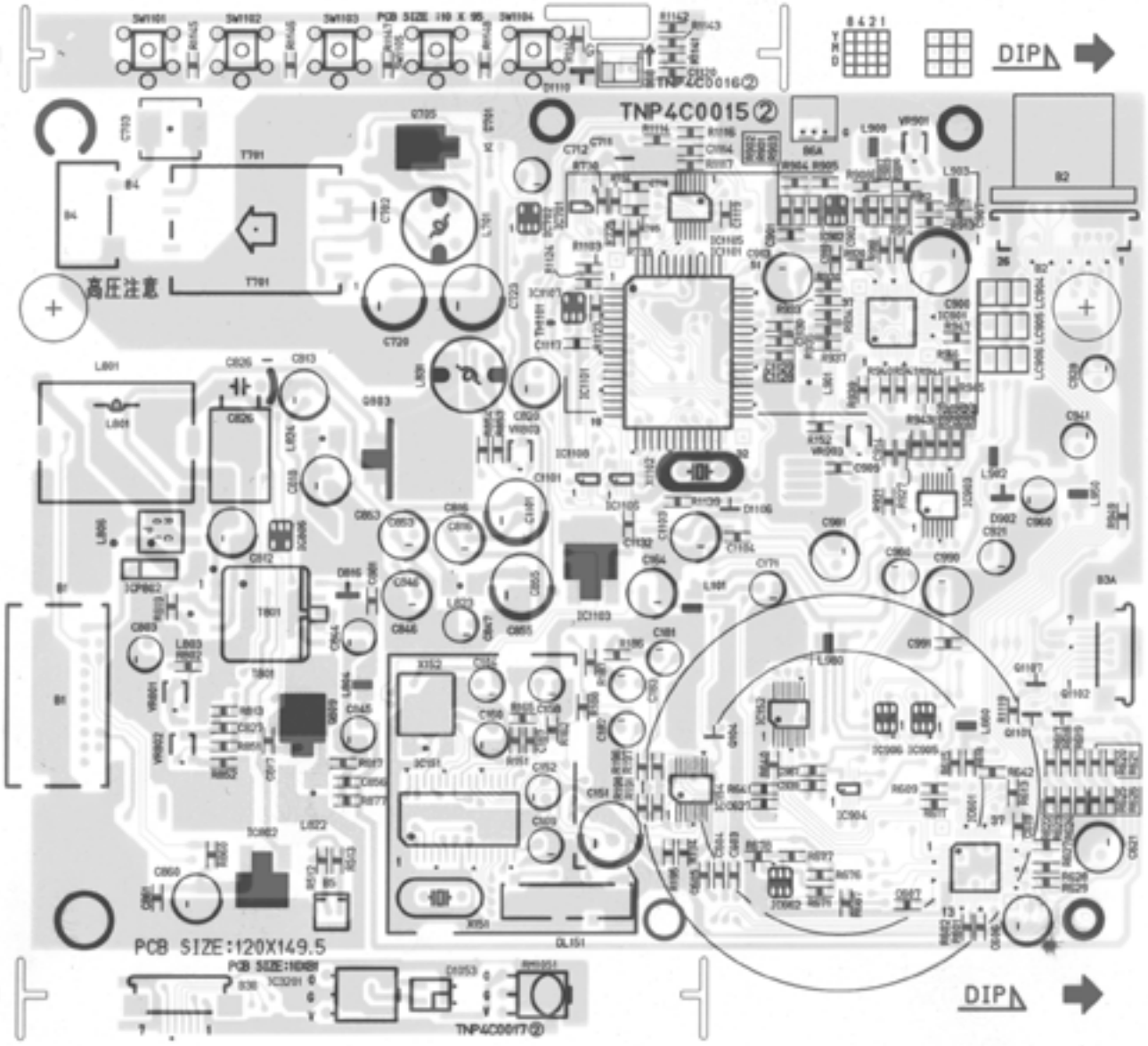

TNP4C0015 ② PCB SIZE : 162X170

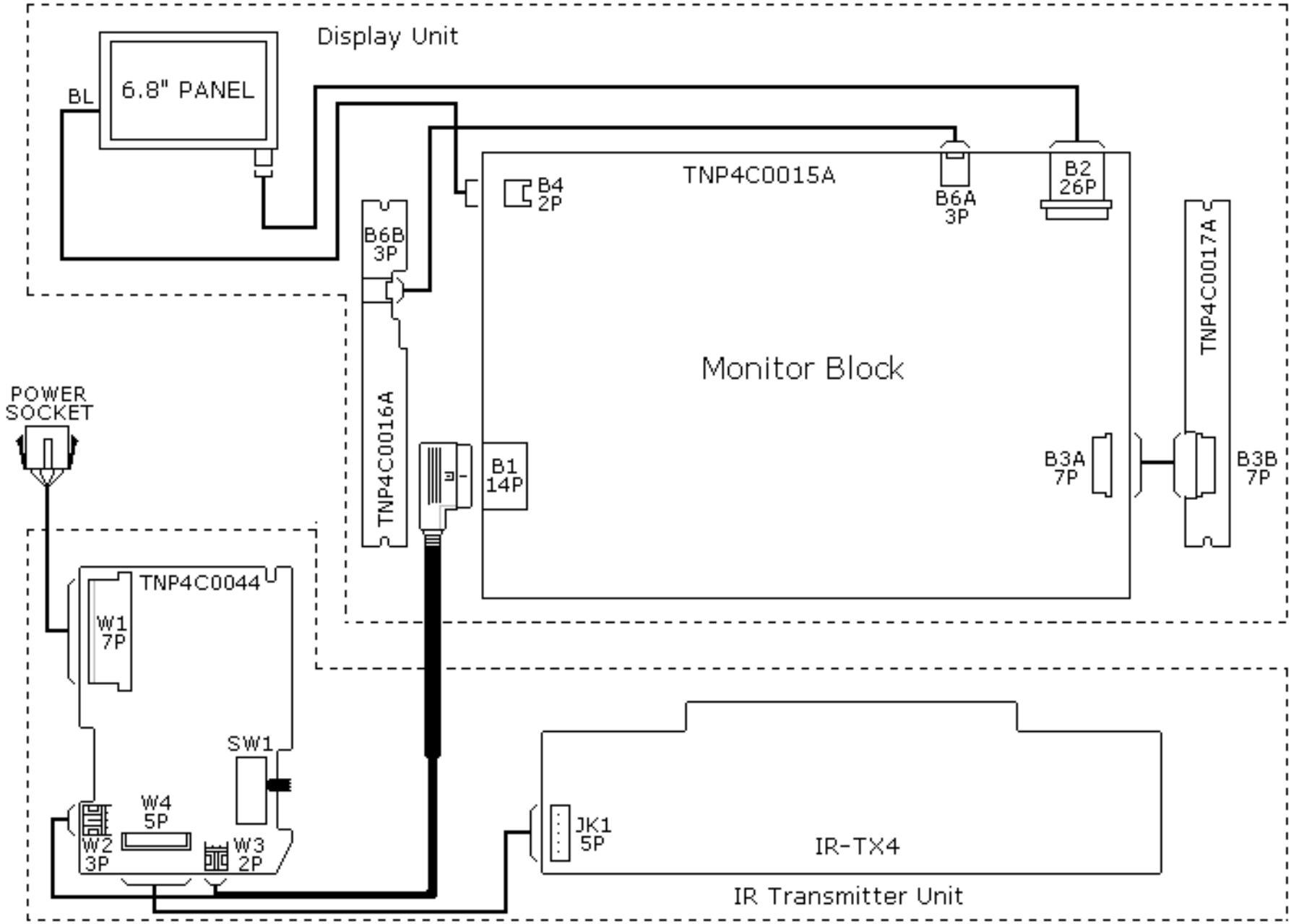
Display Unit
6.8" PANEL
BL
TNP4C0015A
B4
2P
B6A
3P
B2
26P
B6B
3P
TNP4C0017A
Monitor Block
TNP4C0016A
B1
14P
B3A
7P
B3B
7P
POWER
SOCKET
TNP4C0044
W1
7P
SW1
W4
5P
W2
3P
W3
2P
JK1
5P
IR-TX4
IR Transmitter Unit

CAR IR-TX1
2001 03 05.
U1
BA3308F
R10 1M
C28 102
C29 105
R22 22K
R27 22K
R26 10K
R28 10K
R16 33K
C31 104
C12 104
R29 10K
C20 104
C30 104
R20 102
C31 104
R30 33K
IC2 C34
IC3 C35
R19 22K
C23 102
C24 102
C25 102
C19 104
R18 22K
C21 103
C22 102
R7 22K
VR2 5K
C18 104
R4 33K
R3 22K
R2 10K
R1 10K
C2 104
C1 105
C6 102
VR3 5K
C3 102
R9 10K
R10 10K
R11 10K
C13 105
R12 10K
R24 10K
C22 105
R25 22K
R23 10K
C26 102
R6 22K
R23 10K
R22 22K
C7 102
C9 104

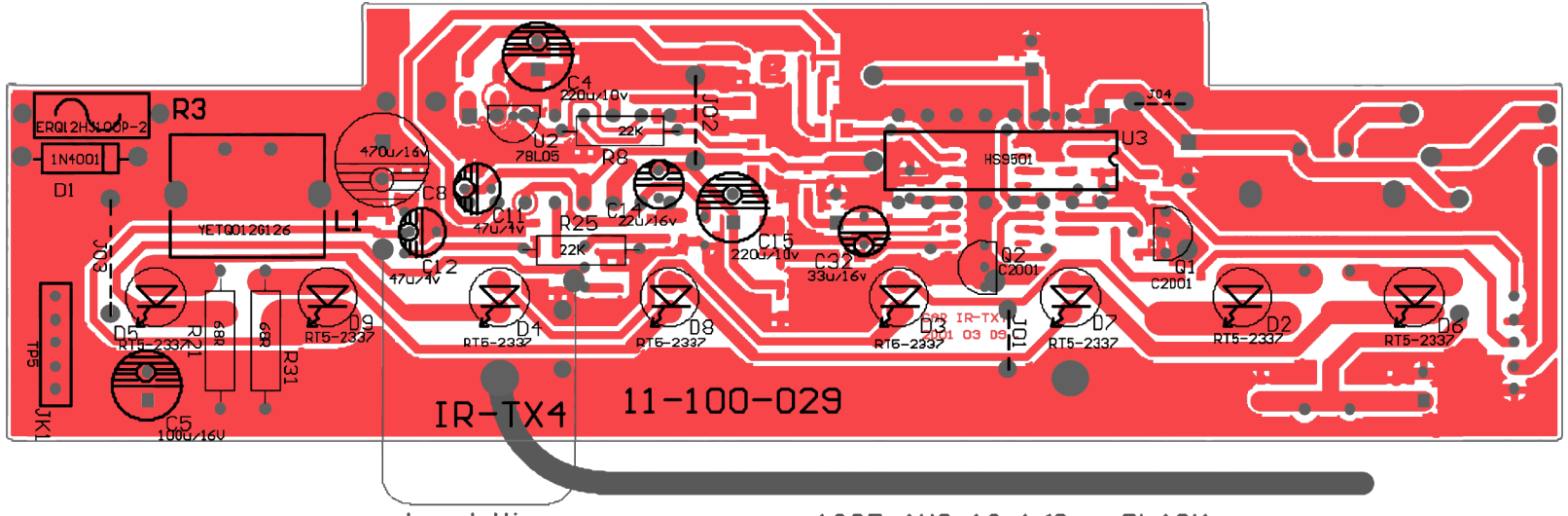
R3
ERQ12HJ100P-2
1N4001
D1
YETQ0126126
L1
470u/16v
C8
C11
47u/4v
C12
47u/4v
C4
220u/10v
U2
78L05
R8
22K
R25
22K
C1
22u/16v
C15
220u/10v
C32
33u/16v
U3
HS9501
J04
Q2
C2001
Q1
C2001
D5
RT5-2337
R31
68R
R31
68R
D9
RT5-2337
D4
RT5-2337
D8
RT5-2337
D3
RT5-2337
D7
RT5-2337
D2
RT5-2337
D6
RT5-2337
TP5
JK1
C5
100u/16V
IR-TX4
11-100-029
Lead Wire
50mm
1007 AWG-18 160mm BLACK

[TNP4C0016A]
[Bottom View]

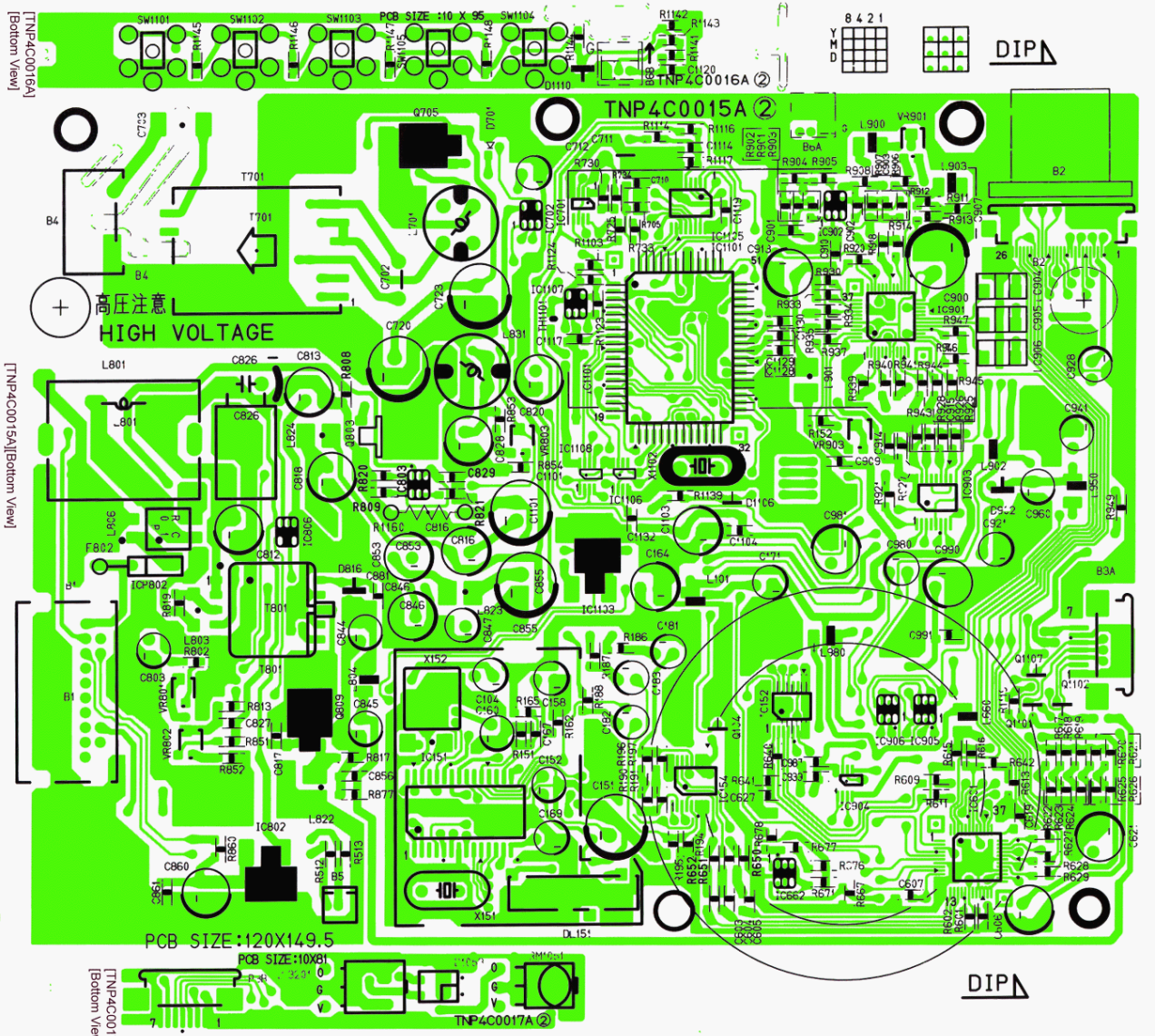

[TNP4C0015A][Bottom View]

[TNP4C0017A]
[Bottom View]

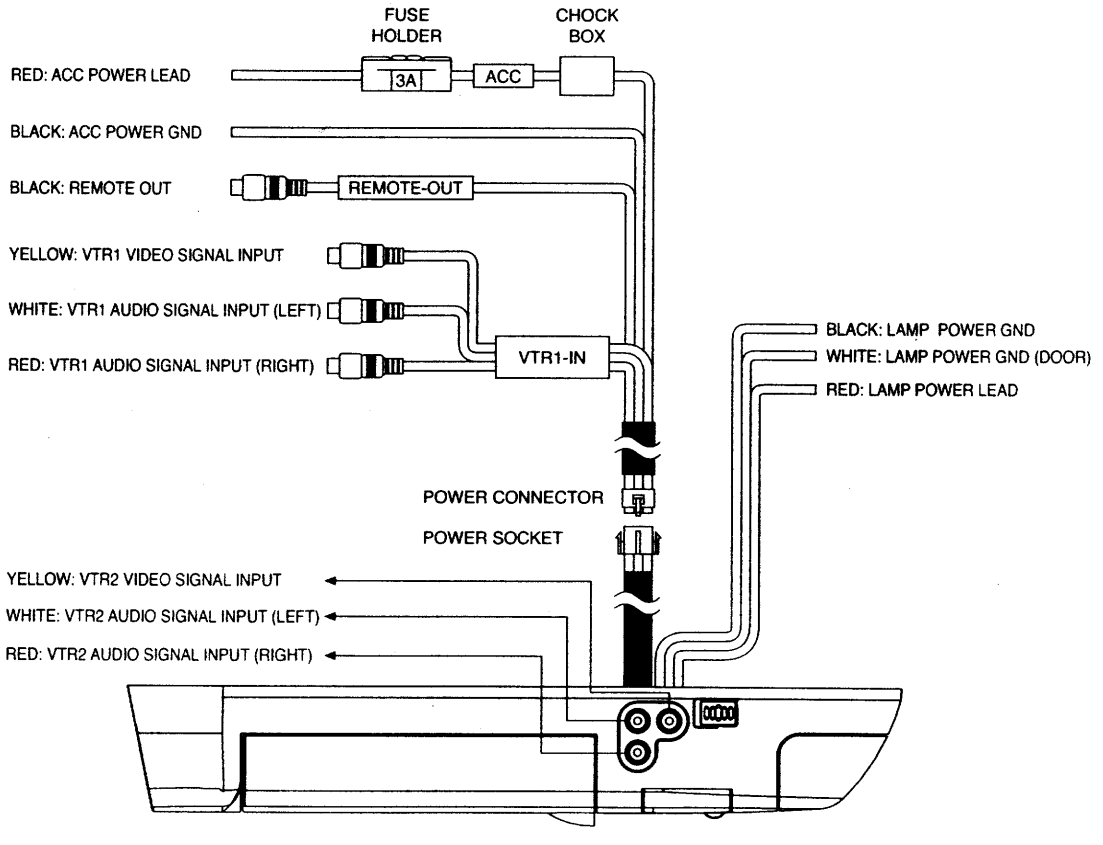
FUSE HOLDER
CHOCK BOX
RED: ACC POWER LEAD
3A
ACC
BLACK: ACC POWER GND
BLACK: REMOTE OUT
REMOTE-OUT
YELLOW: VTR1 VIDEO SIGNAL INPUT
WHITE: VTR1 AUDIO SIGNAL INPUT (LEFT)
RED: VTR1 AUDIO SIGNAL INPUT (RIGHT)
VTR1-IN
BLACK: LAMP POWER GND
WHITE: LAMP POWER GND (DOOR)
RED: LAMP POWER LEAD
POWER CONNECTOR
POWER SOCKET
YELLOW: VTR2 VIDEO SIGNAL INPUT
WHITE: VTR2 AUDIO SIGNAL INPUT (LEFT)
RED: VTR2 AUDIO SIGNAL INPUT (RIGHT)

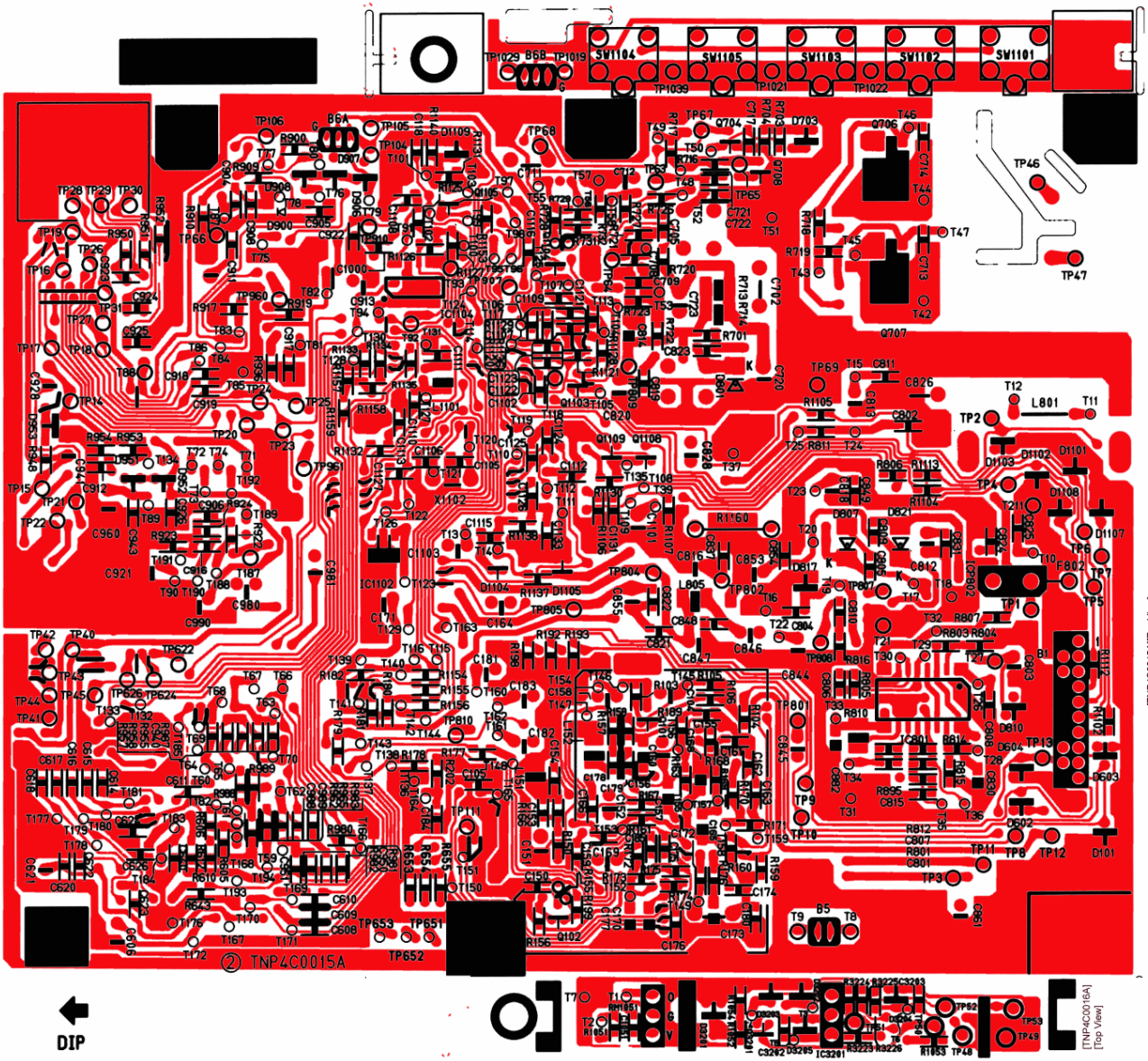
[TNP4C0017A]
[Top View]
[TNP4C0015A][Top View]
[TNP4C0016A]
[Top View]
② TNP4C0015A
DIP

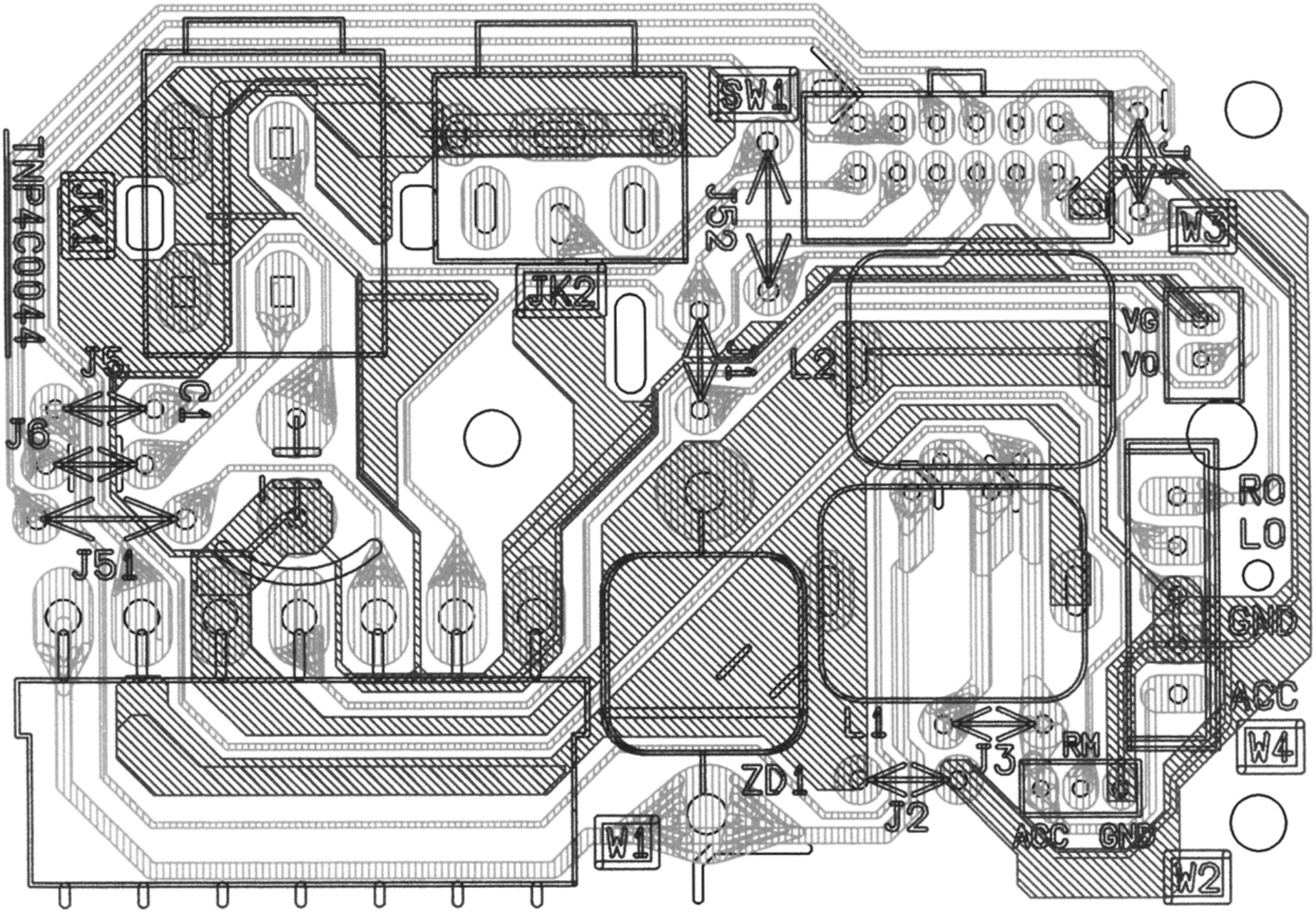
TNP4C0044
JK1
JK2
SW1
J52
W3
VG
VO
L2
J5
C2
J6
J51
RO
LO
GND
ACC
W4
L1
J3
RM
ZD1
J2
ACC
GND
W1
W2

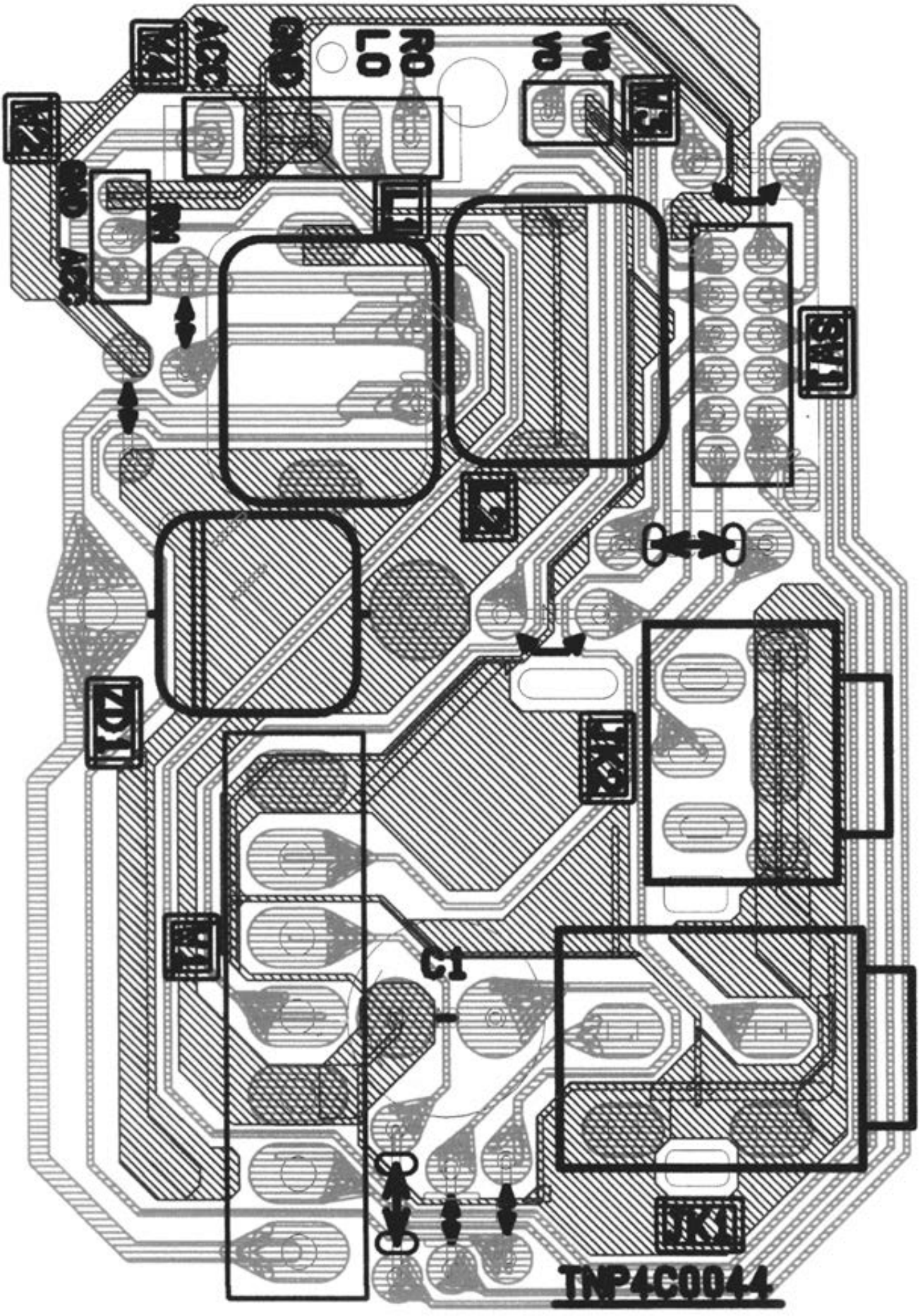
C1
TNP4C0044

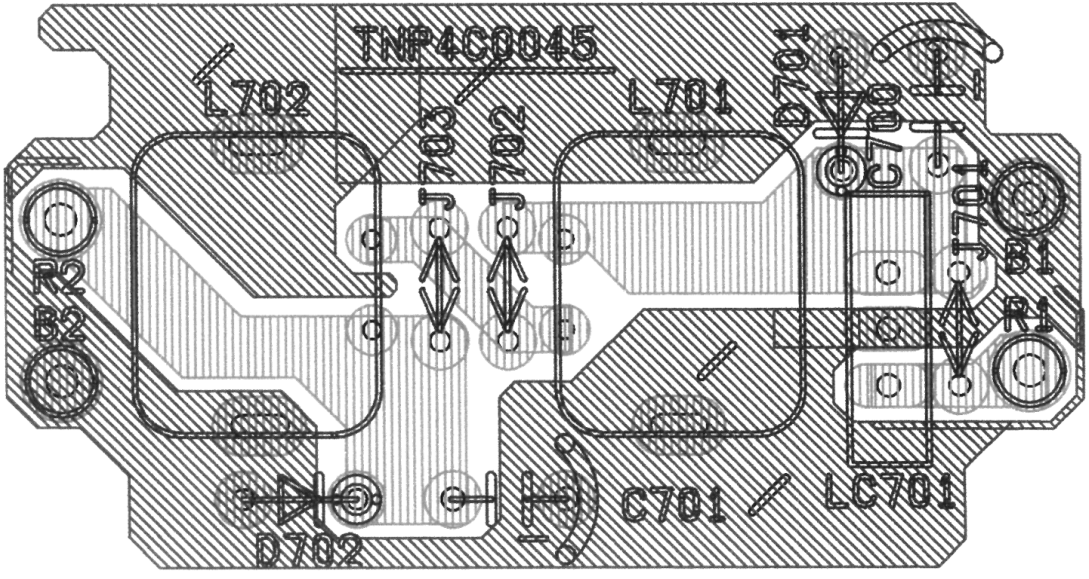
TNP4C0045
L702
L701
D701
C703
J703
J702
J701
B1
R1
R2
B2
D702
C701
LC701

LC701
C700
D701
TNPC0045
L702
C701
D702