Panasonic
Panasonic

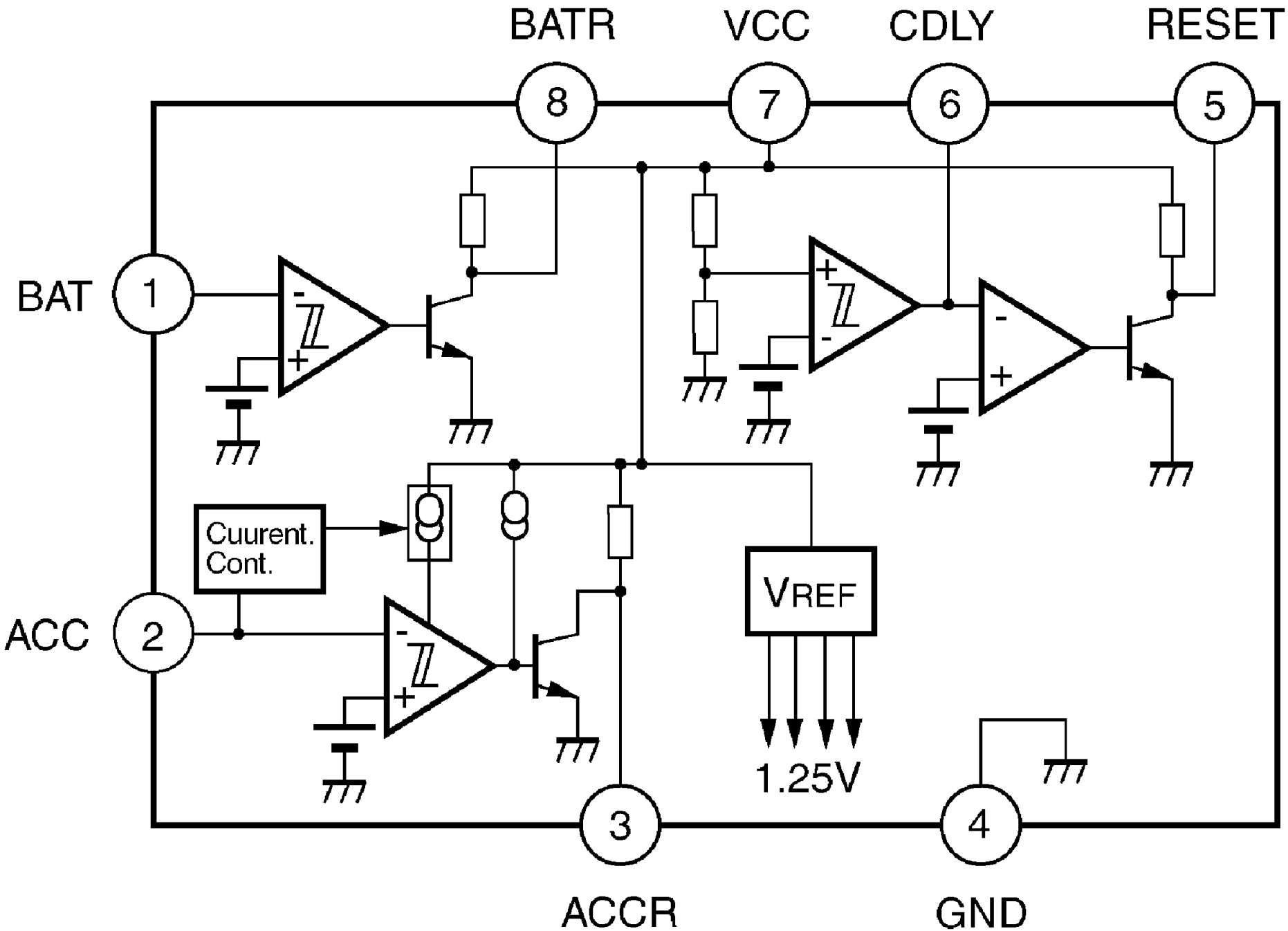
BATR
VCC
CDLY
RESET
8
7
6
5
BAT
1
Cuurent.
Cont.
VREF
ACC
2
1.25V
3
4
ACCR
GND

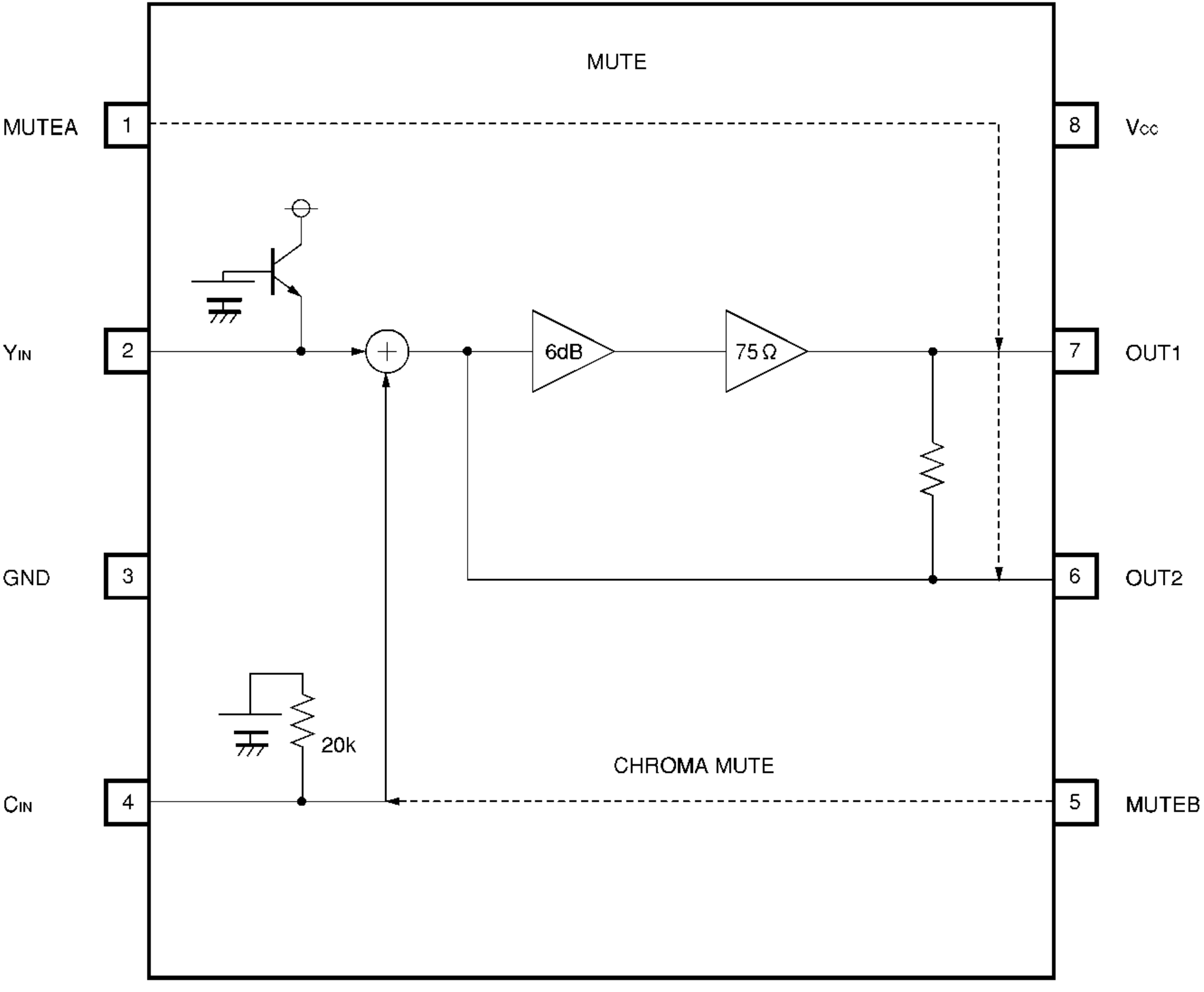
MUTE
MUTEA
1
8
Vcc
YIN
2
6dB
75 Ω
7
OUT1
GND
3
6
OUT2
20k
CHROMA MUTE
CIN
4
5
MUTEB

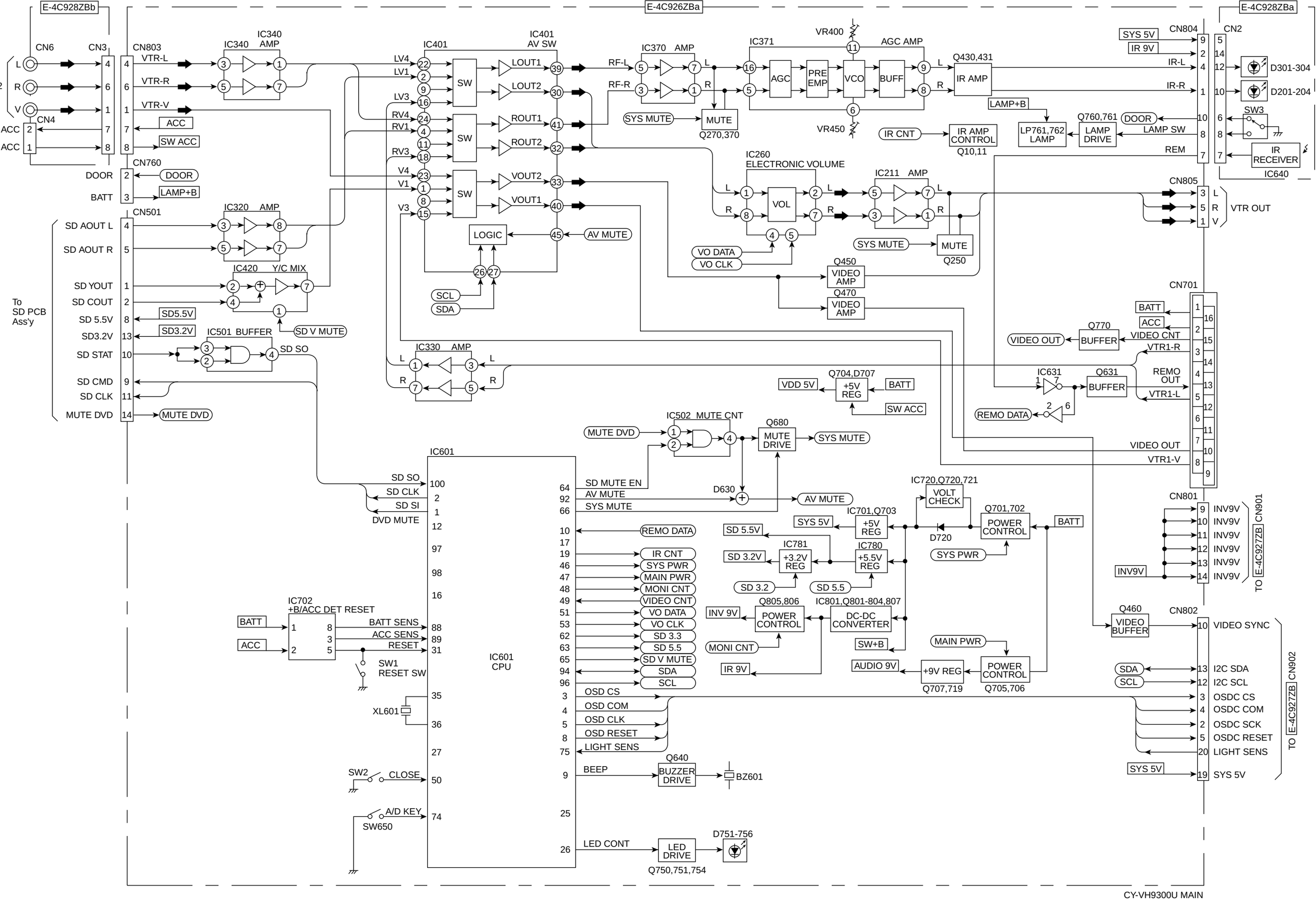
E-4C928ZBb
E-4C926ZBa
E-4C928ZBa
CN6
CN3
VTR2
L
R
V
CN4
ACC
SW ACC
CN803
VTR-L
VTR-R
VTR-V
ACC
SW ACC
CN760
DOOR
BATT
DOOR
LAMP+B
IC340 AMP
IC340
IC401
IC401
AV SW
LV4
LV1
LV3
RV4
RV1
RV3
V4
V1
V3
SW
LOUT1
LOUT2
ROUT1
ROUT2
VOUT2
VOUT1
LOGIC
AV MUTE
SCL
SDA
IC370 AMP
RF-L
RF-R
SYS MUTE
MUTE
Q270,370
IC371
AGC
PRE EMP
VCO
BUFF
VR400
VR450
AGC AMP
Q430,431
IR AMP
LAMP+B
IR CNT
IR AMP CONTROL
Q10,11
LP761,762 LAMP
Q760,761
LAMP DRIVE
DOOR
LAMP SW
REM
CN804
SYS 5V
IR 9V
IR-L
IR-R
CN2
D301-304
D201-204
SW3
IR RECEIVER
IC640
IC260
ELECTRONIC VOLUME
VOL
VO DATA
VO CLK
IC211 AMP
SYS MUTE
MUTE
Q250
CN805
VTR OUT
Q450
VIDEO AMP
Q470
VIDEO AMP
CN501
SD AOUT L
SD AOUT R
IC320 AMP
IC420 Y/C MIX
SD YOUT
SD COUT
SD 5.5V
SD3.2V
SD STAT
SD CMD
SD CLK
MUTE DVD
SD5.5V
SD3.2V
SD V MUTE
IC501 BUFFER
SD SO
To SD PCB Ass'y
IC330 AMP
CN701
BATT
ACC
VIDEO CNT
VTR1-R
VTR1-L
VIDEO OUT
VTR1-V
Q770
BUFFER
VIDEO OUT
IC631
Q631
BUFFER
REMO OUT
REMO DATA
Q704,D707
+5V REG
VDD 5V
BATT
SW ACC
IC502 MUTE CNT
MUTE DVD
Q680
MUTE DRIVE
SYS MUTE
IC601
SD SO
SD CLK
SD SI
DVD MUTE
SD MUTE EN
AV MUTE
SYS MUTE
D630
AV MUTE
REMO DATA
IR CNT
SYS PWR
MAIN PWR
MONI CNT
VIDEO CNT
VO DATA
VO CLK
SD 3.3
SD 5.5
SD V MUTE
SDA
SCL
OSD CS
OSD COM
OSD CLK
OSD RESET
LIGHT SENS
BEEP
Q640
BUZZER DRIVE
BZ601
LED CONT
LED DRIVE
Q750,751,754
D751-756
IC601
CPU
IC702
+B/ACC DET RESET
BATT
ACC
BATT SENS
ACC SENS
RESET
SW1
RESET SW
XL601
SW2
CLOSE
A/D KEY
SW650
IC720,Q720,721
VOLT CHECK
D720
IC701,Q703
+5V REG
SYS 5V
Q701,702
POWER CONTROL
BATT
SYS PWR
SD 5.5V
IC781
+3.2V REG
SD 3.2V
IC780
+5.5V REG
SD 3.2
SD 5.5
Q805,806
POWER CONTROL
INV 9V
IC801,Q801-804,807
DC-DC CONVERTER
SW+B
MONI CNT
IR 9V
MAIN PWR
AUDIO 9V
+9V REG
Q707,719
POWER CONTROL
Q705,706
CN801
INV9V
TO E-4C927ZB CN901
Q460
VIDEO BUFFER
CN802
VIDEO SYNC
I2C SDA
I2C SCL
OSDC CS
OSDC COM
OSDC SCK
OSDC RESET
LIGHT SENS
SYS 5V
TO E-4C927ZB CN902

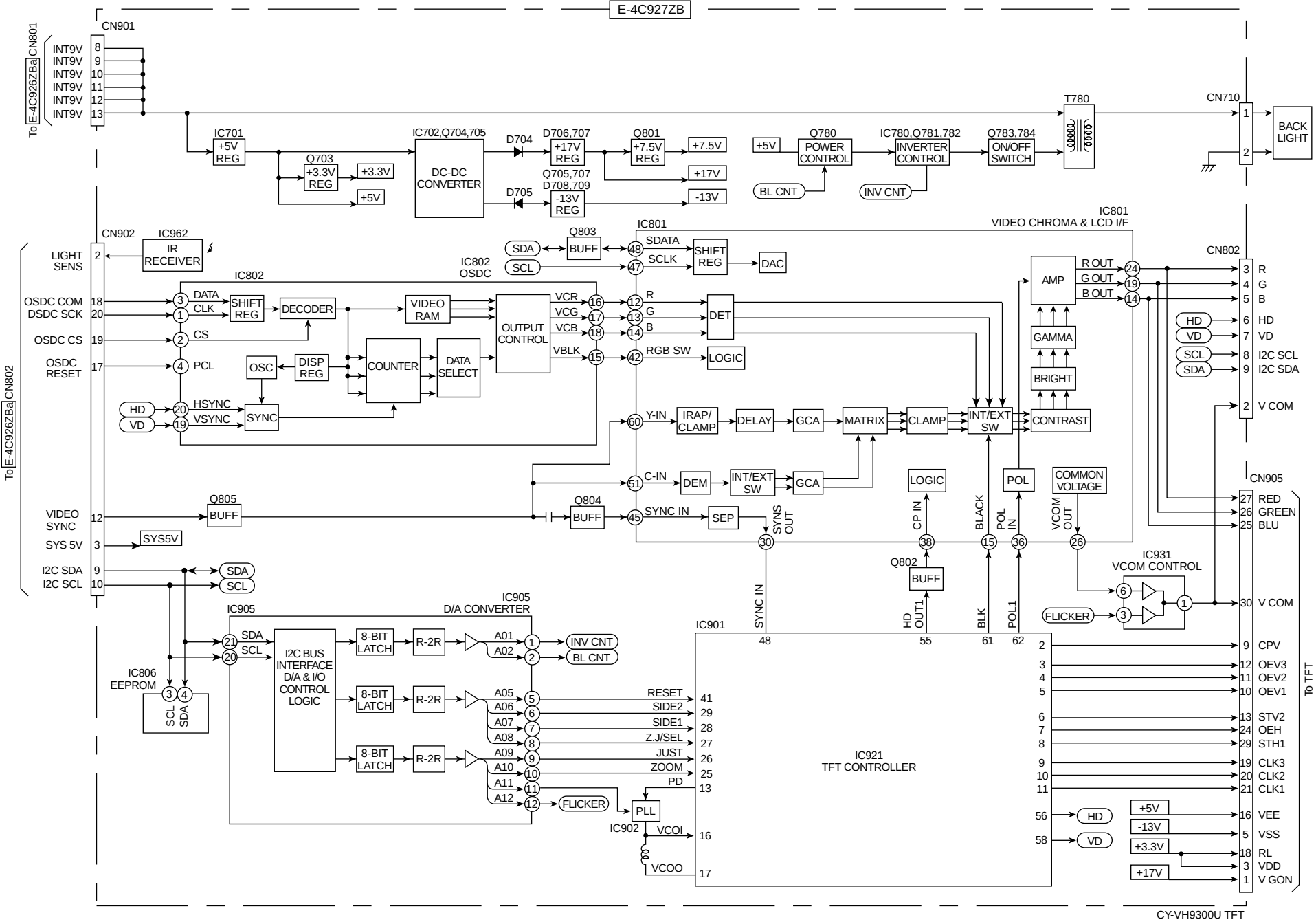
E-4C927ZB
CN901
To E-4C926ZBa CN801
INT9V
IC701
+5V REG
Q703
+3.3V REG
+3.3V
+5V
IC702,Q704,705
DC-DC CONVERTER
D704
D705
D706,707
+17V REG
Q705,707
D708,709
-13V REG
Q801
+7.5V REG
+7.5V
+17V
-13V
+5V
Q780
POWER CONTROL
BL CNT
IC780,Q781,782
INVERTER CONTROL
INV CNT
Q783,784
ON/OFF SWITCH
T780
CN710
BACK LIGHT
CN902
LIGHT SENS
IC962
IR RECEIVER
OSDC COM
DSDC SCK
OSDC CS
OSDC RESET
IC802
OSDC
DATA
CLK
SHIFT REG
DECODER
CS
PCL
OSC
DISP REG
COUNTER
DATA SELECT
VIDEO RAM
OUTPUT CONTROL
VCR
VCG
VCB
VBLK
HD
VD
HSYNC
VSYNC
SYNC
IC801
Q803
BUFF
SDA
SCL
SDATA
SCLK
SHIFT REG
DAC
R
G
B
RGB SW
DET
LOGIC
IC801
VIDEO CHROMA & LCD I/F
AMP
R OUT
G OUT
B OUT
GAMMA
BRIGHT
CONTRAST
INT/EXT SW
CLAMP
MATRIX
GCA
DELAY
IRAP/ CLAMP
Y-IN
C-IN
DEM
INT/EXT SW
GCA
SEP
SYNC IN
SYNS OUT
Q804
BUFF
Q805
BUFF
VIDEO SYNC
SYS 5V
SYS5V
I2C SDA
I2C SCL
CN802
R
G
B
HD
VD
I2C SCL
I2C SDA
V COM
CN905
RED
GREEN
BLU
V COM
CPV
OEV3
OEV2
OEV1
STV2
OEH
STH1
CLK3
CLK2
CLK1
VEE
VSS
RL
VDD
V GON
To TFT
LOGIC
CP IN
BLACK
POL IN
POL
COMMON VOLTAGE
VCOM OUT
Q802
BUFF
HD OUT1
BLK
POL1
IC931
VCOM CONTROL
FLICKER
IC905
D/A CONVERTER
I2C BUS INTERFACE D/A & I/O CONTROL LOGIC
8-BIT LATCH
R-2R
A01
A02
A05
A06
A07
A08
A09
A10
A11
A12
INV CNT
BL CNT
RESET
SIDE2
SIDE1
Z.J/SEL
JUST
ZOOM
PD
FLICKER
IC806
EEPROM
SCL
SDA
IC901
IC921
TFT CONTROLLER
IC902
PLL
VCOI
VCOO
+5V
-13V
+3.3V
+17V
CY-VH9300U TFT
Printed in Japan (K) 2004. 7 (Recycled Paper)

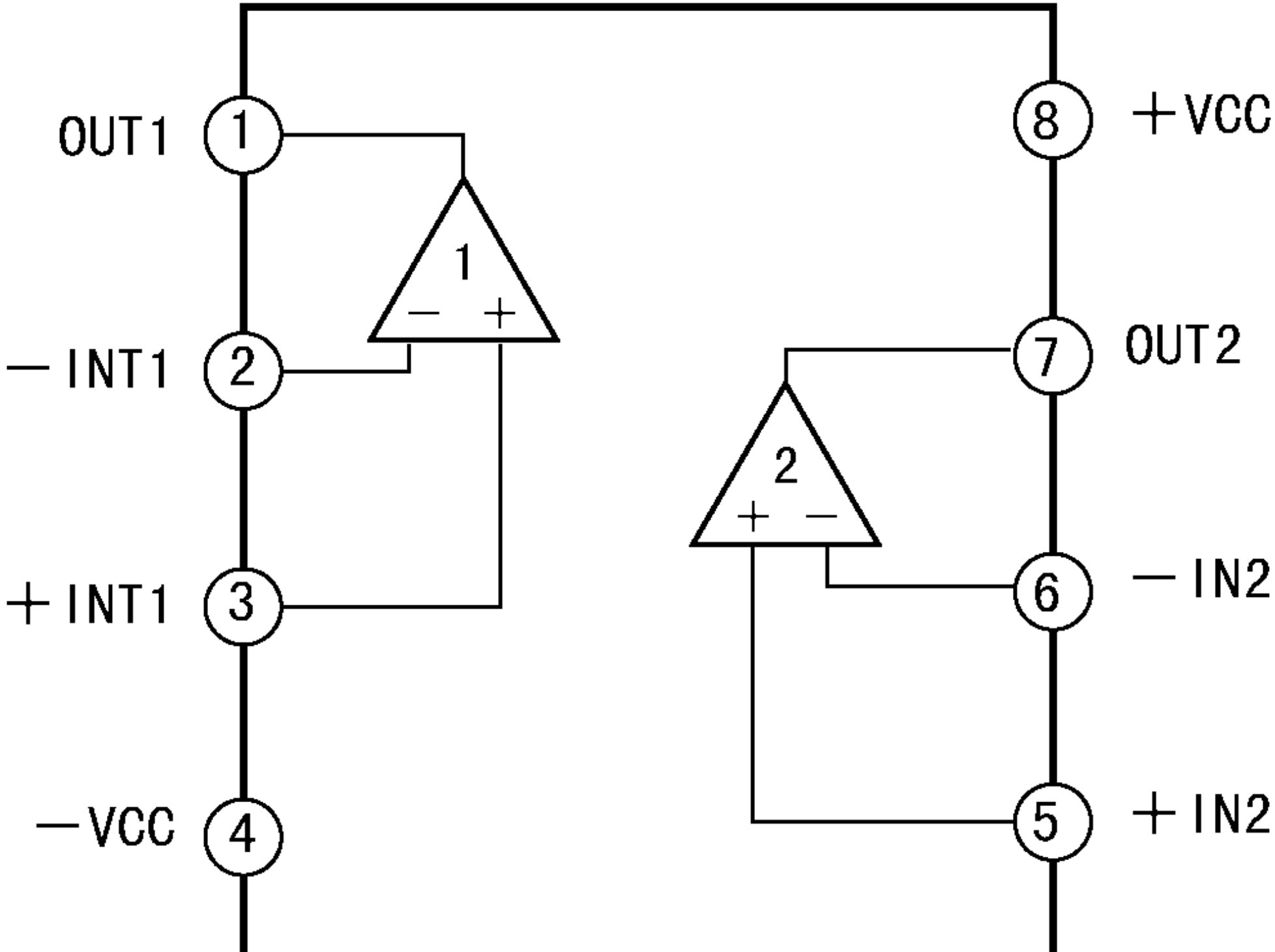
OUT1
1
−INT1
2
+INT1
3
−VCC
4
8
+VCC
7
OUT2
6
−IN2
5
+IN2
1
−
+
2
+
−

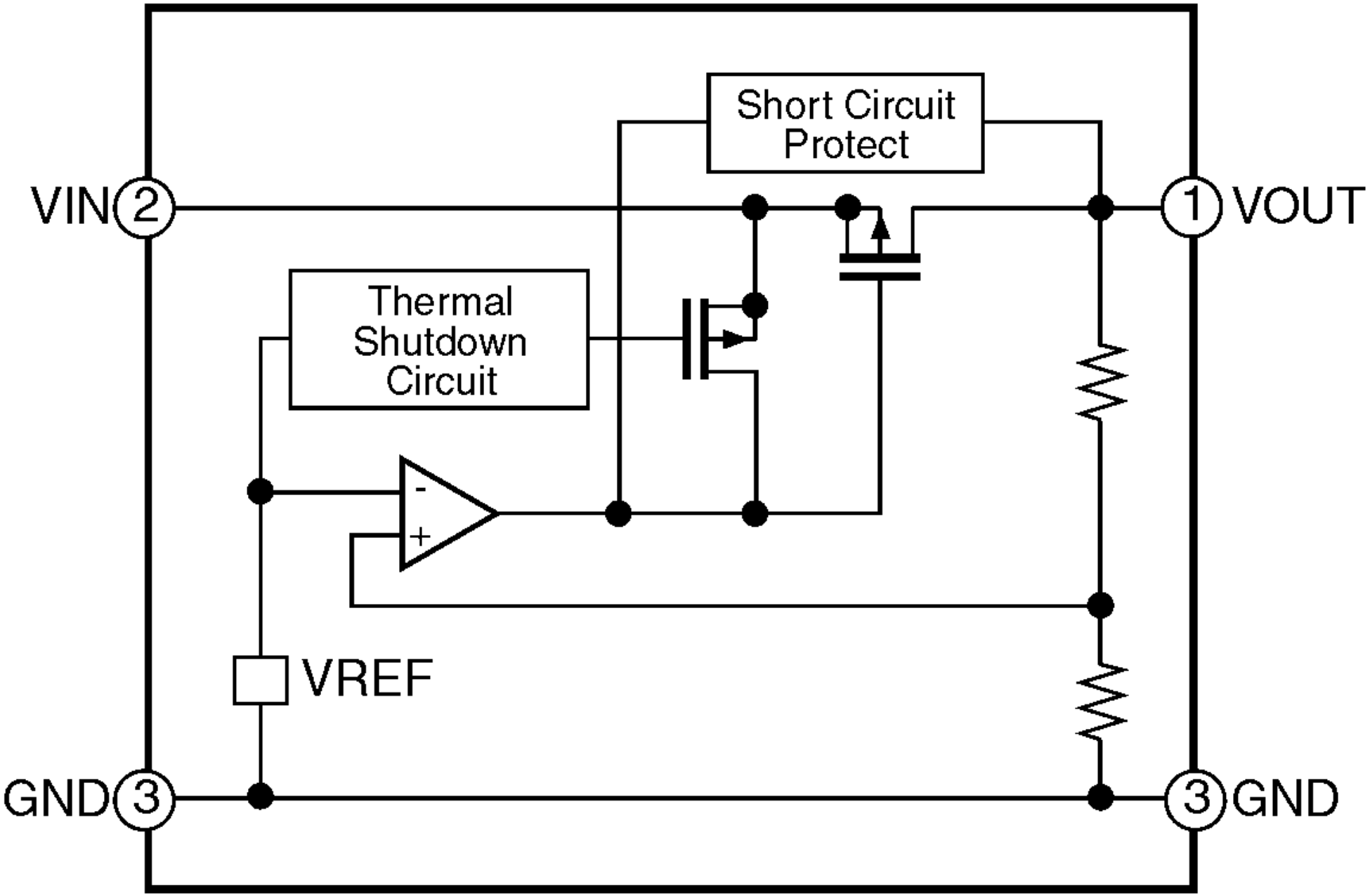
Short Circuit
Protect
VIN
2
1
VOUT
Thermal
Shutdown
Circuit
-
+
VREF
GND
3
3
GND

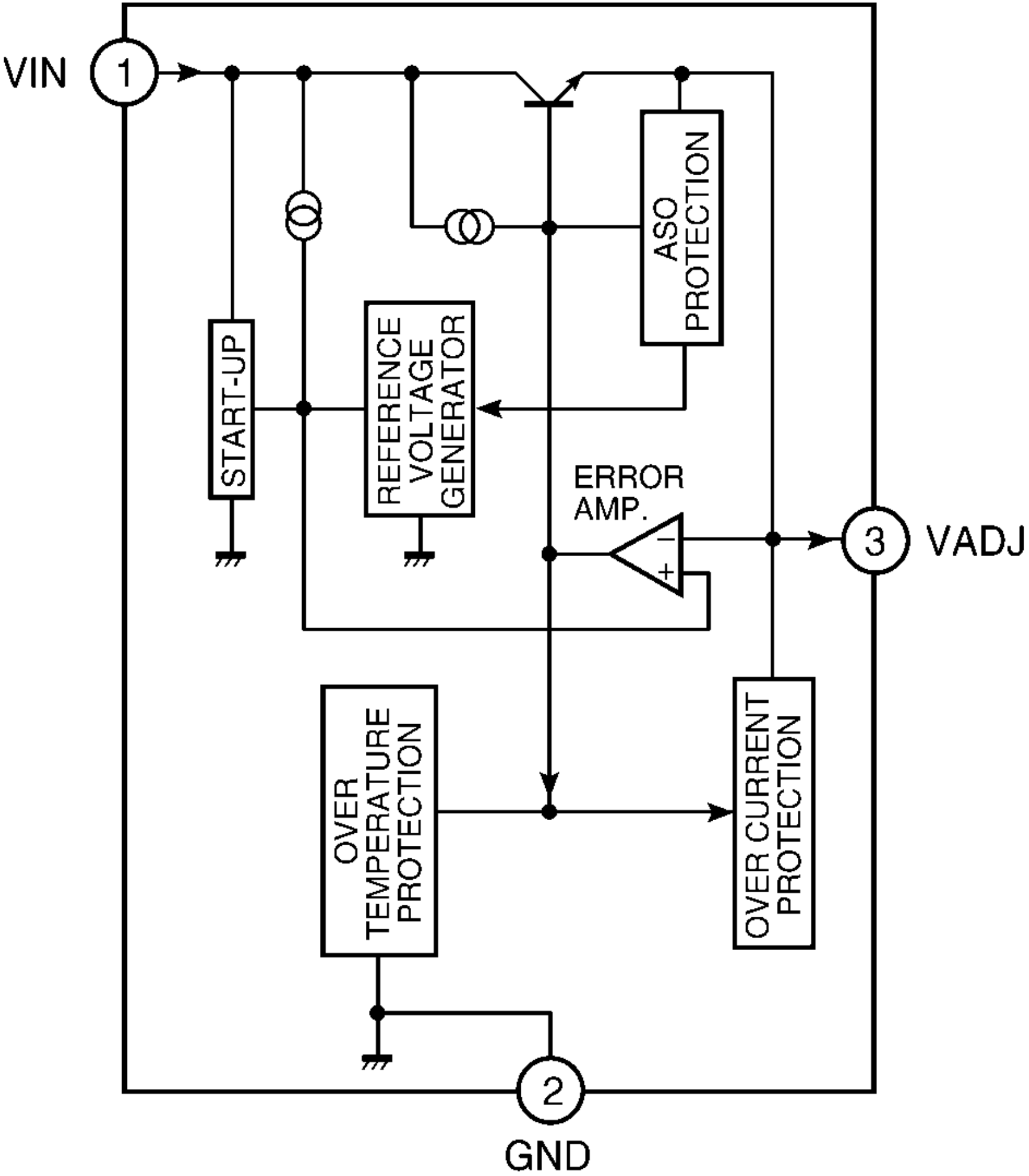
VIN
1
START-UP
REFERENCE VOLTAGE GENERATOR
ASO PROTECTION
ERROR AMP.
3
VADJ
OVER TEMPERATURE PROTECTION
OVER CURRENT PROTECTION
2
GND

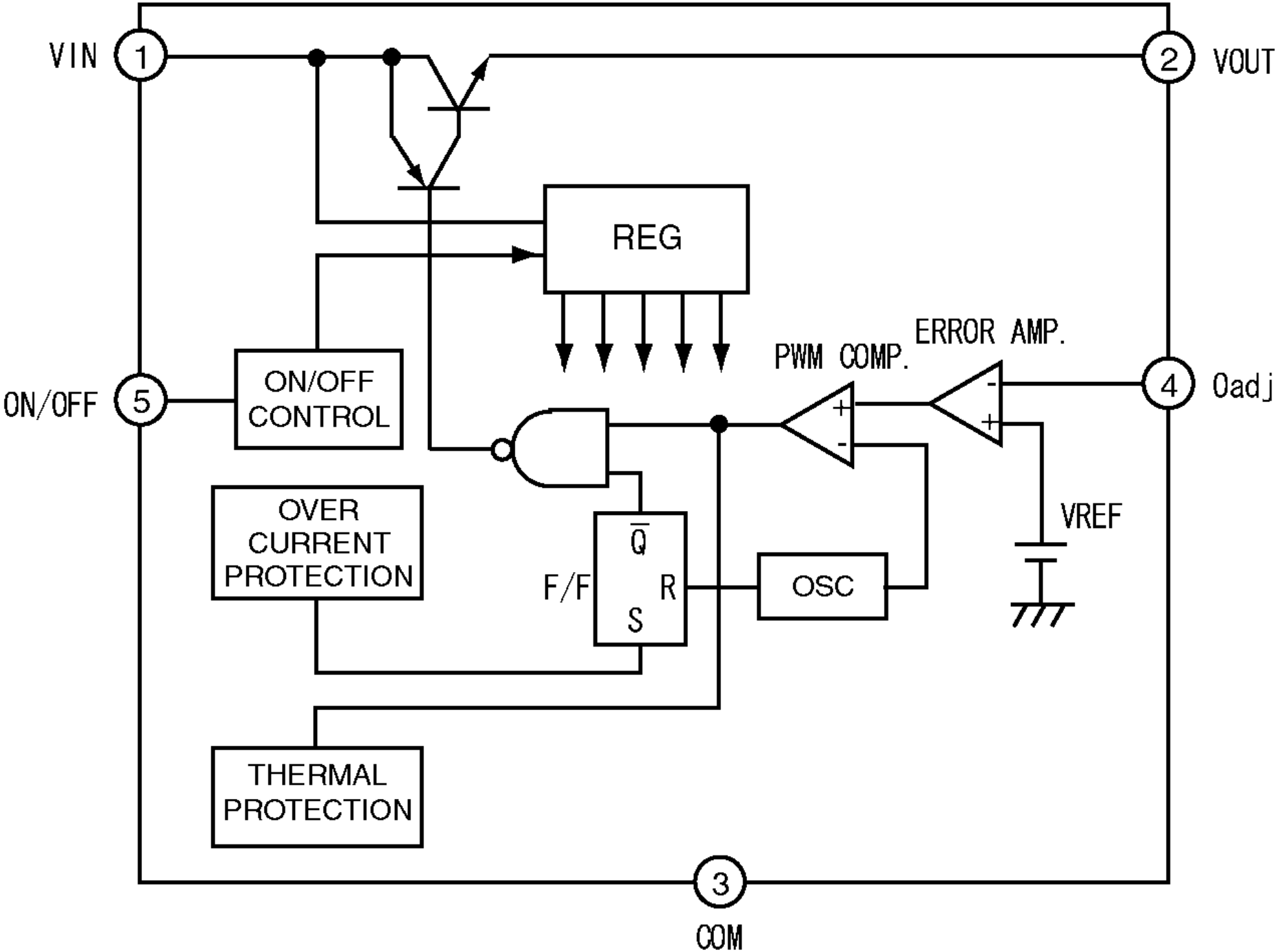
VIN
1
2
VOUT
REG
ERROR AMP.
PWM COMP.
ON/OFF
5
ON/OFF
CONTROL
4
Oadj
OVER
CURRENT
PROTECTION
VREF
Q̄
F/F
R
S
OSC
THERMAL
PROTECTION
3
COM

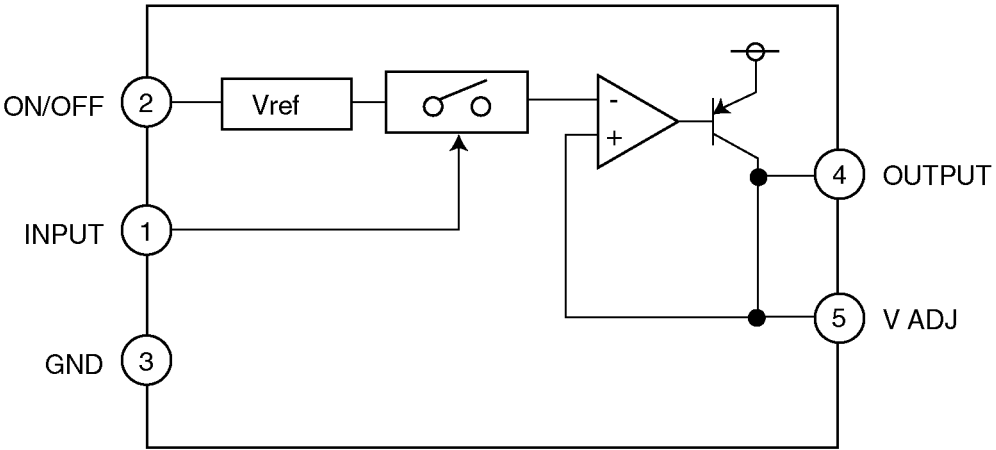
ON/OFF
2
Vref
INPUT
1
GND
3
-
+
4
OUTPUT
5
V ADJ

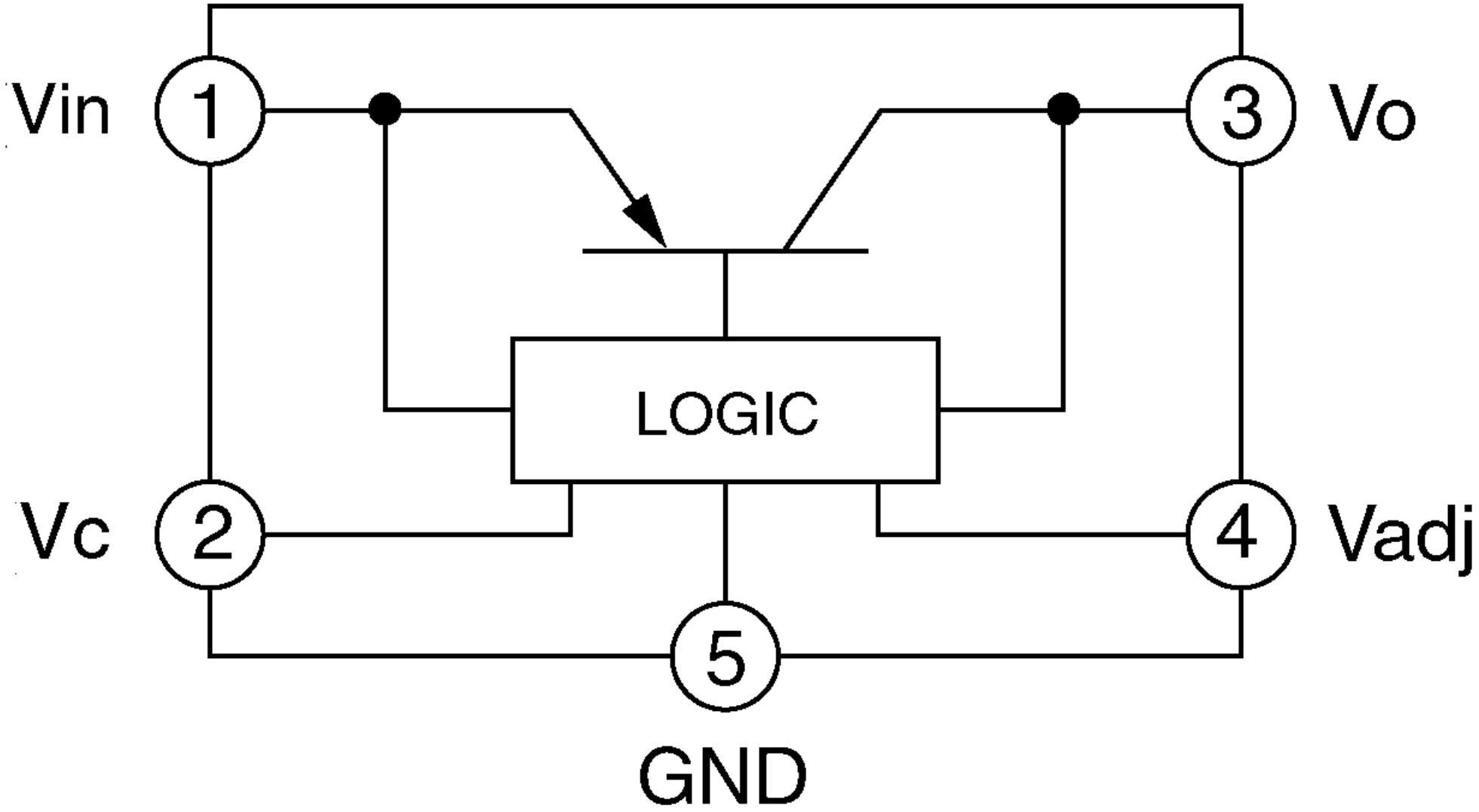
Vin
1
3
Vo
LOGIC
Vc
2
4
Vadj
5
GND

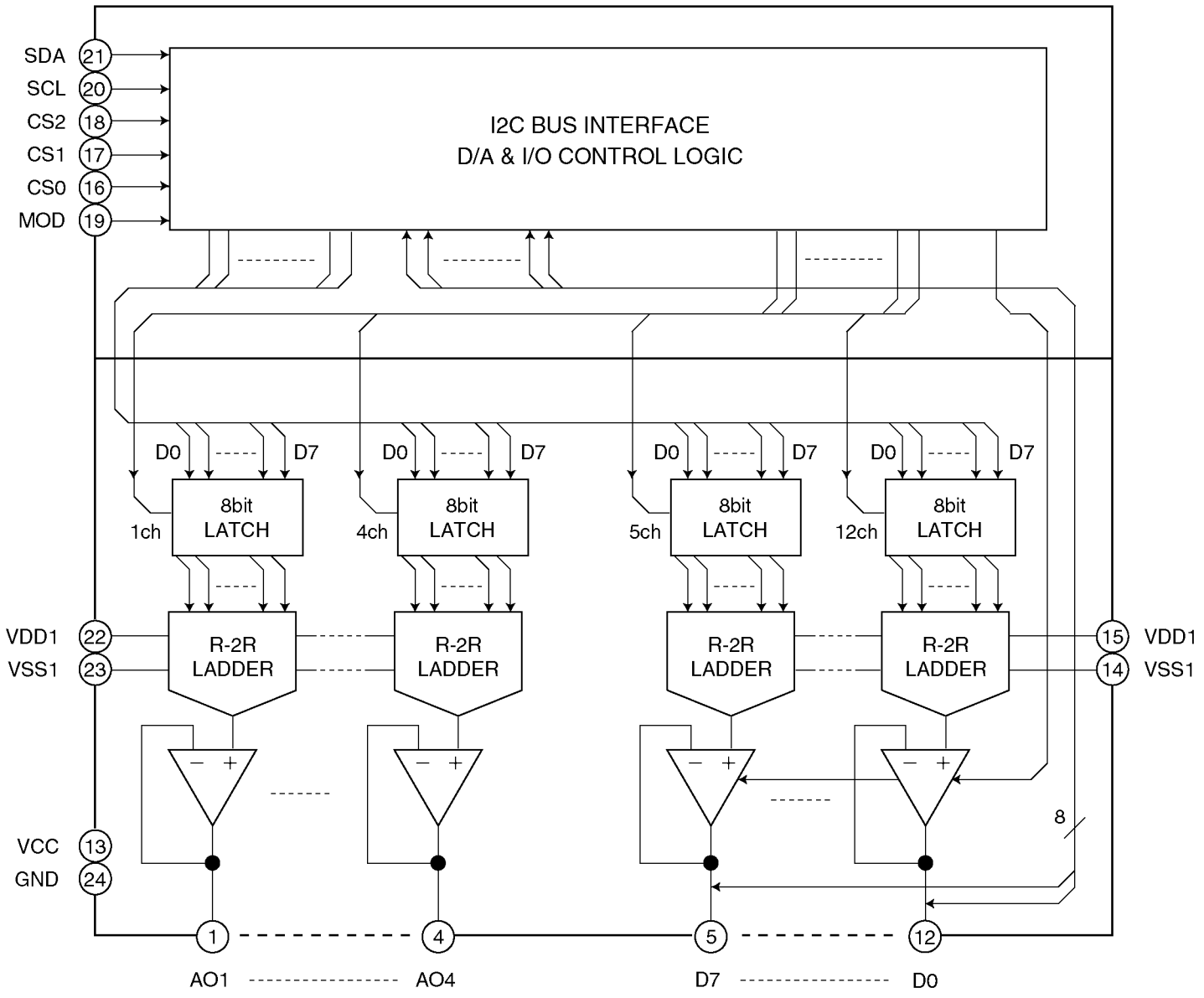
SDA
SCL
CS2
CS1
CS0
MOD
21
20
18
17
16
19
I2C BUS INTERFACE
D/A & I/O CONTROL LOGIC
D0
D7
8bit
LATCH
1ch
4ch
5ch
12ch
VDD1
VSS1
22
23
R-2R
LADDER
15
14
VCC
GND
13
24
8
1
4
5
12
AO1
AO4
D7
D0

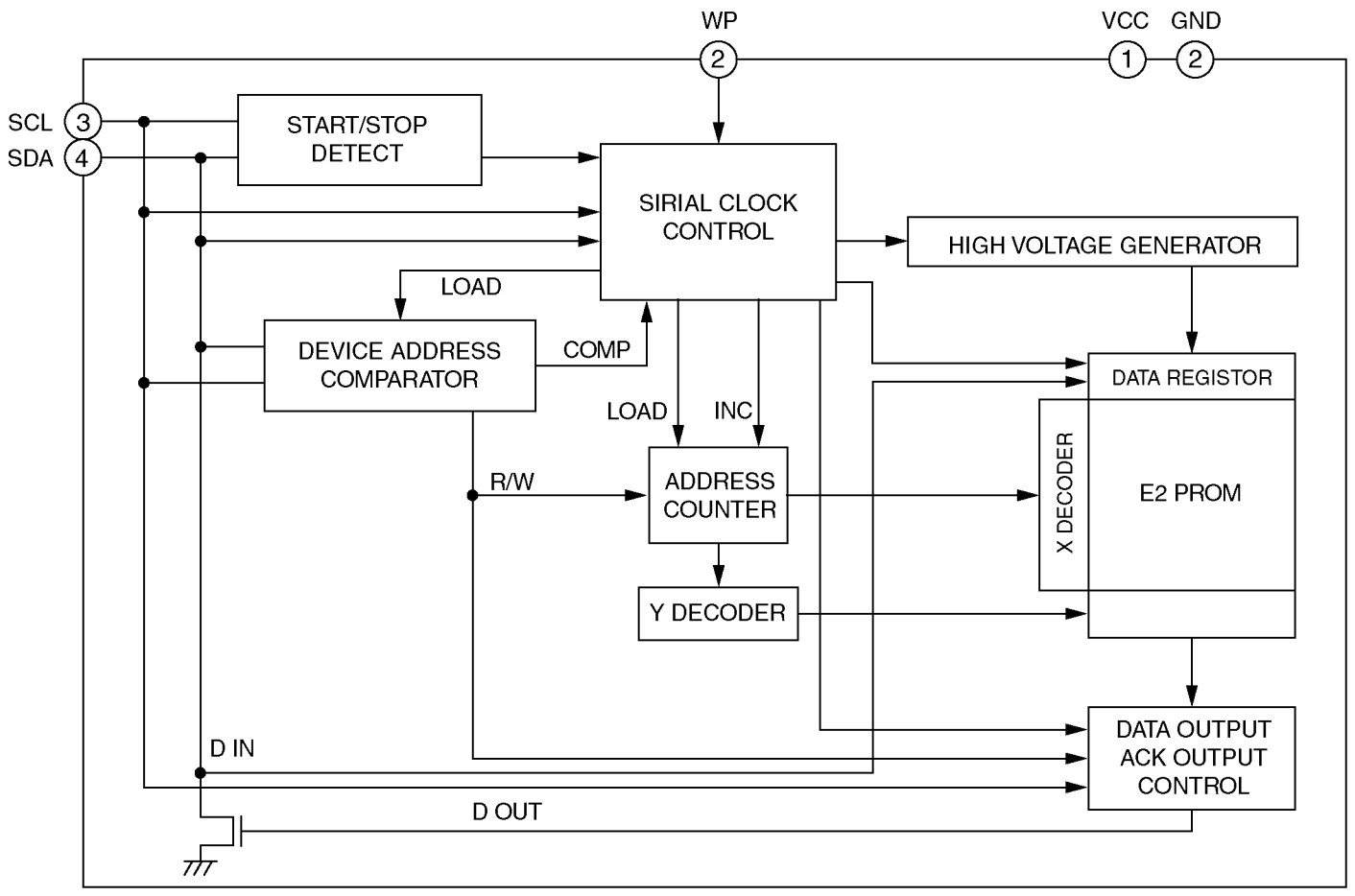
WP
VCC
GND
2
1
2
SCL
3
SDA
4
START/STOP DETECT
SIRIAL CLOCK CONTROL
HIGH VOLTAGE GENERATOR
LOAD
DEVICE ADDRESS COMPARATOR
COMP
DATA REGISTOR
LOAD
INC
X DECODER
E2 PROM
R/W
ADDRESS COUNTER
Y DECODER
D IN
DATA OUTPUT ACK OUTPUT CONTROL
D OUT

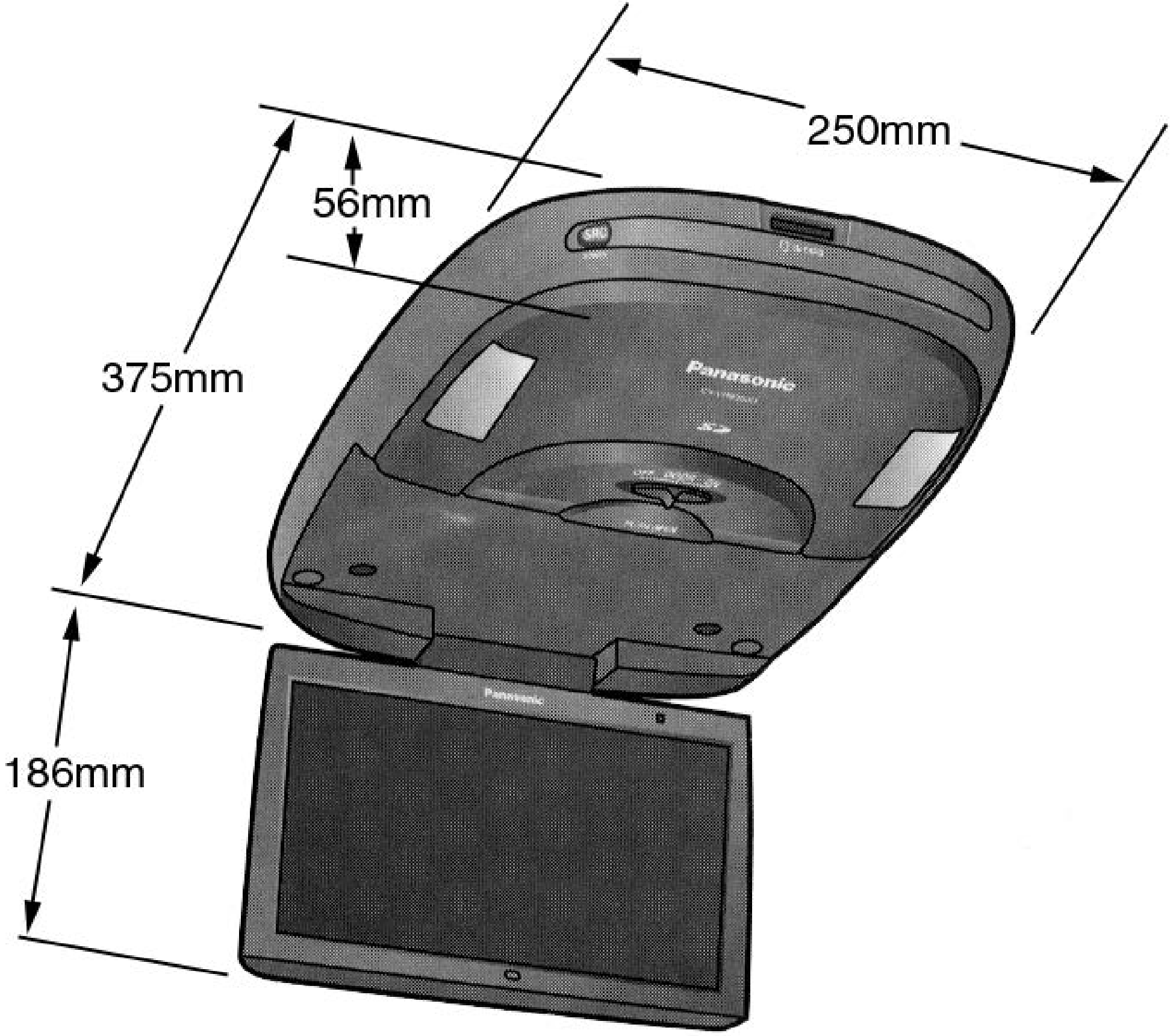
250mm
56mm
375mm
186mm
Panasonic
Panasonic

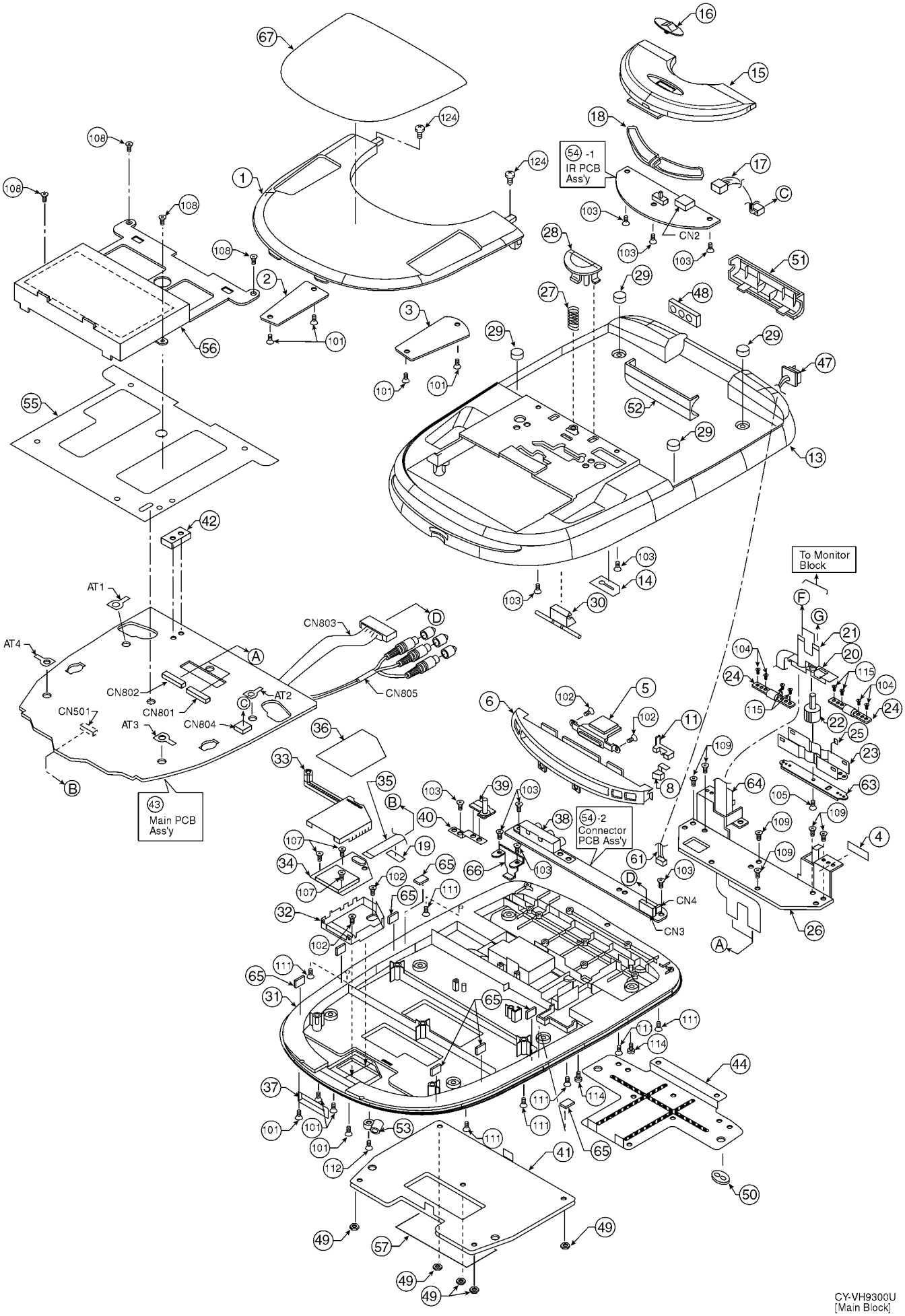
54 -1
IR PCB
Ass'y
CN2
54 -2
Connector
PCB Ass'y
CN3
CN4
43
Main PCB
Ass'y
AT1
AT2
AT3
AT4
CN501
CN801
CN802
CN803
CN804
CN805
To Monitor
Block
CY-VH9300U
[Main Block]

A B

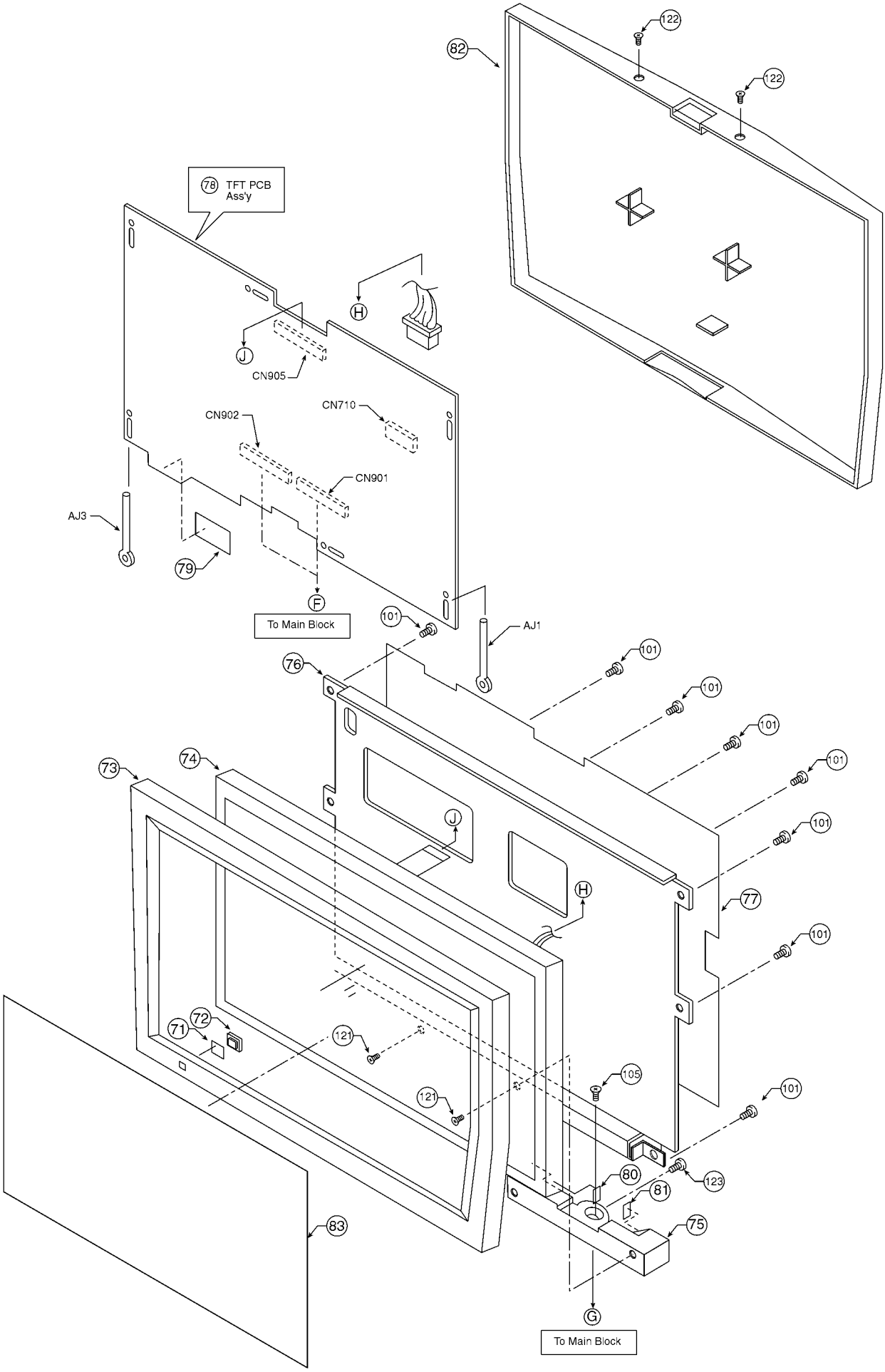

35

CY-VH9300U
[Monitor Block]

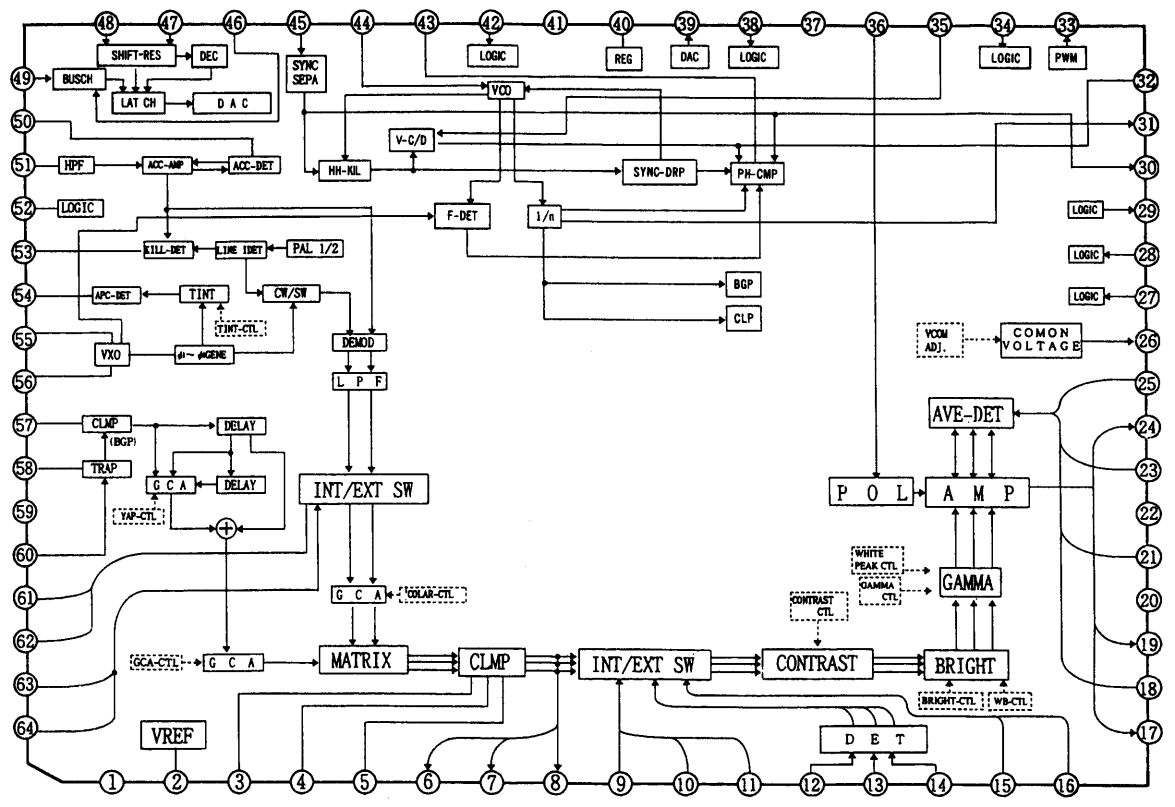
SHIFT-RES
DEC
BUSCH
LAT CH
D A C
SYNC SEPA
LOGIC
REG
DAC
LOGIC
LOGIC
PWM
VCO
V-C/D
HPF
ACC-AMP
ACC-DET
HH-KIL
SYNC-DRP
PH-CMP
LOGIC
F-DET
1/n
LOGIC
KILL-DET
LINE DET
PAL 1/2
LOGIC
LOGIC
APC-DET
TINT
CW/SW
BGP
TINT-CTL
CLP
VXO
φ1~ φ6GENE
DEMOD
VCOM ADJ.
COMON VOLTAGE
L P F
AVE-DET
CLMP
(BGP)
DELAY
TRAP
G C A
DELAY
INT/EXT SW
P O L
A M P
YAP-CTL
WHITE PEAK CTL
GAMMA CTL
GAMMA
G C A
COLAR-CTL
CONTRAST CTL
GCA-CTL
G C A
MATRIX
CLMP
INT/EXT SW
CONTRAST
BRIGHT
BRIGHT-CTL
WB-CTL
VREF
D E T

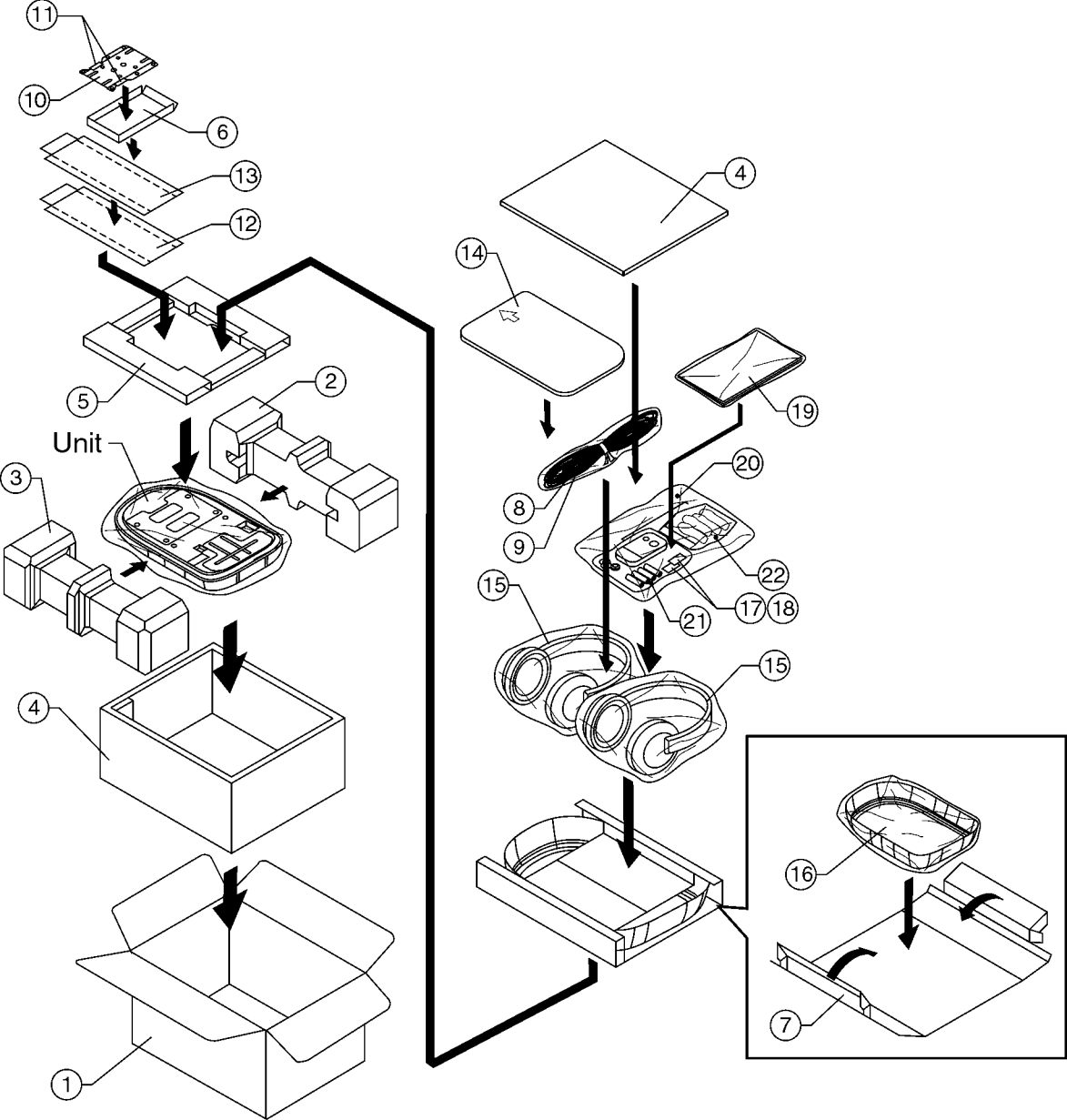
11
10
6
13
12
5
2
Unit
3
4
1
14
4
19
20
8
9
22
15
21
17
18
15
16
7

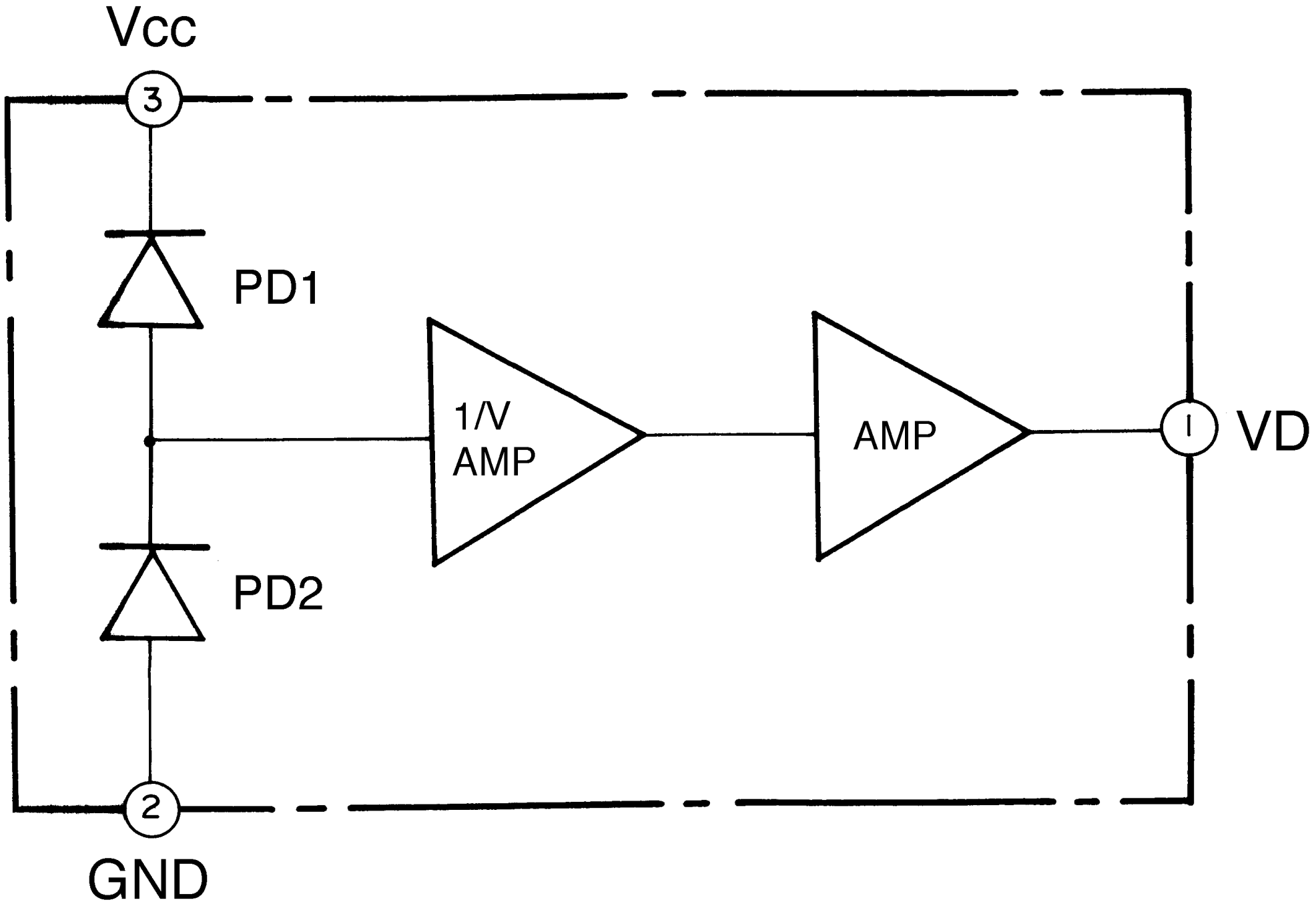
Vcc
3
PD1
1/V
AMP
AMP
1
VD
PD2
2
GND

16 SCHEMATIC DIAGRAM -2

16.1. Main Block -1

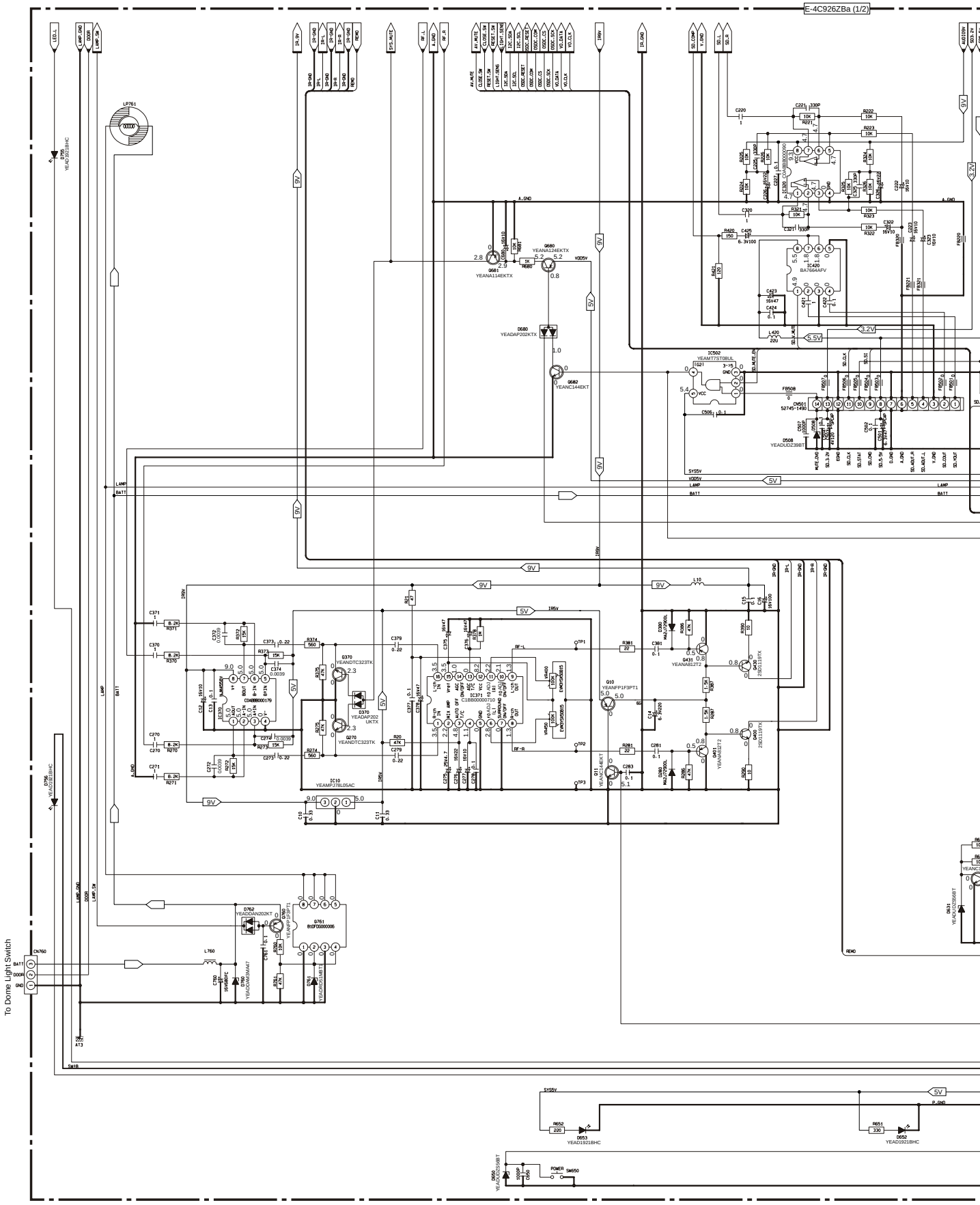

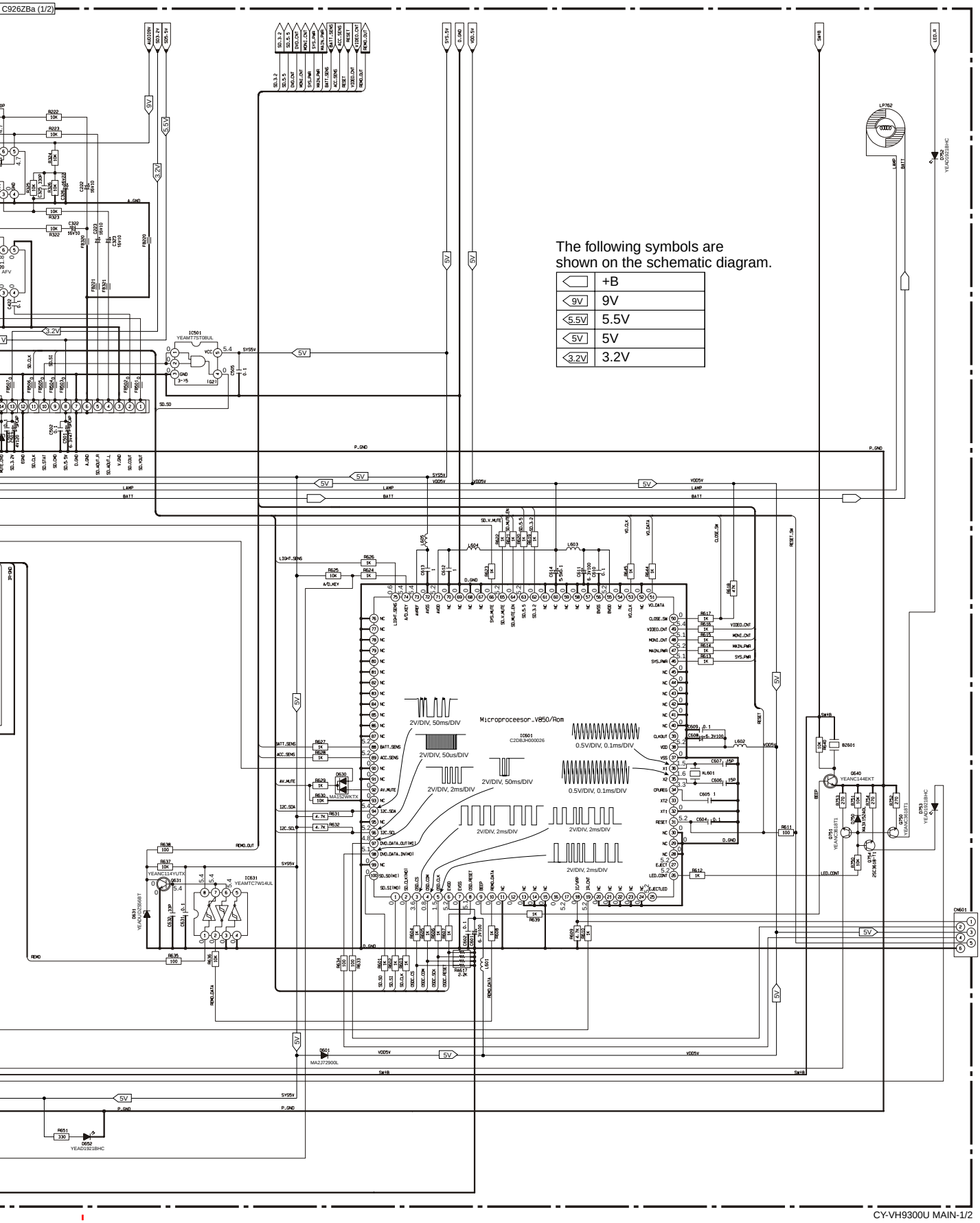

CY-VH9300U MAIN-1/2

16.2. Main Block -2

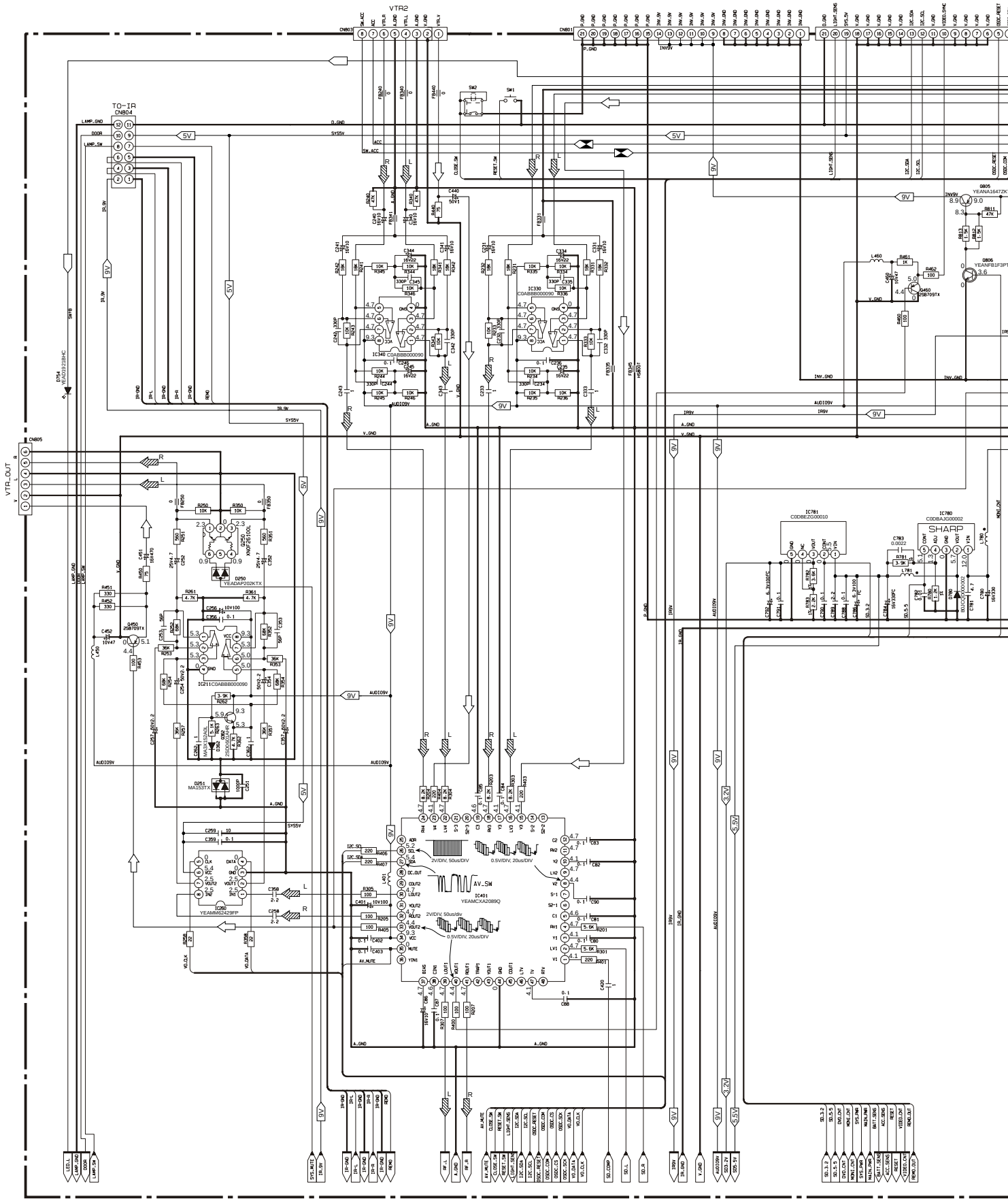

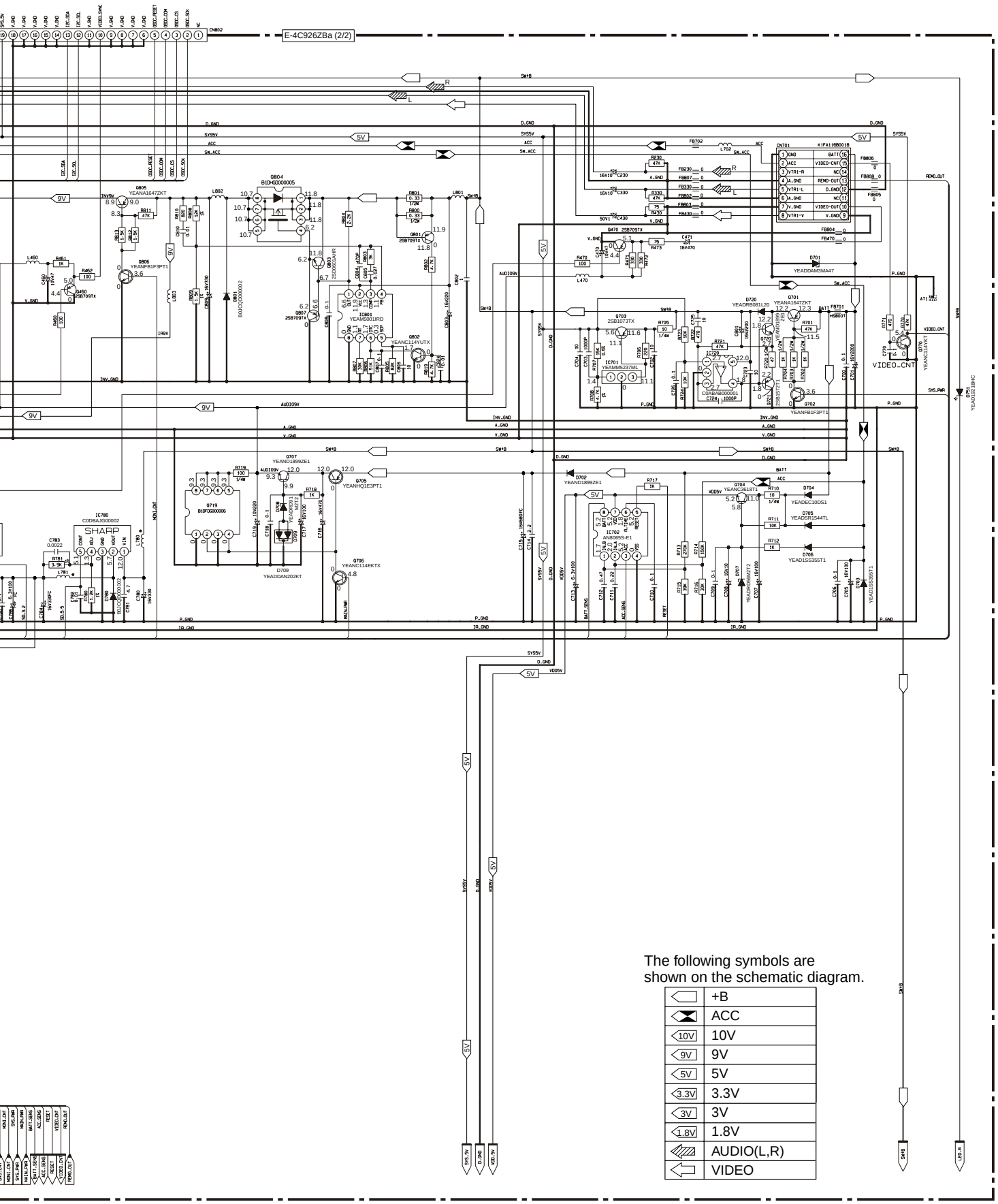

The following symbols are shown on the schematic diagram.

	+B
	ACC
10V	10V
9V	9V
5V	5V
3.3V	3.3V
3V	3V
1.8V	1.8V
	AUDIO(L,R)
	VIDEO

16.3. TFT Block

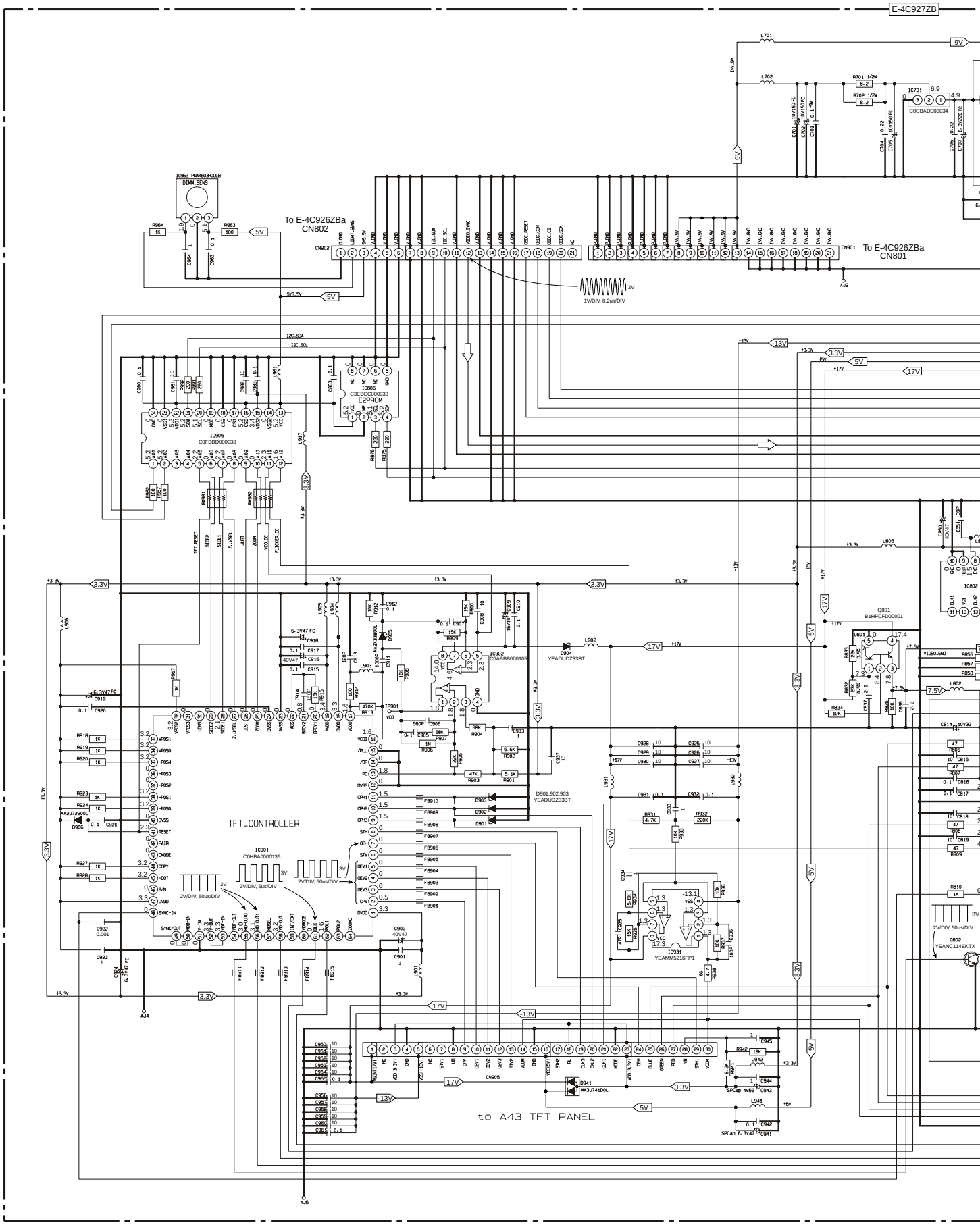

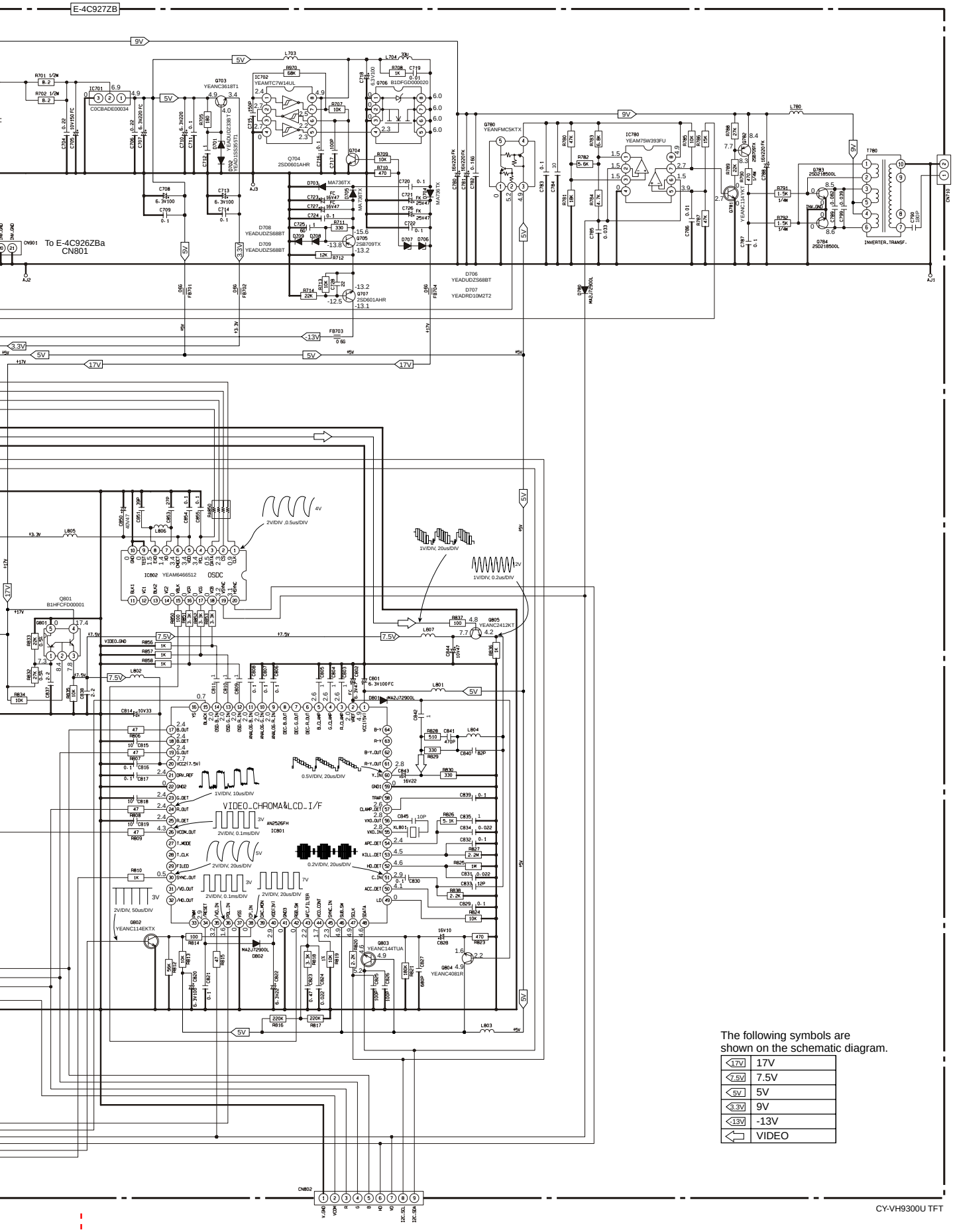

The following symbols are shown on the schematic diagram.

17V	17V
7.5V	7.5V
5V	5V
3.3V	9V
13V	-13V
	VIDEO

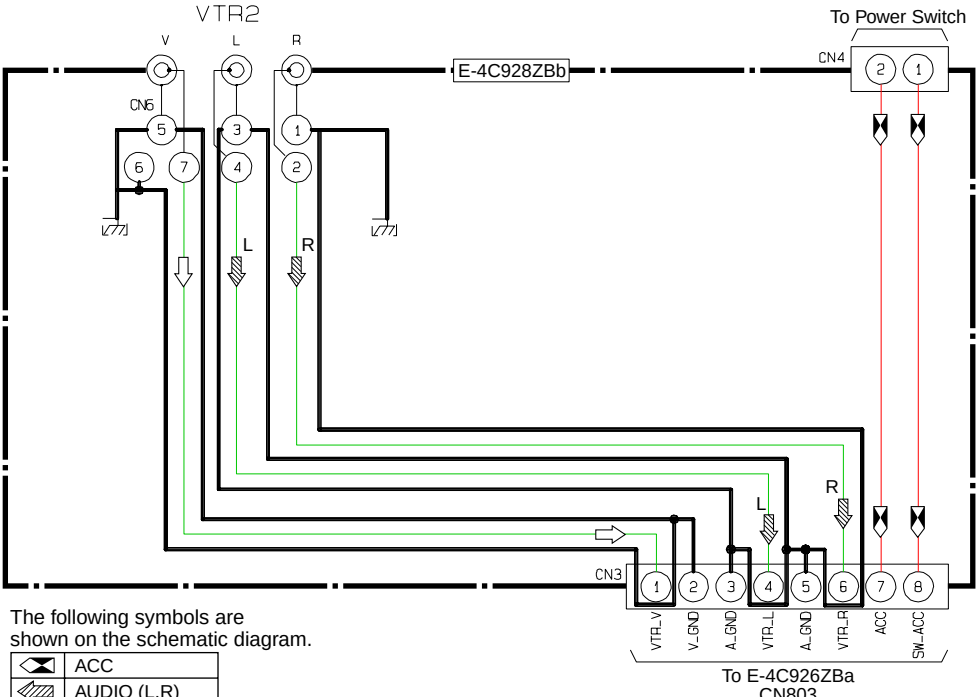

The following symbols are shown on the schematic diagram.

	ACC
	AUDIO (L,R)
	VIDEO

CY-VH9300U CONNECTOR

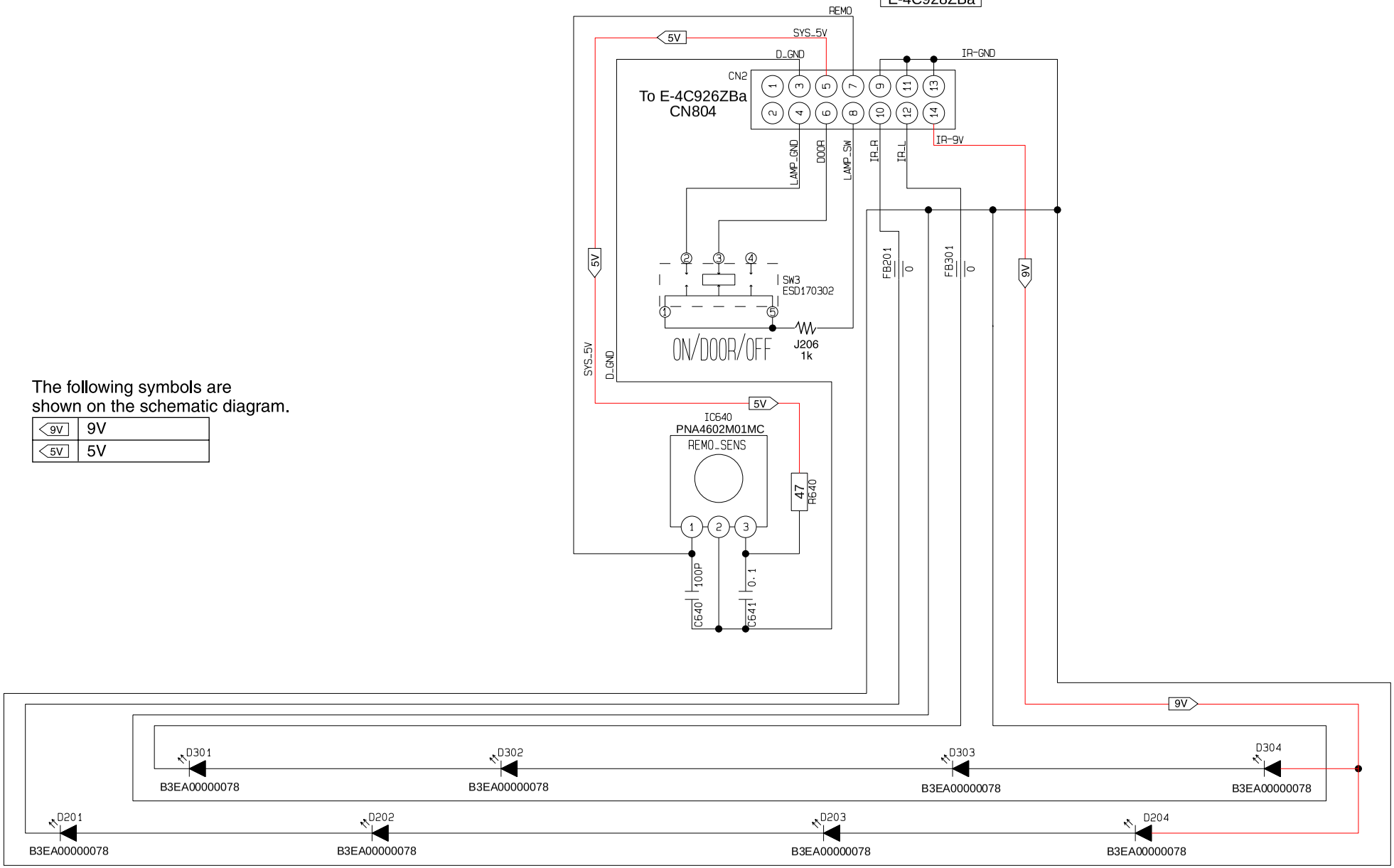

The following symbols are shown on the schematic diagram.

9V	9V
5V	5V

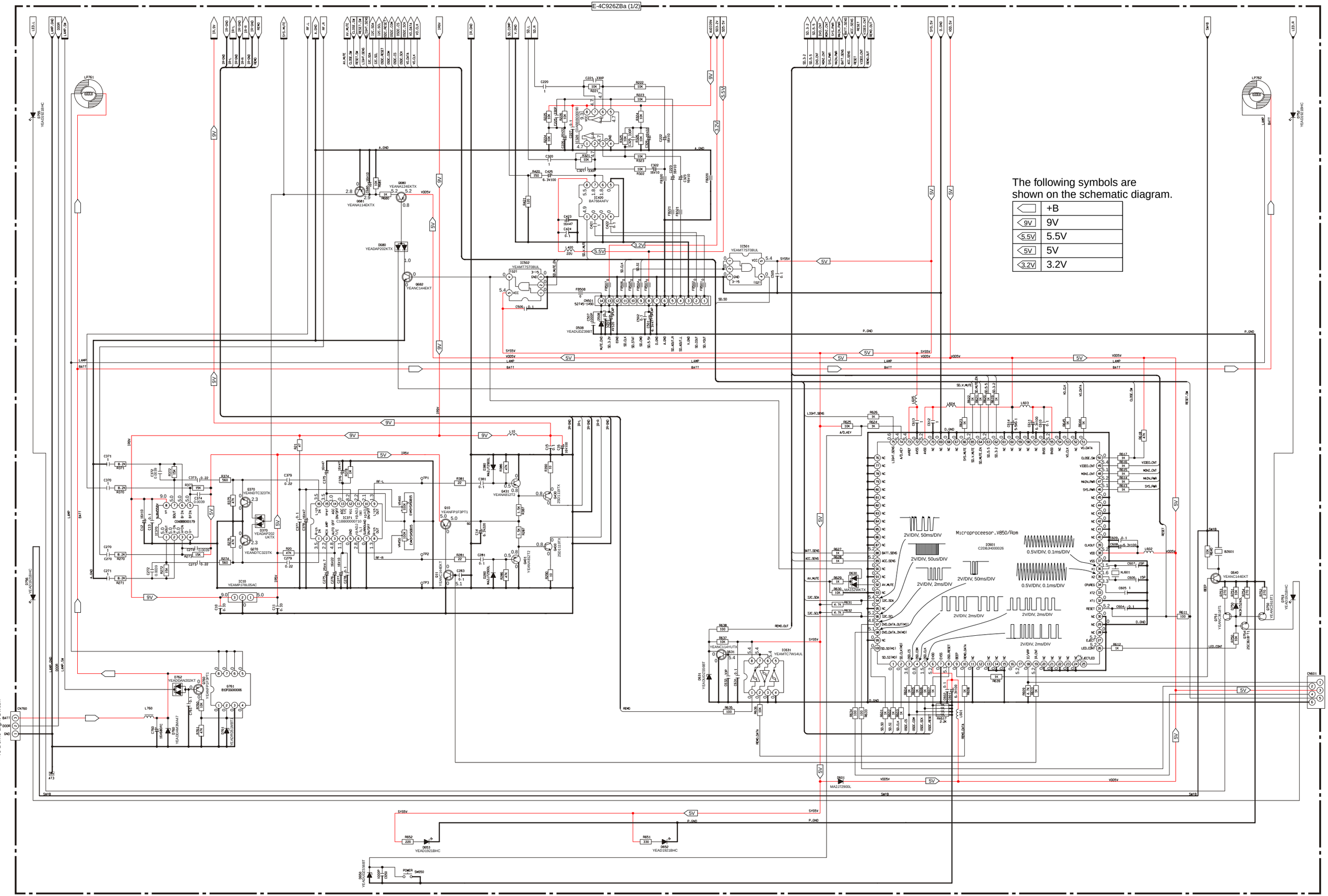
The following symbols are shown on the schematic diagram.
+B
9V
9V
5.5V
5.5V
5V
5V
3.2V
3.2V
Microprocessor_V850/Rom
IC501
C2DBJH000026
2V/DIV, 50ms/DIV
2V/DIV, 50us/DIV
2V/DIV, 2ms/DIV
2V/DIV, 50ms/DIV
0.5V/DIV, 0.1ms/DIV
0.5V/DIV, 0.1ms/DIV
2V/DIV, 2ms/DIV
2V/DIV, 2ms/DIV
2V/DIV, 2ms/DIV
To Dome Light Switch
to Flasproo

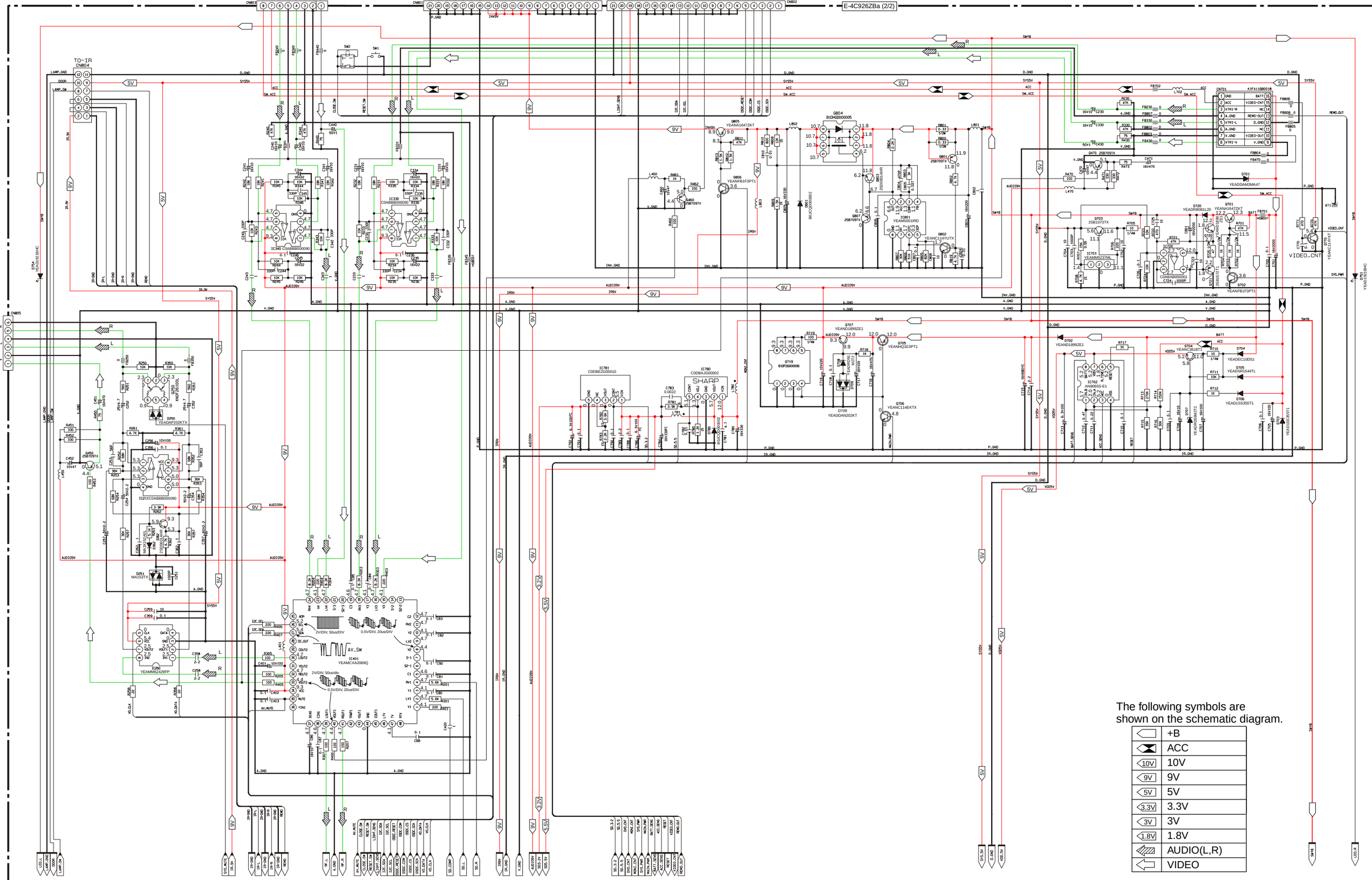
E-4C926ZBa (2/2)
TO-IR
CN804
VTR_OUT
CN805
VTR2
CN803
CN801
CN802
IC330
COABBB000090
IC340
COABBB000090
IC211
COABBB000090
IC401
YEAMCXA2089Q
IC501
YEAMM02429FP
IC781
CODBEZ000010
IC780
CODBAJG00002
SHARP
IC801
YEAMS003IRD
IC702
AN8065S-E1
IC701
YEAMM5237ML
IC720
COAB400005
IC724
COAB400005
Q804
B1DKG000005
Q805
YEANA1647ZKT
Q806
YEANFB1F3PT1
Q807
2SB709TX
Q802
YEANC124YUTX
Q803
2SD2560HR
Q801
2SB709TX
Q701
YEANA1647ZKT
Q702
YEANFB1F3PT1
Q703
2SB1073TX
Q705
YEANHQ1E3PT1
Q706
YEANC114EKTX
Q707
YEAND18992E1
Q709
YEADDAN202KT
Q450
2SB709TX
Q470
2SB709TX
Q460
2SB709TX
Q461
2SB709TX
Q462
2SB709TX
Q704
YEANC3618T1
Q720
YEADRB0811.20
D250
YEADAP202KTX
D251
MA153TX
D701
YEADDAXM3A47
D702
YEAND18992E1
D704
YEADEC10DS1
D705
YEADSR1544TL
D706
YEAD1SS355T1
D707
YEADRS6M372
D709
YEADDAN202KT
D720
YEADRB0811.20
D751
YEADD1819HC
D754
YEADD1819HC
D770
YEANC114YKT
D771
YEADD1819HC
CN701
K1FA116B0018
VIDEO_CNT
REMO_OUT
SW.ACC
SYS.PWR
AUDIO(L,R)
VIDEO
The following symbols are shown on the schematic diagram.
+B
ACC
10V
9V
5V
3.3V
3V
1.8V
AUDIO(L,R)
VIDEO

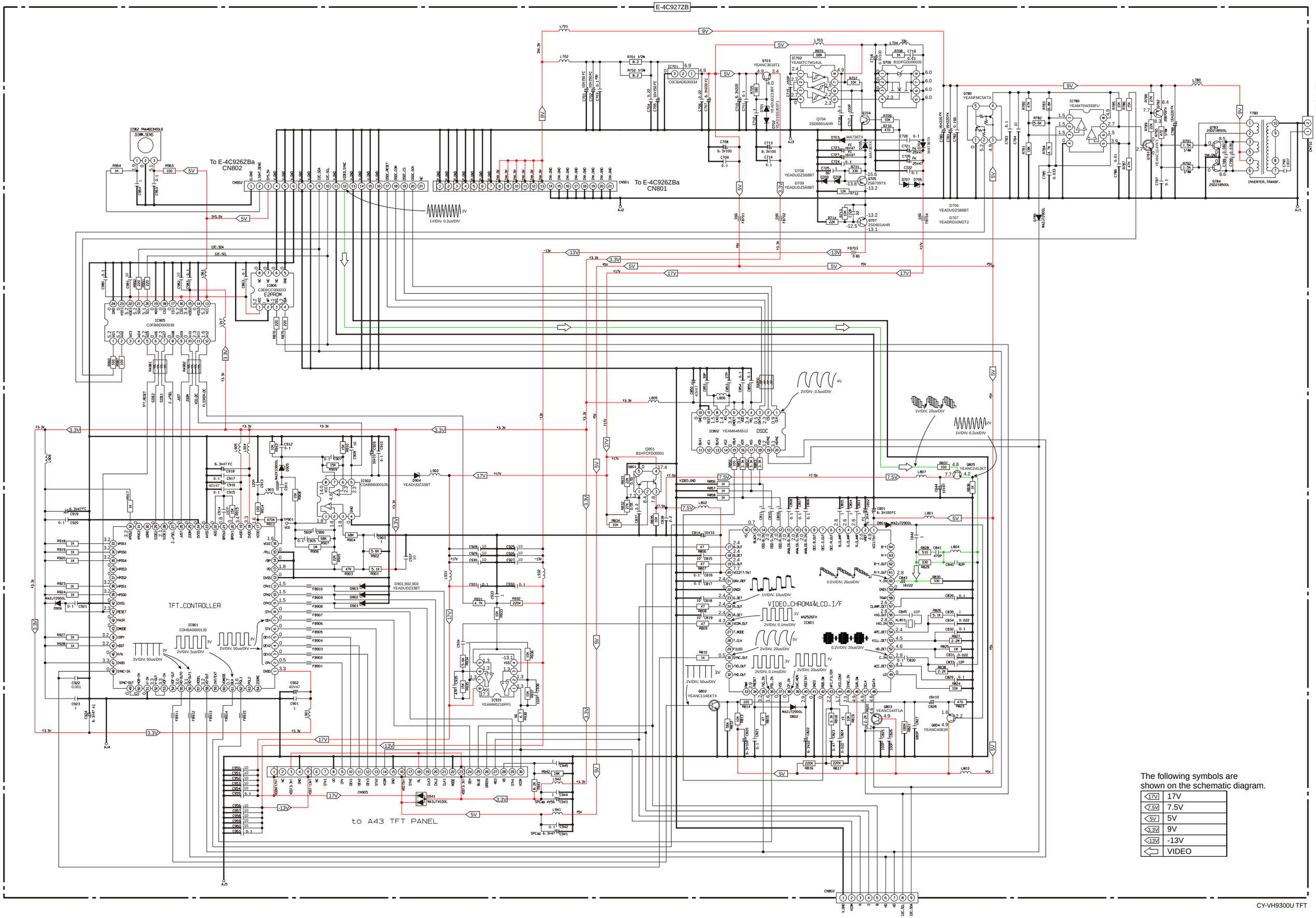

The following symbols are shown on the schematic diagram.

17V	17V
7.5V	7.5V
5V	5V
3.3V	9V
13V	-13V
	VIDEO

1. Unlock the nail of Power Switch.
2. Remove the Power Switch.

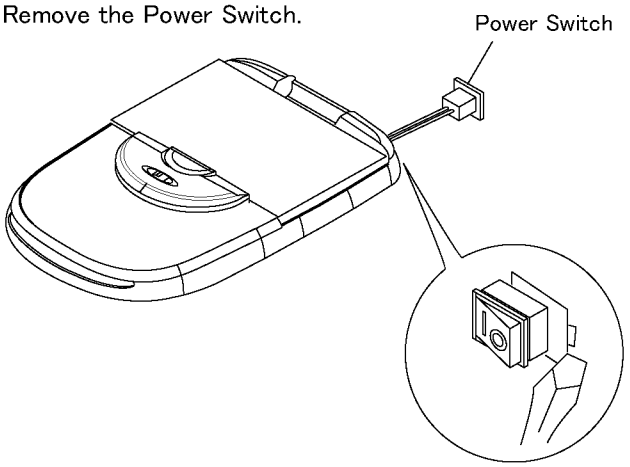

3. Push the Open Button and raise the Monitor Block.

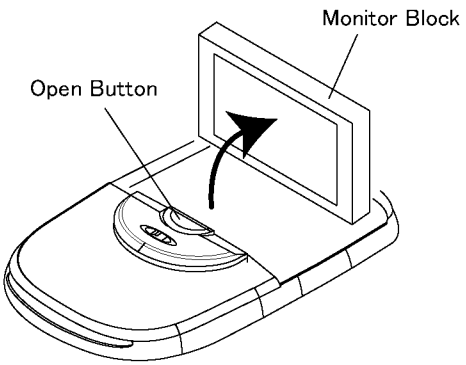

4. Remove two screws (◎).
5. Ulock eight nailes (★) and remove Monitor Cover.

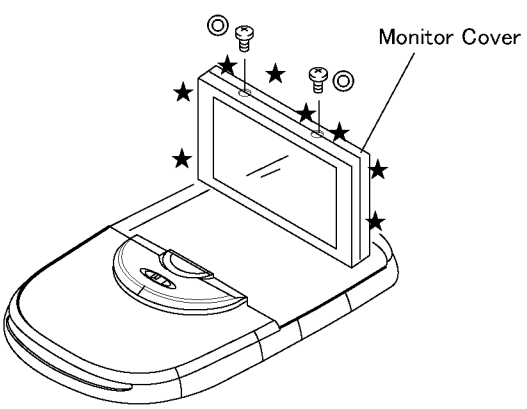

6. Disconnect Flexible PCB from CN901, CN902 (TFT PCB).

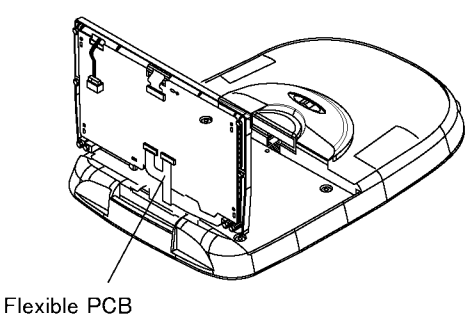

7. Remove one screw (△) and remove Monitor Block.

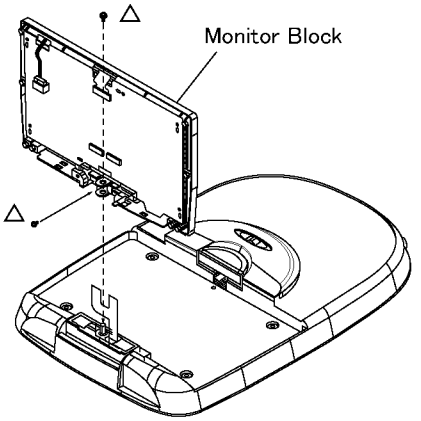

8. Remove twelve screws (▲) from top of the Case.

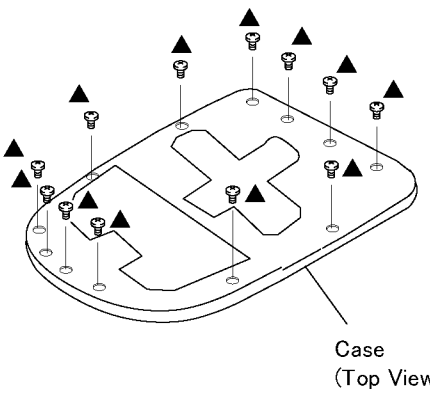

9. Disconnect the the connector of Power Switch from CN4 (Connector PCB).
10. Disconnect CN804 (Main PCB) and Remove the Cover.

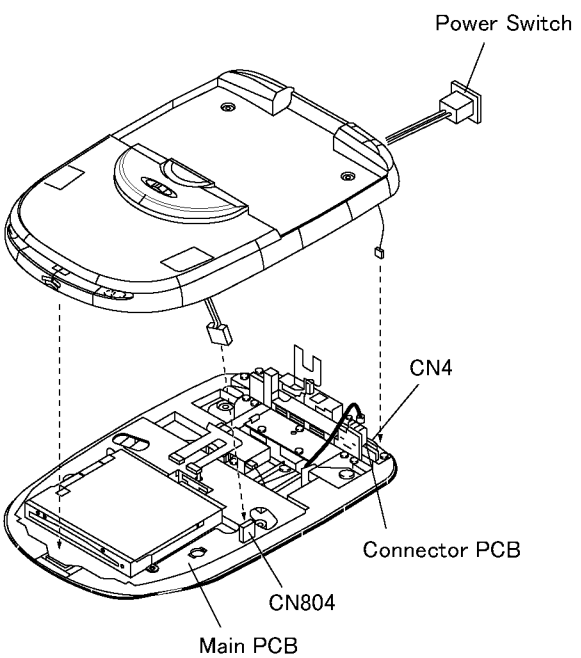

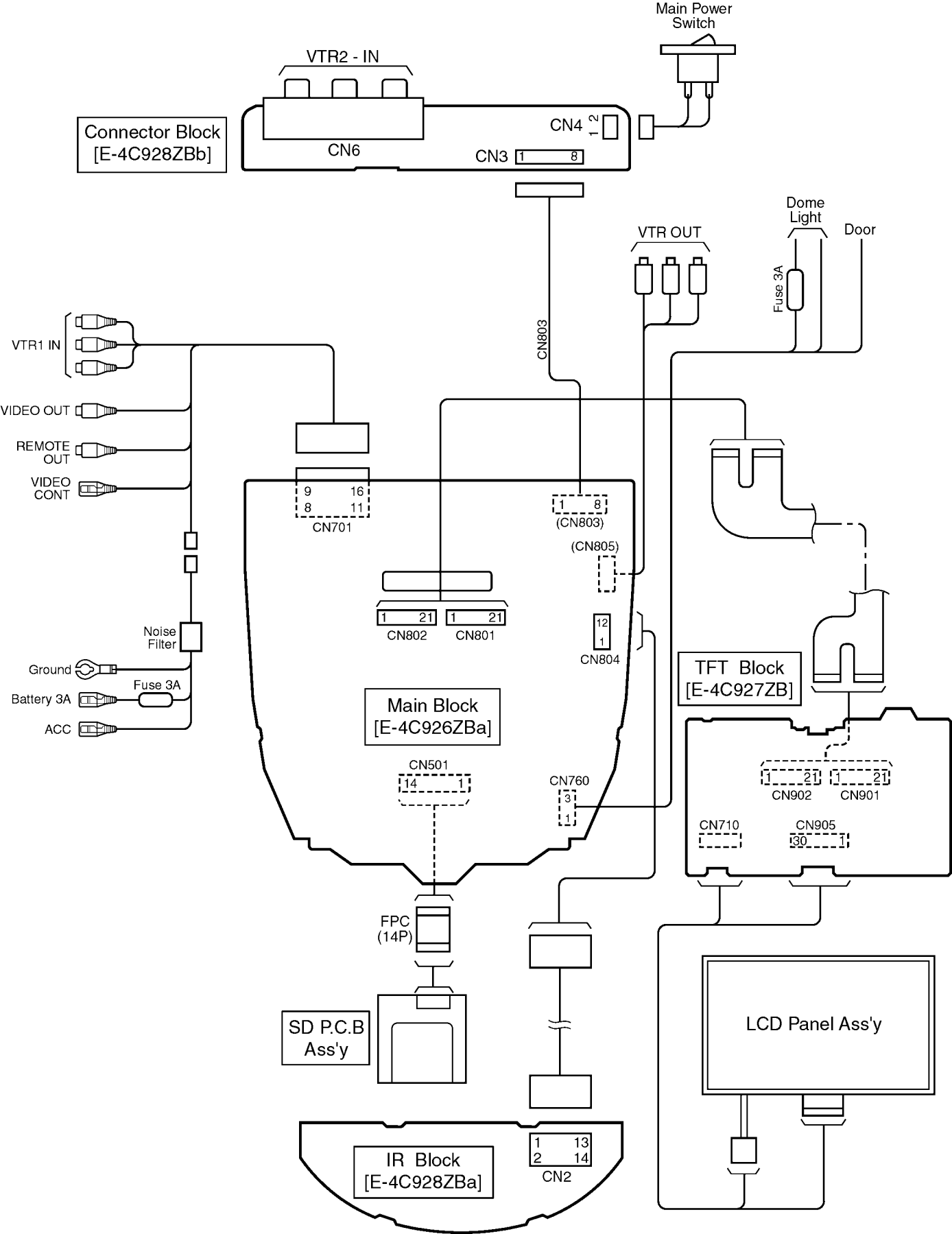
Main Power Switch
VTR2 - IN
Connector Block [E-4C928ZBb]
CN6
CN4
1 2
CN3
1 8
CN803
VTR OUT
Dome Light
Door
Fuse 3A
VTR1 IN
VIDEO OUT
REMOTE OUT
VIDEO CONT
9 16
8 11
CN701
1 8
(CN803)
(CN805)
1 21
CN802
1 21
CN801
12
1
CN804
Noise Filter
Ground
Fuse 3A
Battery 3A
ACC
Main Block [E-4C926ZBa]
TFT Block [E-4C927ZB]
CN501
14 1
CN760
3
1
1 21
CN902
1 21
CN901
CN710
CN905
30 1
FPC (14P)
SD P.C.B Ass'y
LCD Panel Ass'y
IR Block [E-4C928ZBa]
1 13
2 14
CN2

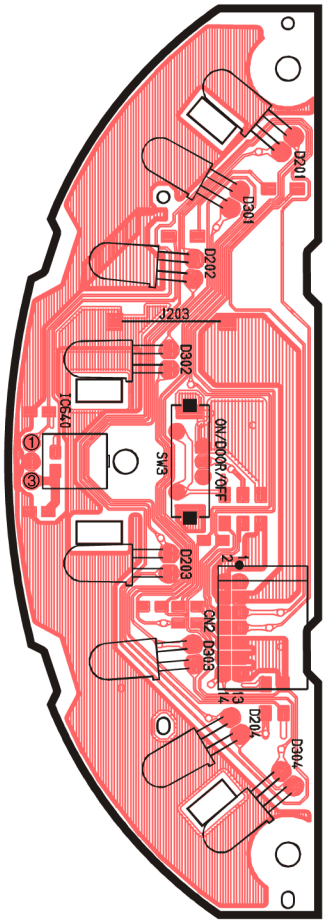

[E-4C928ZBa]
[Top View]

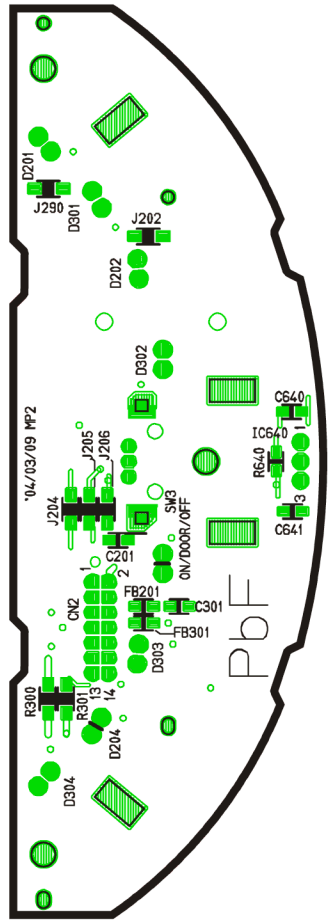

[E-4C928ZBa]
[Top View]

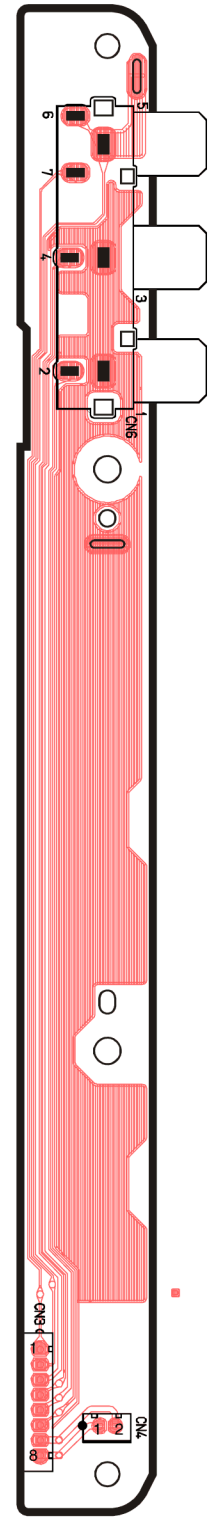

[E-4C928ZBb]
[Top View]

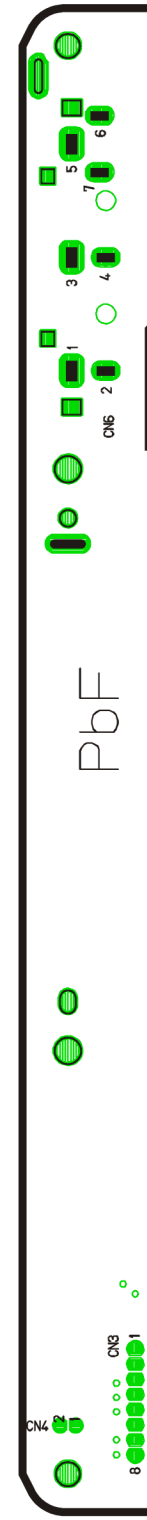

[E-4C928ZBb]
[Bottom View]

CY-VH9300U IR,CONNECTOR P.C.B

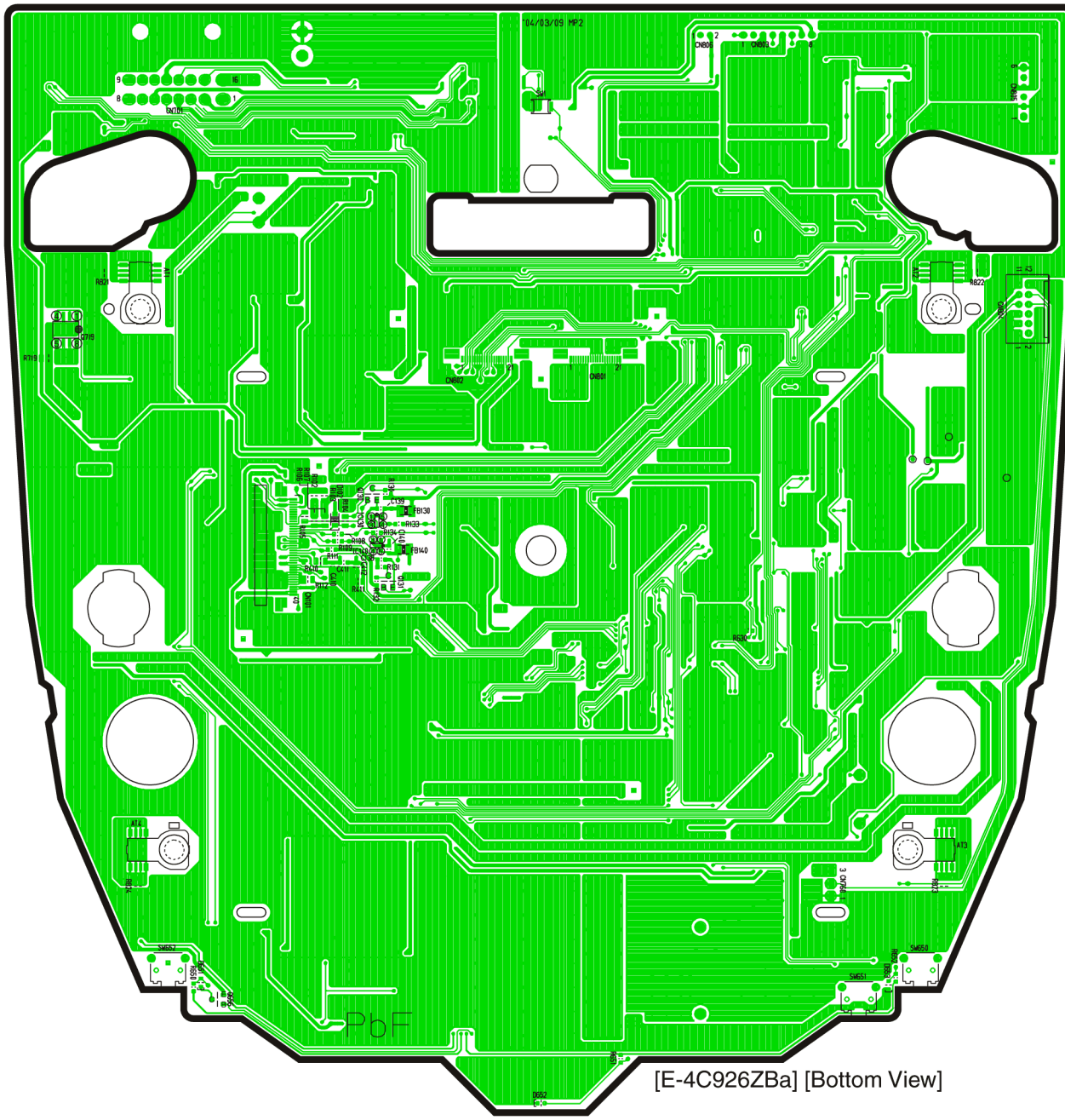
'04/03/09 MP2
CN801
CN802
CN803
CN804
CN805
CN806
CN807
CN808
CN809
CN810
CN811
CN812
CN813
CN814
CN815
CN816
CN817
CN818
CN819
CN820
CN821
CN822
CN823
CN824
CN825
CN826
CN827
CN828
CN829
CN830
CN831
CN832
CN833
CN834
CN835
CN836
CN837
CN838
CN839
CN840

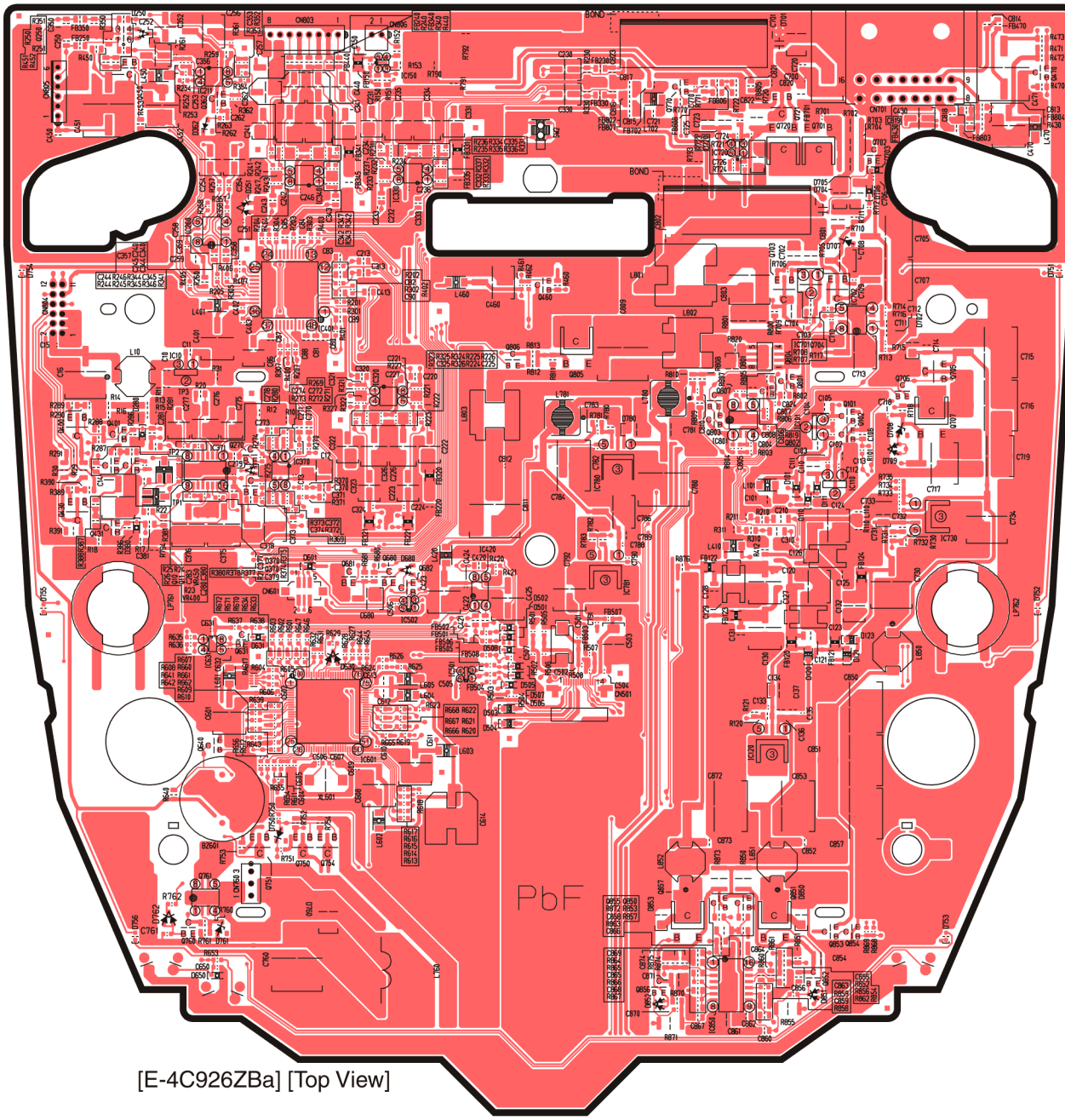

[E-4C926ZBa] [Top View]

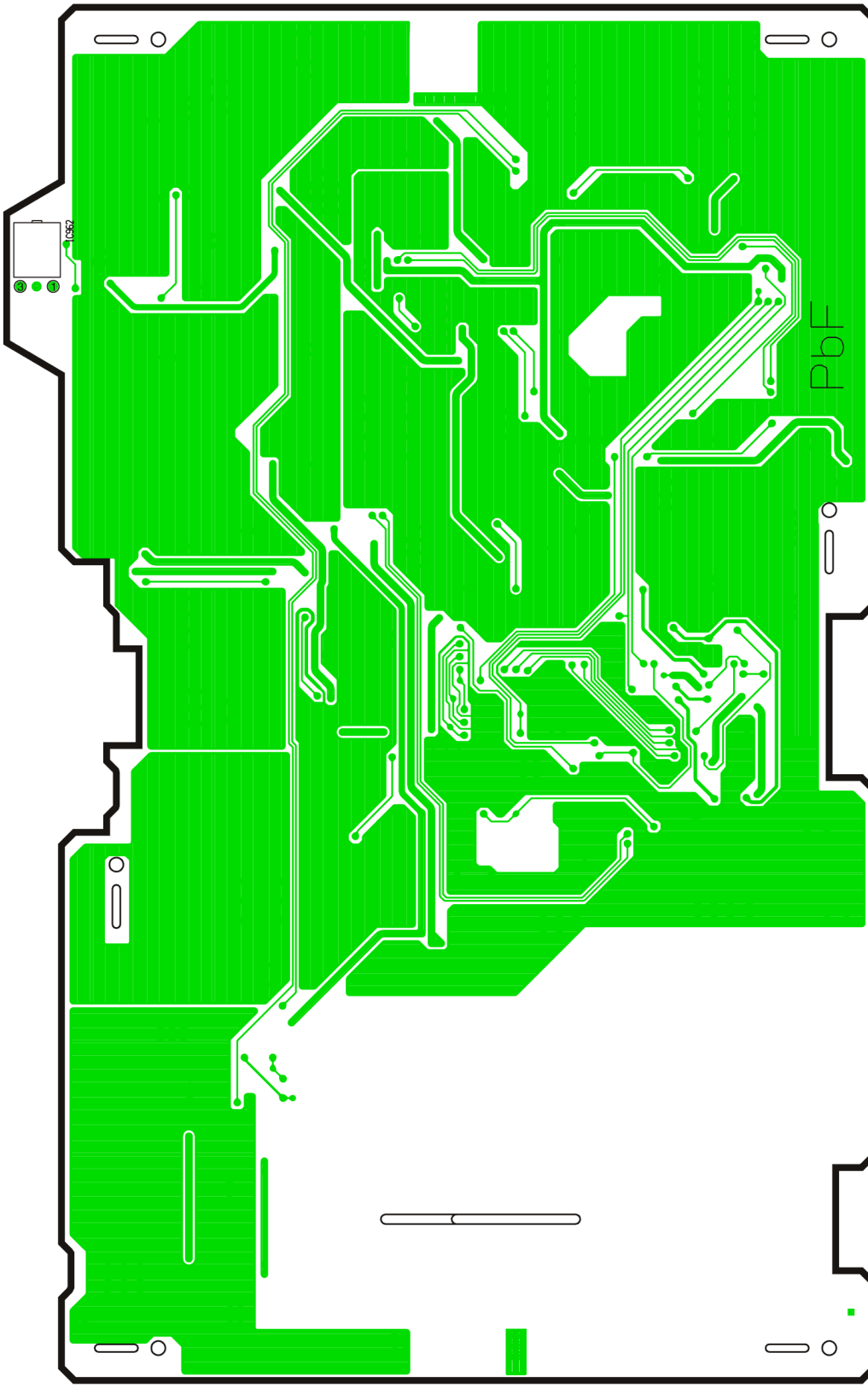

[E-4C927ZB] [Bottom View]

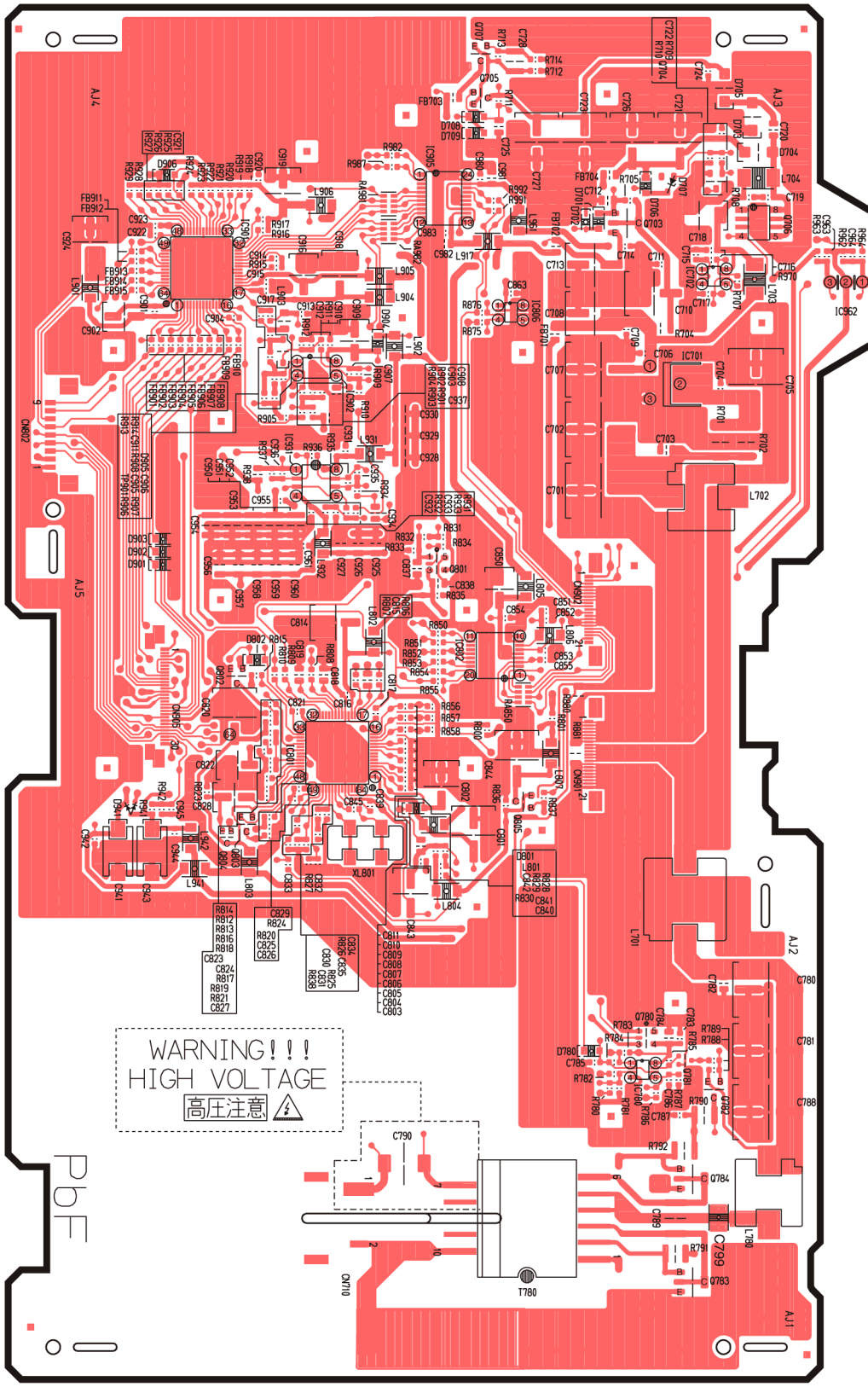

[E-4C927ZB] [Top View]

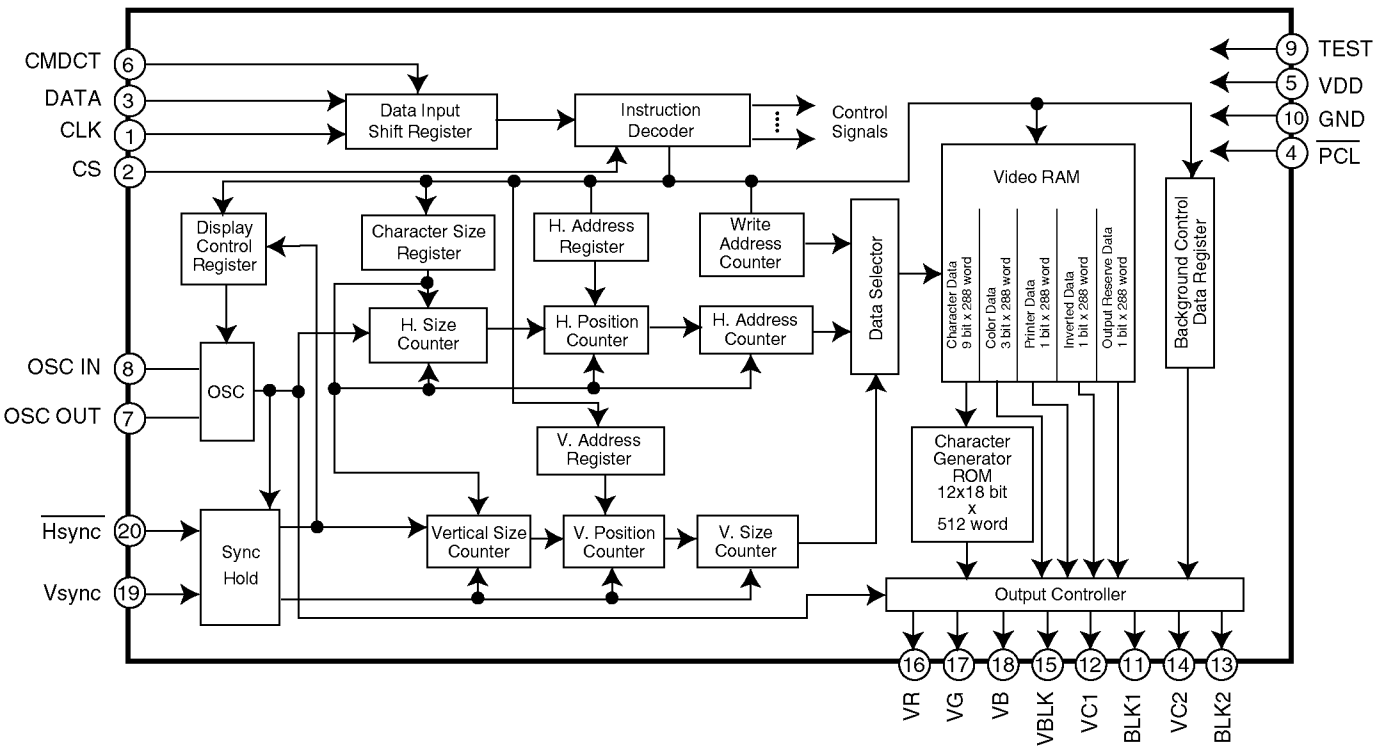
CMDCT
DATA
CLK
CS
OSC IN
OSC OUT
Hsync
Vsync
TEST
VDD
GND
PCL
Data Input Shift Register
Instruction Decoder
Control Signals
Display Control Register
Character Size Register
H. Address Register
Write Address Counter
Data Selector
Video RAM
Character Data 9 bit x 288 word
Color Data 3 bit x 288 word
Printer Data 1 bit x 288 word
Inverted Data 1 bit x 288 word
Output Reserve Data 1 bit x 288 word
Background Control Data Register
H. Size Counter
H. Position Counter
H. Address Counter
OSC
V. Address Register
Character Generator ROM 12x18 bit x 512 word
Sync Hold
Vertical Size Counter
V. Position Counter
V. Size Counter
Output Controller
VR
VG
VB
VBLK
VC1
BLK1
VC2
BLK2