BRIGHT
MENU
ENTER

IC601 AN8065S-E1

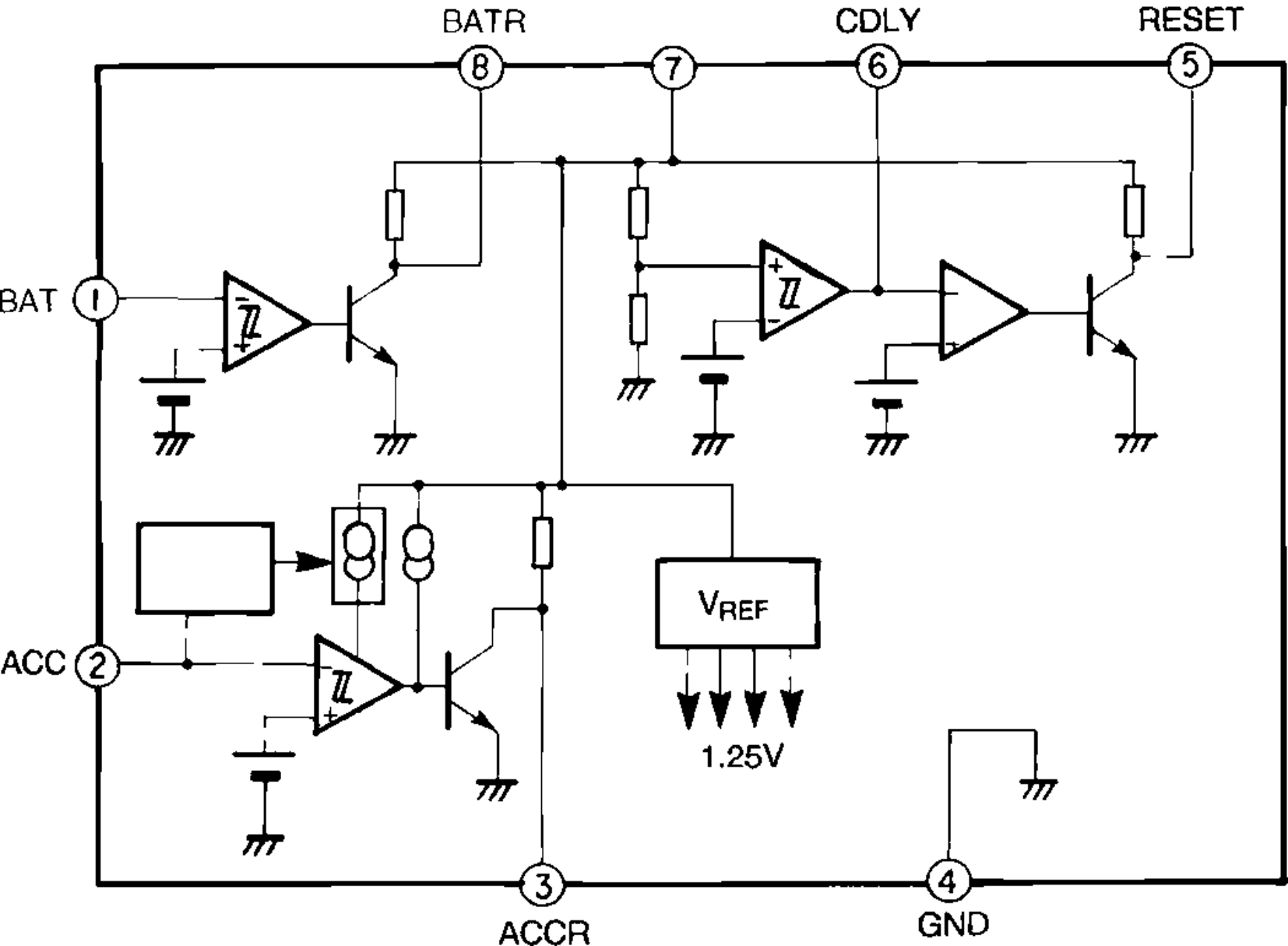

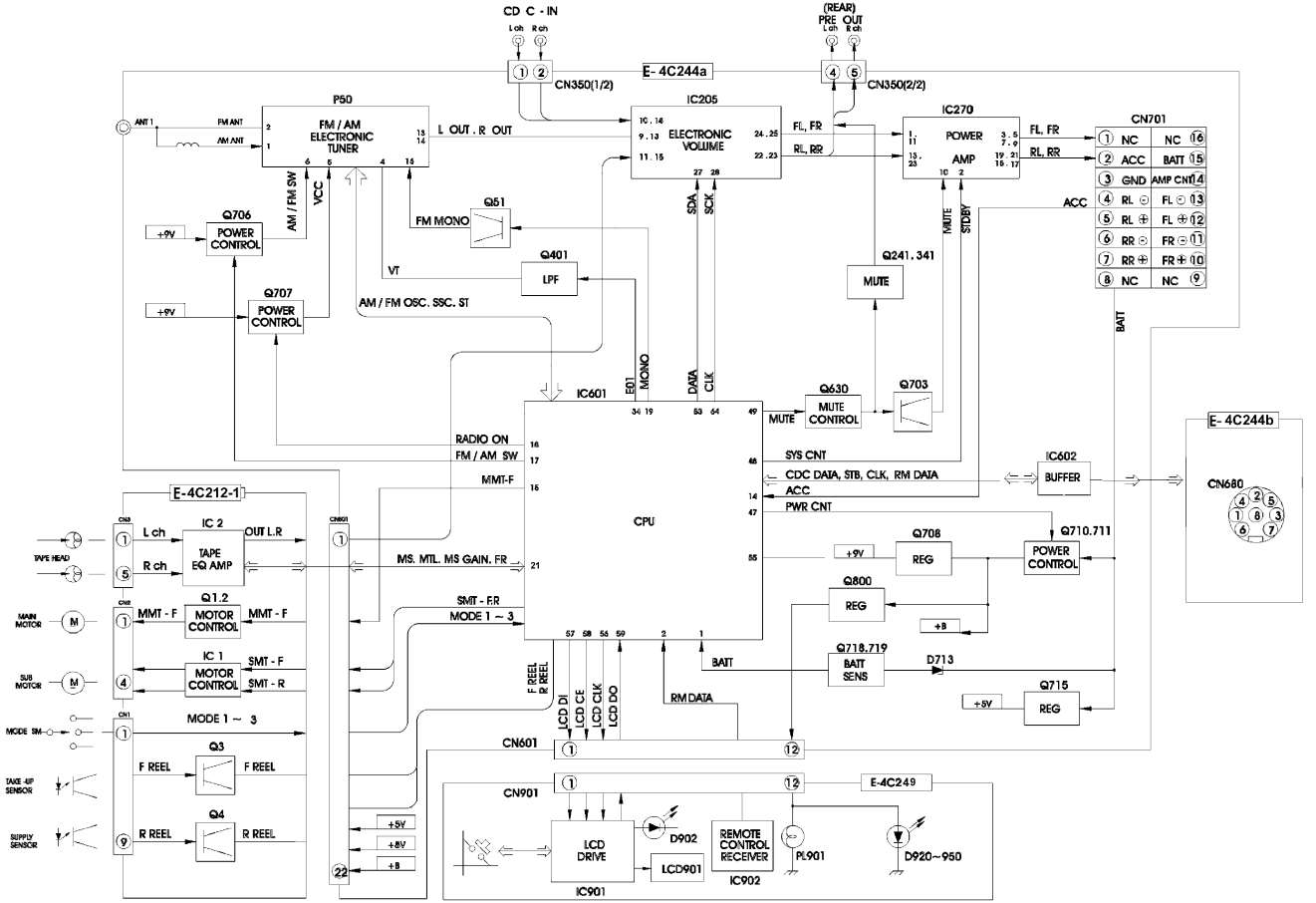
CD C - IN
L ch
R ch
(REAR)
PRE OUT
L ch
R ch
E- 4C244a
CN350(1/2)
CN350(2/2)
P50
FM / AM
ELECTRONIC
TUNER
ANT 1
FM ANT
AM ANT
L OUT . R OUT
IC205
ELECTRONIC
VOLUME
FL, FR
RL, RR
IC270
POWER
AMP
CN701
NC
ACC
GND
RL ⊖
RL ⊕
RR ⊖
RR ⊕
BATT
AMP CNT
FL ⊖
FL ⊕
FR ⊖
FR ⊕
Q706
POWER
CONTROL
+9V
AM / FM SW
VCC
Q51
FM MONO
Q401
LPF
VT
Q707
POWER
CONTROL
AM / FM OSC. SSC. ST
SDA
SCK
MUTE
STDBY
Q241. 341
MUTE
ACC
BATT
IC601
E01
MONO
DATA
CLK
Q630
MUTE
CONTROL
Q703
MUTE
E- 4C244b
CN680
RADIO ON
FM / AM SW
MMT-F
SYS CNT
CDC DATA, STB, CLK, RM DATA
ACC
PWR CNT
IC602
BUFFER
CPU
E- 4C212-1
IC 2
TAPE
EQ AMP
L ch
R ch
OUT L.R
TAPE HEAD
MS. MTL. MS GAIN. FR
Q708
REG
Q710.711
POWER
CONTROL
Q800
REG
+B
Q1.2
MOTOR
CONTROL
MMT - F
MAIN MOTOR
SMT - FR
MODE 1 ~ 3
IC 1
MOTOR
CONTROL
SMT - F
SMT - R
SUB MOTOR
BATT
Q718.719
BATT
SENS
D713
Q715
REG
+5V
F REEL
R REEL
LCD DI
LCD CE
LCD CLK
LCD DO
RM DATA
MODE SW
Q3
F REEL
TAKE-UP SENSOR
Q4
R REEL
SUPPLY SENSOR
CN601
CN901
E-4C249
LCD
DRIVE
IC901
D902
LCD901
REMOTE
CONTROL
RECEIVER
IC902
PL901
D920~950
+5V
+8V
+B

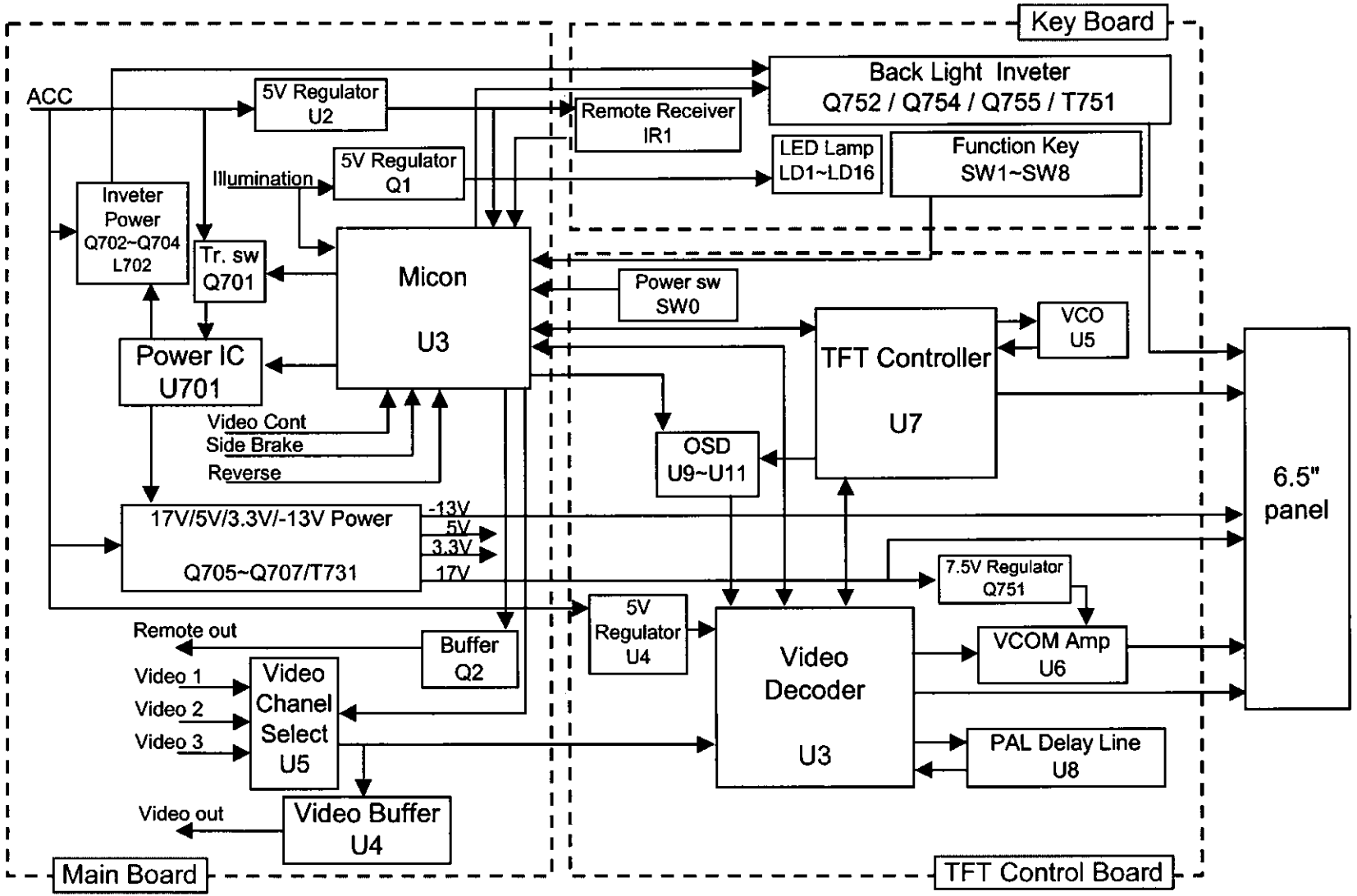

CY-VM6880H MAIN/KEY/TFT BLOCK

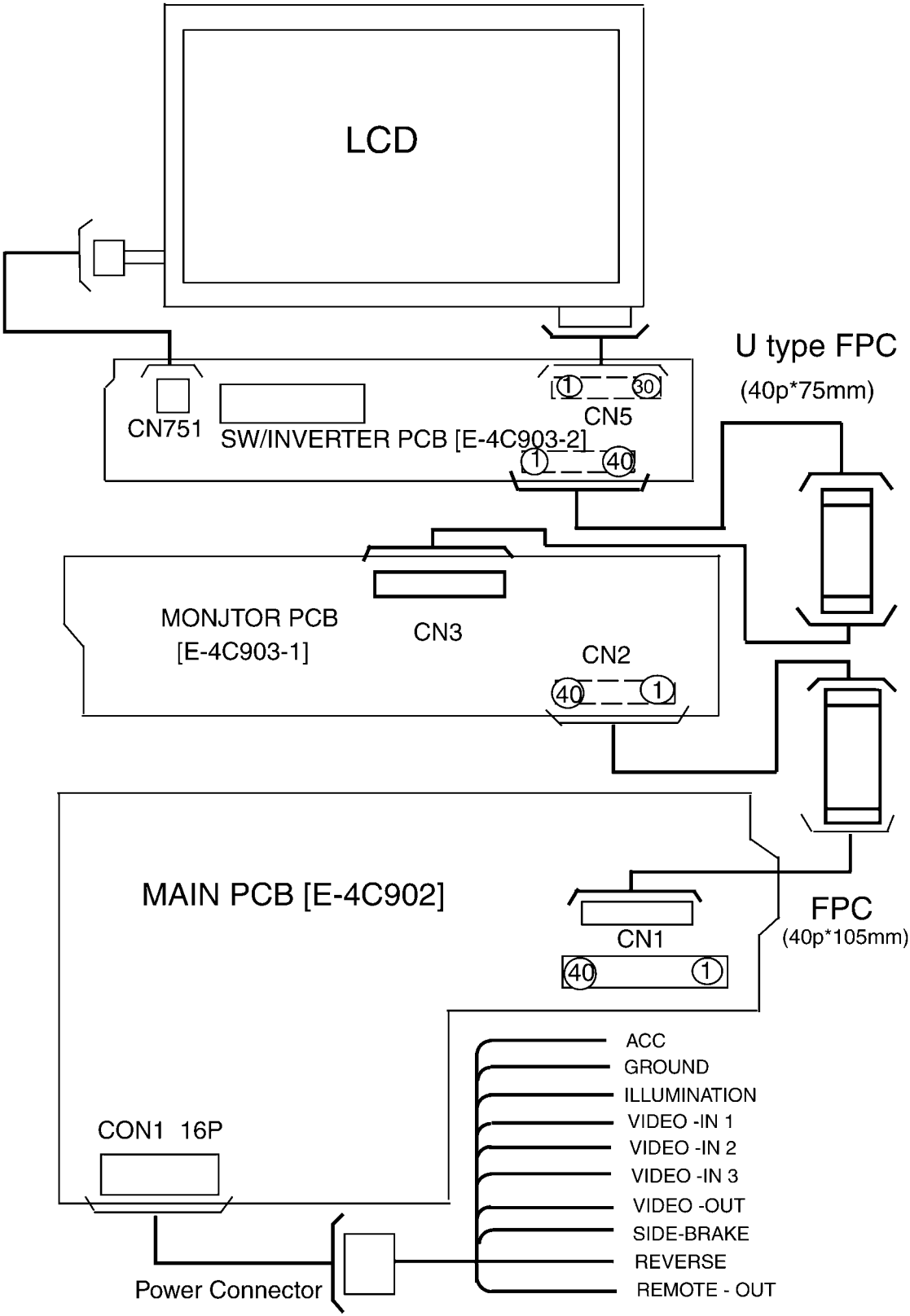
LCD
U type FPC
(40p*75mm)
CN751
SW/INVERTER PCB [E-4C903-2]
1
30
CN5
1
40
MONJTOR PCB
[E-4C903-1]
CN3
CN2
40
1
MAIN PCB [E-4C902]
CN1
40
1
FPC
(40p*105mm)
ACC
GROUND
ILLUMINATION
VIDEO -IN 1
VIDEO -IN 2
VIDEO -IN 3
VIDEO -OUT
SIDE-BRAKE
REVERSE
REMOTE - OUT
CON1 16P
Power Connector

Order No. ACED031204C3

Service Manual

AUTOMOTIVE AFTERMARKET

CY-VM6880H

6.5”W 1 DIN IN-DASH MONITOR

Specifications *

General

[1 DIN]
Power Supply :12VDC (11V~16V)
Test Voltage 14.4V
Current Consumption :Less than 2.5A
Temperature :-10.0°C~+55.0°C

[Display]
LCD :6.5 inch display
Picture size : W 143mm
H 79mm
D 163mm
Pixel : 280800 Pixel
(Vertical 234 x Horizontal 1200)

Dimentions **(WxH*D): 6.7" x 2" x 6.3"
170mm x 50mm x 160mm
Weight : 2.4lbs
1.1kg

* Specifications and the design are subject to possible modification
** without notice due to improvements.
*** Dimentions and weight shown are approximate
Above specifications complay with EIA Standards

⚠ WARNING

This service information is designed for experienced repair technicians only and is not designed for use by the general public. It does not contain warnings or cautions to advise non-technical individuals of potential dangers in attempting to service a product. Products powered by electricity should be serviced or repaired only by experienced professional technicians. Any attempt to service or repair the product or products dealt with in this service information by anyone else could result in serious injury or death.

IMPORTANT SAFETY NOTICE

There are special components used in this equipment which are important for safety. These parts are marked by ⚠ in the Schematic Diagrams, Circuit Board Diagrams, Exploded Views and Replacement Parts List. It is essential that these critical parts should be replaced with manufacturer's specified parts to prevent shock, fire or other hazards. Do not modify the original design without permission of manufacturer.

Panasonic®

© 2003 Matsushita Electric Industrial Co., Ltd. All rights reserved. Unauthorized copying and distribution is a violation of law.

CONTENTS

	Page
1 FEATURES	2
2 REPLACING THE FUSE	2
3 MAINTENANCE	2
4 DIMENSIONS	2
5 WIRING CONNECTION	3
6 BLOCK DIAGRAM	4
7 TERMINALS DESCRIPTION	5
8 PACKAGE AND IC BLOCK DIAGRAM	7
9 REPLACEMENT PARTS LIST (Unit)	10
10 EXPLODED VIEW (Unit)	14
11 WIRING DIAGRAM	15
12 SCHEMATIC DIAGRAM (Main Block)	19
13 SCHEMATIC DIAGRAM (Display Block)	21
14 SCHEMATIC DIAGRAM for printing with letter size	23

1 FEATURES

- 6.5 Inch TFT.
- Video input.
- 3 Video input .
- 1 Video output.
- 1 Remote output.
- PAL/NTSC Mode.
- Video-Cont,Side-Brake, Reverse input.

2 REPLACING THE FUSE

Be sure to use a fuse of the specified rating (3A) when replacing a blown fuse. Fuses with higher capacity ratings,use of any substitute, or connection without a fuse may result in a fire hazard or damage to the unit.

3 MAINTENANCE

Your product is designed and manufactured to ensure a minimum of maintenance. Use a soft cloth for routine exterior cleaning. Never use benzine, or other solvent.

4 DIMENSIONS

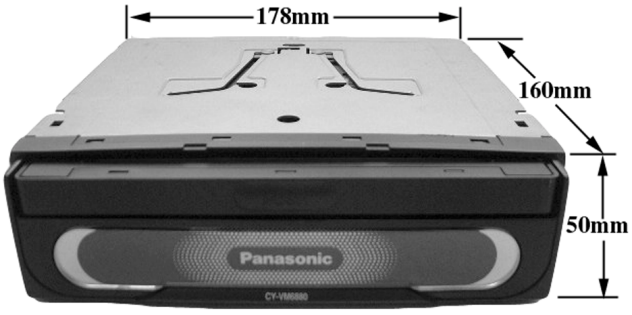

5 WIRING CONNECTION

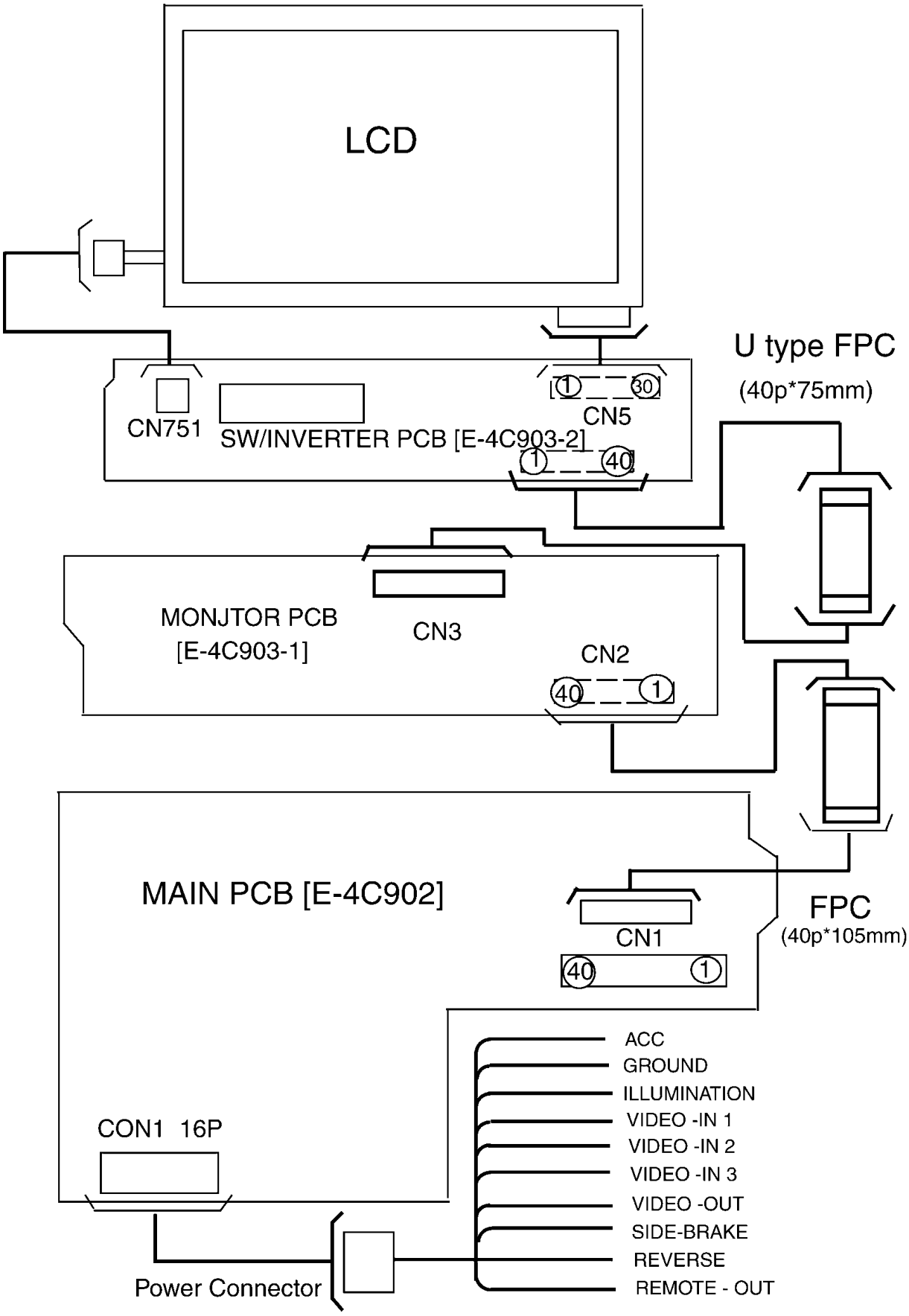

6 BLOCK DIAGRAM

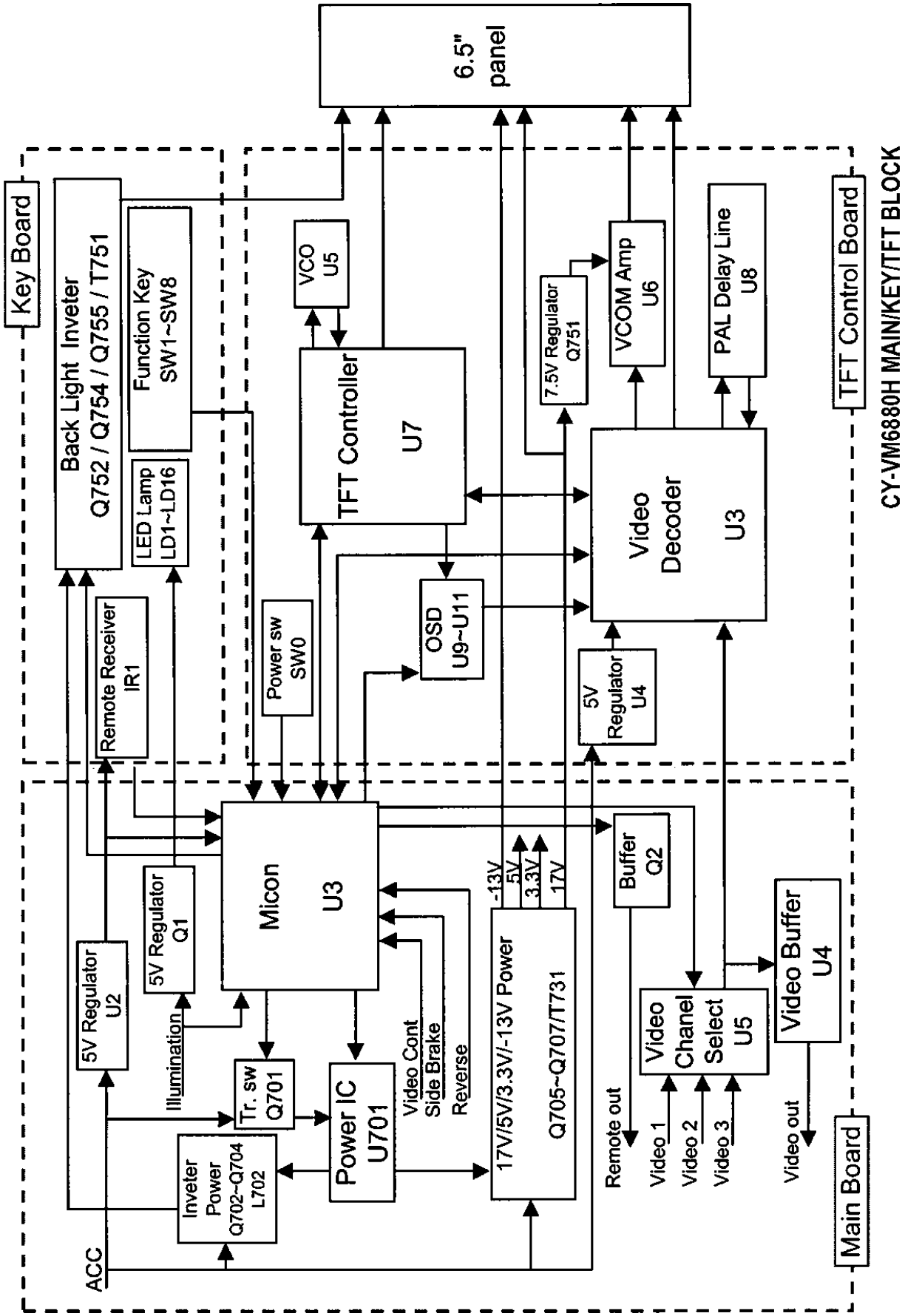

CY-VM6880H MAIN/KEY/TFT BLOCK

7 TERMINALS DESCRIPTION

7.1. Main Block

Ref. No.	Part No.	Part Name & Description	Remarks	
U3 YEAM78F0058				
Pin No.	Port	Descriptions	I/O	Vol.(V)
1	P15	N.C.	----	
2	P16	N.C.	----	
3	P17	N.C.	----	
4	Avss	GND	----	
5	P130	N.C.	----	
6	P131	DIM(Dimmer Control)	O	1.5
7	AVref1	5V Power	I	5
8	P70	RxD	I	0
9	P71	TxD	O	5
10	P72	N.C.	----	
11	P20	N.C.	----	
12	P21	N.C.	----	
13	P22	N.C.	----	
14	P23	N.C.	----	
15	P24	OSDS(OSD IC Chip Select)	O	4.9
16	P25	N.C.	----	
17	P26	OSDD(OSD IC Serial Data)	O	4.9
18	P27	OSDC(OSD IC Shift Clock)	O	4.9
19	P40	SW8(PWR Key)	I	5
20	P41	SW7(ASPECT Key)	I	5
21	P42	SW6(PICT Key)	I	5
22	P43	SW5(BRIGHT Key)	I	5
23	P44	SW4(MENU Key)	I	5
24	P45	SW3(Down Key)	I	5
25	P46	SW2(Up Key)	I	5
26	P47	SW1(ENTER Key)	I	5
27	P50	ZOOM Mode Select	O	0
28	P51	JUST Mode Select	O	0
29	P52	SIDE Mode Select	O	0
30	P53	N.C.	----	
31	P54	BP(Back Light Power Control)	O	5
32	P55	MP(Main Power Control)	O	5
33	Vss1	GND	----	
34	P56	N.C.	----	
35	P57	N.C.	----	
36	P60	SCL	O	4.8
37	P61	SDA	I/O	4.8
38	P62	N.C.	----	
39	P63	N.C.	----	
40	P64	N.C.	----	0
41	P65	REM(Remote Output)	O	
42	P66	N.C.	----	
43	P67	N.C.	----	
44	P30	N.C.	----	
45	P31	MBLK(Main Screen Blanking)		0
46	P32	N.C.	----	
47	P33	N.C.	----	
48	P34	N.C.	----	
49	P35	N.C.	----	
50	P36	N.C.	----	
51	P37	N.C.	----	
52	P120	REV(Reverse Sense)	I	0
53	P121	N.C.	----	
54	P122	N.C.	----	
55	P123	ILS(ILLUMINATION Sense)	I	0
56	P124	VIS(Video Control Input)	I	0
57	P125	CTC(ChaneL Control C)	O	0
58	P126	CTB(ChaneL Control B)	O	0
59	P127	CTA(ChaneL Control A)	O	0
60	RESET	RST(RESET)	I	5
61	P00	RMD(Remote Input Detect)	I	4.8
62	P01	VSY(Vertical Sync)	I	
63	P02	SW0(Monitor open/close SW)	I	5.2
64	P03	SBR(Side Brake Detect)		1.6
65	P04	CS(Composite Sync)	I	
66	P05	N.C.	----	5
67	Vss0	GND	----	
68	Vdd1	5V Power	I	5
69	X2	Crystal Terminal 2	I	
70	X1	Crystal Terminal 1	I	
71	IC(Vpp)	IC(Vpp)		0
72	XT2	N.C.	----	
73	XT1	N.C.	----	
74	Vdd0	5V Power	I	5
75	AVref0	5V Power	I	5
76	P10	Power Operating Range Detect	I	
77	P11	N.C.	----	
78	P12	N.C.	----	
79	P13	N.C.	----	
80	P14	N.C.	----	

7.2. Display Block

Ref. No.	Part No.	Part Name & Description	Remarks	
U7 YEAMTC200G02				
			I/O	Vol.(V)
1	SYNC IN	GND	__	0
2	HD IN	HD Input	I	0
3	SIDE 2	GND	__	0
4	SIDE 1	Side 1 Signal Input	I	0
5	VD IN	VD Input	I	3.1
6	HD OUT	Horizon Same Time Signal Out	O	2.9
7	VD OUT	Vertical Same Time Signal Out	O	3.1
8	BLK	BLK Signal Output	O	0
9	VPOS3	Vertical Expression Possition	I	3.2
		Cuts Terminal 3		
10	VPOS2 (NC)	__	__	__
11	VPOS1	Vertical Expression Possition	I	3.2
		Cuts Terminal 1		
12	ZOOM	ZOOM Signal Input	I	0
13	U/D (NC)	__	__	__
14	POL	Image Vertical Cuts Terminal 1	O	1.6
15	INT/EXT	GND	I	0
16	CPV	Gate Driver Clock Pals	O	0.5
17	OEV3	Gate Output	O	0
18	OEV2	Gate Output	O	0
19	OEV1	Gate Output	O	0
20	STV1	Gate Driver Seek Start Pals 1	I/O	0
21	OEH	Source Driver	O	0
22	ZOOMC	ZOOM Seting	I	0.4
23	STH1	Source Start Pals 1	I/O	0
24	STH2	Source Start Pals 2	I/O	0
25	CPH3	Source Driver Clock Pals 3	O	1.6
26	STV2	Gate Driver Seek Start Pals 1	I/O	0
27	CPH2	Source Driver Clock Pals 2	O	1.6
28	R/L	Connection 3.3V	I	3.2
29	CPH1	Source Driver Clock Pals 1	O	0
30	HDOT2	HDOT 1 Seting Input	I	3.2
31	JUST (NC)	__	__	__
32	POS SET	Expression Possition Setting	I	3.2
33	PD	Phase Compared to Output Terminal	O	1.6
34	OVD (NC)	__	__	__
35	A Vdd	Power Terminal(Analog) 3V		3.2

Ref. No.	Part No.	Part Name & Description	Remarks	
36	VCO I	VCO Input Terminal	I	1.5
37	VCO 0	VCO Output Terminal	O	1.5
38	A GND	Ground	__	0
39	RESET	Reset Terminal	I	3.5
		Signal Input (4:3 Possition)		
40	HDOT1	GND	I	0
41	UONS	Screen Pulling Extending	I	0
		Signal Input (4:3 Possition)		
42	HPOS4 (NC)	__	__	__
43	HPOS3 (NC)	__	__	__
44	HPOS2	Horizon Expression Possition	I	0
		Cuts Terminal 3		
45	HPOS1 (NC)	__	__	__
46	PNI (NC)	__	__	__
47	D Vdd	Power Terminal(Analog)	__	3.2
48	D GND	Ground Terminal (Digital)	__	0

8 PACKAGE AND IC BLOCK DIAGRAM

8.1. Main Block

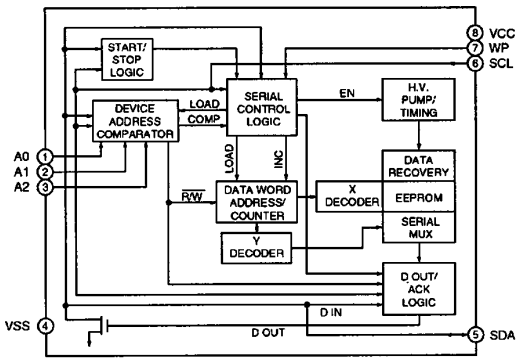

U6 YEAMS24C02A

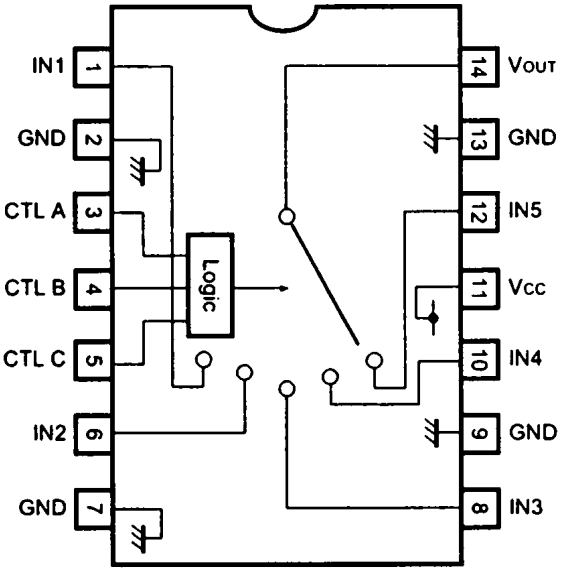

U5 YEAMBA7649AF

U14 YEAMBD4729G

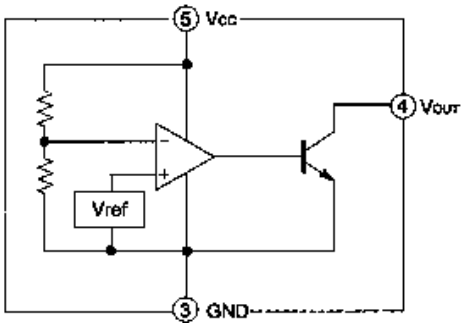

8.2. Monitor Block

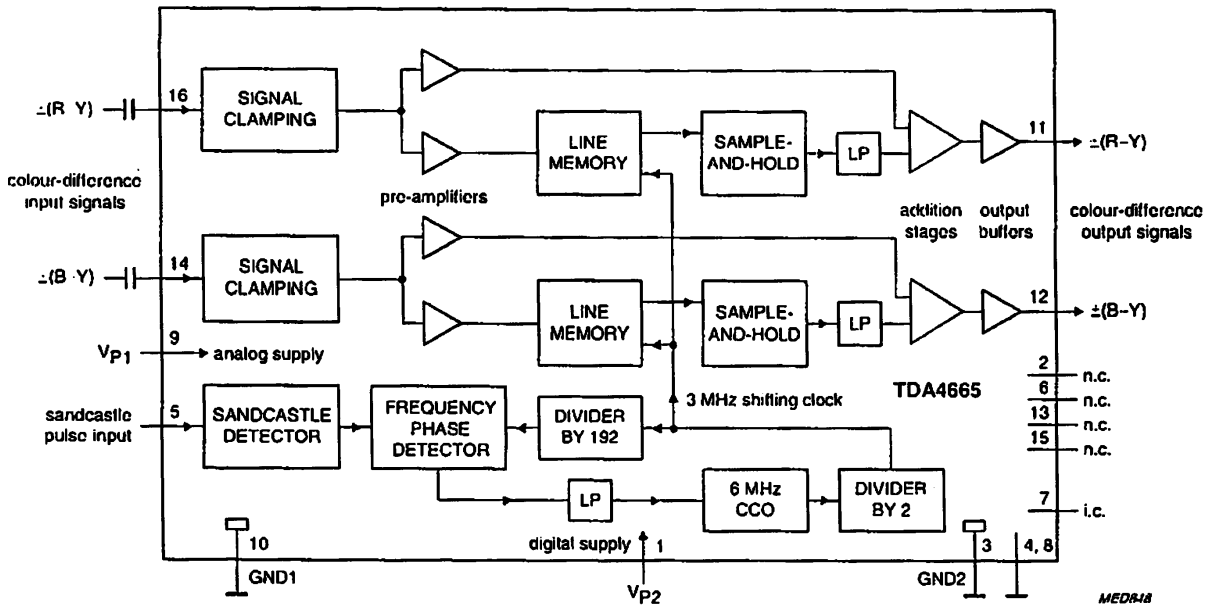

U8 C0ZBZ000432

U6 YEAMNJM3414AM

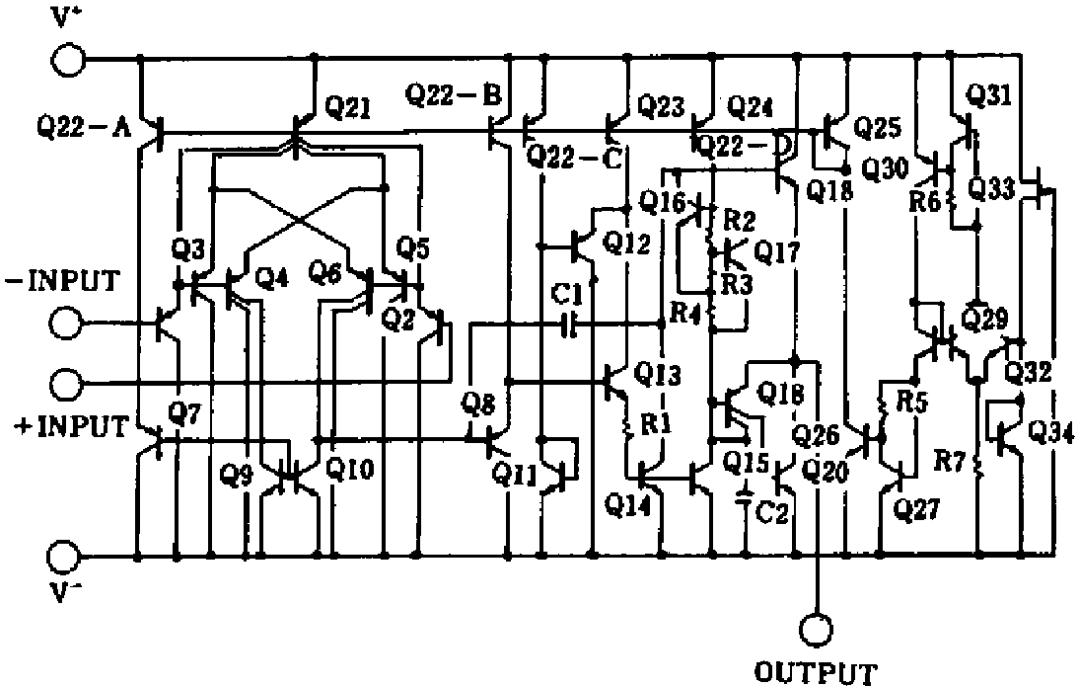

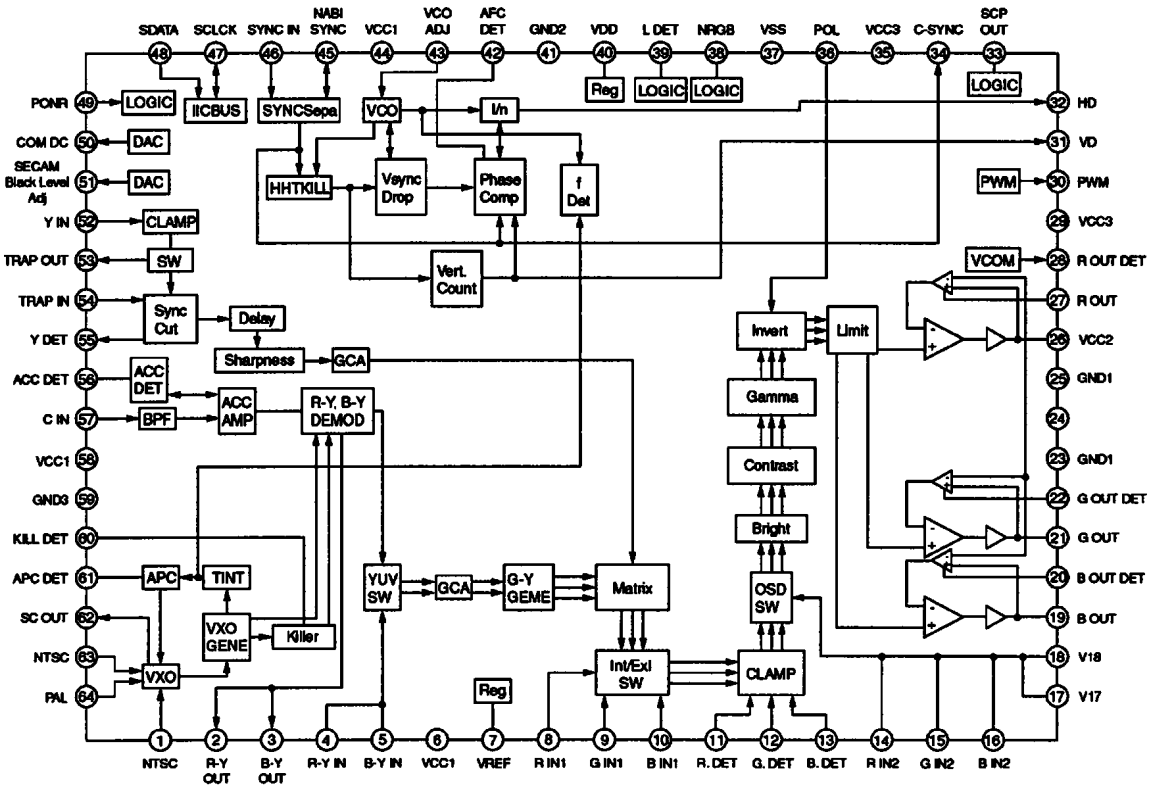
SDATA
SCLCK
SYNC IN
NABI SYNC
VCC1
VCO ADJ
AFC DET
GND2
VDD
L DET
NRGB
VSS
POL
VCC3
C-SYNC
SCP OUT
PONR
COM DC
SECAM Black Level Adj
Y IN
TRAP OUT
TRAP IN
Y DET
ACC DET
C IN
VCC1
GND3
KILL DET
APC DET
SC OUT
NTSC
PAL
LOGIC
IICBUS
SYNCSepa
VCO
I/n
Reg
LOGIC
LOGIC
LOGIC
DAC
DAC
CLAMP
SW
HHTKILL
Vsync Drop
Phase Comp
f Det
Vert. Count
Sync Cut
Delay
Sharpness
GCA
ACC DET
ACC AMP
BPF
R-Y, B-Y DEMOD
APC
TINT
VXO GENE
Killer
VXO
YUV SW
GCA
G-Y GEME
Matrix
Int/Ext SW
Reg
Invert
Limit
Gamma
Contrast
Bright
OSD SW
CLAMP
PWM
VCOM
HD
VD
PWM
VCC3
R OUT DET
R OUT
VCC2
GND1
GND1
G OUT DET
G OUT
B OUT DET
B OUT
V18
V17
NTSC
R-Y OUT
B-Y OUT
R-Y IN
B-Y IN
VCC1
VREF
R IN1
G IN1
B IN1
R. DET
G. DET
B. DET
R IN2
G IN2
B IN2

U3 **AN2546FH**

9 REPLACEMENT PARTS LIST (Unit)

Note:

1. Be sure to make your orders of replacement parts according to this list.
2. Important safty notice: Component , indentified by ⚠ mark have special characteristics important for safety. when replacing any of these components, use only manufacturer's specified parts.
3. Location keys in the remarks column indicates the general location of the parts shown in the exploded drawing. as in a load map.
4. The marking (RTL) indicates that Retention Time is **limited** for this item. After the discontinuation of assembly in production, the item will continue to be availability is dependent on the type of assembly, and in accordance with the laws governing part and product retention. Aft the end of this period, the assembly will no longer be available.
5. "T" marks in remarks colum are indicated supply parts of TAMACO.

- **Order intake period is basically six months after the first shipment**

Ref. No.	Part No.	Part Name & Description	Remarks
1.IC's and Transistors			
MAIN BLOCK [E-4C902]			
Q1	2SD2403T1	Transistor	T
Q2	YEANC114YKT	Transistor	T
Q701	XN0438100L	Transistor	T
Q702	B1GKGDAA0001	Transistor	T
Q703	B1GDCFJJ0025	Transistor	T
Q704	YEAN2SJ506STR	Transistor	T
Q705	YEAN2SJ506STR	Transistor	T
Q706	B1GDCFJJ0025	Transistor	T
Q707	B1GKGDAA0001	Transistor	T
Q731	2SD601R	Transistor	T
U1	YEAMBD4729G	IC	T
U2	YEAMPJ78L05AC	IC	T
U3	YEAM78F0058	IC	T
U4	YEAMM2267MT1	IC	T
U5	YEAMBA7649AF	IC	T
U6	YEAMS24C02A	IC	T
U701	YEAMMB3775FP	IC	T
MONITOR BLOCK [E-4C903-1]			
Q1	YEANRK7002	Transistor	T
Q8	YEANRK7002	Transistor	T
Q751	YEANIMZ1TX	Transistor	T
U3	AN2546FH-A	IC	T
U4	YEAMBA178M05	IC	T
U5	YEAMM2107FT1	IC	T
U6	YEAMNJM3414AM	IC	T
U7	YEAMTC200G02	IC	T
U8	C0ZBZ0000432	IC	T
U9	YEAM74LCX08FN	IC	T
U10	YEAM74LCX02FN	IC	T
U11	YEAMMB90099	IC	T
U12	YEAMTC7W53FU	IC	T
SW/INVERTER BLOCK [E-4C903-2]			
Q752	XN0438100L	Transistor	T
Q754	2SD2403T1	Transistor	T
Q755	2SD2403T1	Transistor	T
IR1	PNA4602M01MC	IC	T
2. Diodes			
MAIN BLOCK [E-4C902]			
D1	YEAD1SS355T1	Diode	T
D2	YEAD1N5404UT	Silicon Diode	T
D3	YEAD1SS355T1	Diode	T
D200	YEAD1SS355T1	Diode	T
D701	YEADSS14VZ	Diode	T
D731	B0JCMG000010	Diode	T
D732	YEADSS14VZ	Diode	T
D733	YEADSS14VZ	Diode	T
D734	B0JCMG000010	Diode	T
D99	YEAD1S40T	Diode	T
Z1	YEADUDZ56BT	Zener Diode	T
Z2	YEADUDZ56BT	Zener Diode	T
Z3	YEADUDZ56BT	Zener Diode	T
Z5	ERZG07DK220T1	ZNR	T
Z6	YEADUDZ56BT	Zener Diode	T
Z7	YEADUDZ56BT	Zener Diode	T
Z8	YEADUDZ56BT	Zener Diode	T
Z9	YEADUDZ56BT	Zener Diode	T
Z701	YEADUDZS51BT	Zener Diode	T
MONITOR BLOCK [E-4C903-1]			
D5	MA2X33800L	Diode	T
D6	YEAD1SS355T1	Diode	T
D7	YEAD1SS355T1	Diode	T
SW/INVERTER BLOCK [E-4C903-2]			
D9	YEADRB501VT	Diode	T
D10	YEADRB501VT	Diode	T
D751	YEAD1SS355T1	Diode	T
LD1	YEADSEC1401T	Diode	T
LD2	YEADSEC1401T	Diode	T
LD3	YEADSEC1401T	Diode	T
LD4	YEADSEC1401T	Diode	T
LD5	YEADSEC1401T	Diode	T
LD6	YEADSEC1401T	Diode	T
LD7	YEADSEC1401T	Diode	T
LD8	SML210VT	LED (RED)	T
LD9	SML210VT	LED (RED)	T
LD10	YEADSEC1401T	Diode	T
LD11	YEADSEC1401T	Diode	T
LD12	YEADSEC1401T	Diode	T
LD13	YEADSEC1401T	Diode	T
LD14	YEADSEC1401T	Diode	T
LD15	YEADSEC1401T	Diode	T
LD16	YEADSEC1401T	Diode	T
Z92	YEADUDZ56BT	Zener Diode	T
Z93	YEADUDZ56BT	Zener Diode	T
Z94	YEADUDZ56BT	Zener Diode	T
Z95	YEADUDZ56BT	Zener Diode	T
Z96	YEADUDZ56BT	Zener Diode	T
Z97	YEADUDZ56BT	Zener Diode	T
Z98	YEADUDZ56BT	Zener Diode	T
Z99	YEADUDZ56BT	Zener Diode	T
3.Capacitors			
MAIN BLOCK [E-4C902]			
C1	ECUV1C104KBV	Ceramic 0.1MFD 16WV	T
C10	ECUV1C105KBN	Ceramic 1MFD 16WV	T
C2	ECUV2A104KBM	Ceramic 0.1MFD100WV	T
C3	ECUV1C104KBV	Ceramic 0.1MFD 16WV	T
C4	ECUV1C104KBV	Ceramic 0.1MFD 16WV	T
C5	ECUV1C104KBV	Ceramic 0.1MFD 16WV	T
C6	ECUV1C105KBN	Ceramic 1MFD 16WV	T
C7	ECUV1C105KBN	Ceramic 1MFD 16WV	T
C8	ECUV1C105KBN	Ceramic 1MFD 16WV	T
C9	ECUV1C105KBN	Ceramic 1MFD 16WV	T
C11	ECUV1C105KBN	Ceramic 1MFD 16WV	T
C12	ECUV1C104KBV	Ceramic 0.1MFD 16WV	T
C13	YECUU1E106ZF	Ceramic 10MFD 25WV	T
C14	ECUV1H104KBV	Ceramic 0.1MFD 50WV	T

Ref. No.	Part No.	Part Name & Description	Remarks
C15	ECUV1H104KBN	Ceramic 0.1MFD 50WV	T
C16	ECUV1H330JCN	Ceramic 33PF 50WV	T
C96	ECUV1H104KBV	Ceramic 0.1MFD 50WV	T
C97	ECUV1H104KBV	Ceramic 0.1MFD 50WV	T
C98	ECUV1H104KBV	Ceramic 0.1MFD 50WV	T
C99	ECUV1H104KBV	Ceramic 0.1MFD 50WV	T
C100	ECUV1H104KBV	Ceramic 0.1MFD 50WV	T
C101	ECUV1H104KBV	Ceramic 0.1MFD 50WV	T
C701	ECUV1A225KBN	Ceramic 22MFD 10WV	T
C702	ECUV1C105KBN	Ceramic 1MFD 16WV	T
C703	ECUV1H104KBV	Ceramic 0.1MFD 50WV	T
C704	ECEV1CA100SR	Electrolytic 47PF 16WV	T
C705	ECUV1H103KBN	Ceramic 0.01MFD 50WV	T
C706	EEVFK1C221P	Electrolytic 220MFD 16WV	T
C707	EEVFK1C221P	Electrolytic 220MFD 16WV	T
C708	YECUU1H475KX	Ceramic 4.7MFD 50WV	T
C709	EEVFK1C101P	Electrolytic 100MFD 16WV	T
C710	YECUU1H475KX	Ceramic 4.7MFD 50WV	T
C711	YECUU1H475KX	Ceramic 4.7MFD 50WV	T
C712	EEVFK1C221P	Electrolytic 220MFD 16WV	T
C713	ECUV1H472KBV	Ceramic 4700PF 50WV	T
C714	YECUU1H475KX	Ceramic 4.7MFD 50WV	T
C715	EEVFK1C101P	Electrolytic 100MFD 16WV	T
C716	YECUU1H475KX	Ceramic 4.7MFD 50WV	T
C717	EEVFK1C101P	Electrolytic 100MFD 16WV	T
C718	EEVFK1C221XP	Electrolytic 220MFD 16WV	T
C719	ECUV1H104KBN	Ceramic 0.1MFD 50WV	T
C720	ECUV1C105KBN	Ceramic 1MFD 16WV	T
C721	ECUV1H103KBV	Ceramic 0.01MFD 50WV	T
C722	ECUV1H331KBV	Ceramic 330PF 50WV	T
C731	EEVFC1E330P	Electrolytic 33MFD 25WV	T
C732	ECUV1H104KBV	Ceramic 0.1MFD 50WV	T
C733	ECUV1H104KBV	Ceramic 0.1MFD 50WV	T
C734	EEVFC1E330P	Electrolytic 33MFD 25WV	T
C735	EEVFK0J221P	Electrolytic 220MFD 6.3WV	T
C736	ECUV1H104KBV	Ceramic 0.1MFD 50WV	T
C737	ECUV1H104KBV	Ceramic 0.1MFD 50WV	T
C738	EEVFK0J221P	Electrolytic 220MFD 6.3WV	T
C739	EEVFK0J221P	Electrolytic 220MFD 6.3WV	T
C740	ECUV1H104KBV	Ceramic 0.1MFD 50WV	T
C741	ECUV1H104KBV	Ceramic 0.1MFD 50WV	T
C742	EEVFK0J221P	Electrolytic 220MFD 6.3WV	T
C743	EEVFC1C470P	Electrolytic 47MFD 16WV	T
C744	ECUV1H104KBV	Ceramic 0.1MFD 50WV	T
C745	ECUV1H104KBV	Ceramic 0.1MFD 50WV	T
C746	EEVFC1C470P	Electrolytic 47MFD 16WV	T
C747	EEVFC1C470P	Electrolytic 47MFD 16WV	T
C750	ECUV1H103KBV	Ceramic 0.01MFD 50WV	T
C751	ECUV1H103KBV	Ceramic 0.01MFD 50WV	T
C752	ECUV1H103KBV	Ceramic 0.01MFD 50WV	T
C753	ECUV1H103KBV	Ceramic 0.01MFD 50WV	T
C754	ECUV1H103KBV	Ceramic 0.01MFD 50WV	T
C755	ECUV1H103KBV	Ceramic 0.01MFD 50WV	T
C756	ECUV1H103KBV	Ceramic 0.01MFD 50WV	T
C757	ECUV1H103KBV	Ceramic 0.01MFD 50WV	T
C760	ECUV1H104KBV	Ceramic 0.1MFD 50WV	T
E1	ECEA1VU101B	Electrolytic 100PF 35WV	T
E3	ECEA1CU471B	Electrolytic 470MFD 16WV	T
E4	ECEA1CKS101BV	Electrolytic 100PF 16WV	T
E6	ECEA1CKS101BV	Electrolytic 100PF 16WV	T
E7	ECEA0JKS101BV	Electrolytic 100MFD 6.3WV	T
E8	ECEA0JKS101BV	Electrolytic 100MFD 6.3WV	T
E9	EEVFK1C101P	Electrolytic 100MFD 16WV	T
MONITOR BLOCK [E-4C903-1]			
C1	ECUV1H104KBV	Ceramic 0.1MFD 50WV	T
C8	ECUV1H104KBV	Ceramic 0.1MFD 50WV	T
C9	ECUV1H104KBV	Ceramic 0.1MFD 50WV	T
C10	ECUV1H104KBV	Ceramic 0.1MFD 50WV	T
C11	ECUV1H104KBV	Ceramic 0.1MFD 50WV	T
C12	ECUV1H104KBV	Ceramic 0.1MFD 50WV	T
C13	ECUV1H104KBV	Ceramic 0.1MFD 50WV	T

Ref. No.	Part No.	Part Name & Description	Remarks
C14	ECUV1H104KBV	Ceramic 0.1MFD 50WV	T
C15	ECUV1H104KBV	Ceramic 0.1MFD 50WV	T
C17	ECUV1H104KBV	Ceramic 0.1MFD 50WV	T
C18	ECUV1H470JCV	Ceramic 47PF 50WV	T
C19	ECUV1H821KBV	Ceramic 820PF 50WV	T
C20	ECUV1A225KBN	Ceramic 22MFD 10WV	T
C21	ECUV1E474KBN	Ceramic 0.47MFD 25WV	T
C22	ECUV1H223KBV	Ceramic 0.022MFD 50WV	T
C23	ECUV1H223KBV	Ceramic 0.022MFD 50WV	T
C24	ECUV1H223KBV	Ceramic 0.022MFD 50WV	T
C27	ECUV1H101KBV	Ceramic 100PF 50WV	T
C34	ECUV1C105KBN	Ceramic 1MFD 16WV	T
C35	ECUV1C105KBN	Ceramic 1MFD 16WV	T
C36	ECUV1C105KBN	Ceramic 1MFD 16WV	T
C38	ECUV1C105KBN	Ceramic 1MFD 16WV	T
C42	ECUV1C105KBN	Ceramic 1MFD 16WV	T
C43	ECUV1C105KBN	Ceramic 1MFD 16WV	T
C46	ECUV1H221KBV	Ceramic 220PF 50WV	T
C47	ECUV1C105KBN	Ceramic 1MFD 16WV	T
C48	ECUV1C105KBN	Ceramic 1MFD 16WV	T
C49	ECUV1C105KBN	Ceramic 1MFD 16WV	T
C50	ECUV1C105KBN	Ceramic 1MFD 16WV	T
C51	ECUV1C105KBN	Ceramic 1MFD 16WV	T
C52	ECUV1C105KBN	Ceramic 1MFD 16WV	T
C53	ECUV1C105KBN	Ceramic 1MFD 16WV	T
C55	ECUV1C105KBN	Ceramic 1MFD 16WV	T
C56	ECUV1H220JCV	Ceramic 22PF 50WV	T
C57	ECUV1H270JCV	Ceramic 27PF 50WV	T
C58	ECUV1A225KBN	Ceramic 22MFD 10WV	T
C59	ECUV1H103KBV	Ceramic 0.01MFD 50WV	T
C60	ECUV1H561KBV	Ceramic 560PF 50WV	T
C61	ECUV1A225KBN	Ceramic 22MFD 10WV	T
C64	YECUU1E106ZF	Ceramic 10MFD 25WV	T
C65	ECUV1H104KBV	Ceramic 0.1MFD 50WV	T
C66	ECUV1C105KBN	Ceramic 1MFD 16WV	T
C67	YECUU1H475KX	Ceramic 4.7MFD 50WV	T
C68	ECUV1H680JCV	Ceramic 68PF 50WV	T
C69	ECUV1H104KBV	Ceramic 0.1MFD 50WV	T
C70	ECUV1A225KBN	Ceramic 22MFD 10WV	T
C72	ECUV1A225KBN	Ceramic 22MFD 10WV	T
C73	ECUV1A225KBN	Ceramic 22MFD 10WV	T
C74	ECUV1C105KBN	Ceramic 1MFD 16WV	T
C75	ECUV1C105KBN	Ceramic 1MFD 16WV	T
C76	ECUV1A225KBN	Ceramic 22MFD 10WV	T
C77	ECUV2A104KBM	Ceramic 0.1MFD100WV	T
C79	YECUU1E106ZF	Ceramic 10MFD 25WV	T
C80	ECUV1A225KBN	Ceramic 22MFD 10WV	T
C81	ECUV1A225KBN	Ceramic 22MFD 10WV	T
C82	ECUV1A225KBN	Ceramic 22MFD 10WV	T
C95	ECUV1C105KBN	Ceramic 1MFD 16WV	T
C917	ECUV1H104KBV	Ceramic 0.1MFD 50WV	T
C918	EEVFK1C101P	Electrolytic 100MFD 16WV	T
C929	ECUV1H104KBV	Ceramic 0.1MFD 50WV	T
T6	YECSW1C226MS	Tantal 22MFD 16WV	T
T7	YECSW1A476MS	Tantal 47MFD 10WV	T
T9	YECSW1C226MS	Tantal 22MFD 16WV	T
T10	YECSW1A476MS	Tantal 47MFD 10WV	T
T11	YECSW1C226MS	Tantal 22MFD 16WV	T
SW/INVERTER BLOCK [E-4C903-2]			
C37	ECUV1C105KBN	Ceramic 1MFD 16WV	T
C54	ECUV1C105KBN	Ceramic 1MFD 16WV	T
C63	YECUU1H475KX	Ceramic 4.7MFD 50WV	T
C78	YECUU1E106ZF	Ceramic 10MFD 25WV	T
C94	ECUV1H101KBV	Ceramic 100PF 50WV	T
C750	ECEV1AA101SP	Electrolytic 100PF 10WV	T
C756	ECHU1H184JC9	Ceramic 0.18MFD 50WV	T
T2	YECSW1C226MS	Tantal 22MFD 16WV	T
T14	YECSW1C226MS	Tantal 22MFD 16WV	T
			T
4. Resistors			

Ref. No.	Part No.	Part Name & Description	Remarks
MAIN BLOCK [E-4C902]			
R1	ERJ3GEYJ302V	Chip 3k ohms 1/16W	T
R2	ERJ3GEYJ103V	Chip 10k ohms 1/16W	T
R3	ERJ3GEYJ103V	Chip 10k ohms 1/16W	T
R4	ERJ3GEY0R00V	Chip 0 ohms 1/16W	T
R5	ERJ3GEYJ103V	Chip 10k ohms 1/16W	T
R6	ERJ3GEYJ101V	Chip 100 ohms 1/16W	T
R10	ERJ3GEYJ102V	Chip 1k ohms 1/16W	T
R11	ERJ3GEYJ102V	Chip 1k ohms 1/16W	T
R12	ERJ3GEYJ102V	Chip 1k ohms 1/16W	T
R13	ERJ3GEYJ102V	Chip 1k ohms 1/16W	T
R14	ERJ3GEYJ473V	Chip 47k ohms 1/16W	T
R15	ERJ3GEYJ103V	Chip 10k ohms 1/16W	T
R16	ERJ3GEYJ512V	Chip 5.1k ohms 1/4W	T
R17	ERJ3GEYJ512V	Chip 5.1k ohms 1/4W	T
R18	ERJ3GEYJ512V	Chip 5.1k ohms 1/4W	T
R19	ERJ3GEYJ750V	Chip 75 ohms 1/4W	T
R20	ERJ6GEYJ750V	Chip 75 ohms 1/10W	T
R21	ERJ3GEYJ750V	Chip 75 ohms 1/4W	T
R22	ERJ3GEYJ750V	Chip 75 ohms 1/4W	T
R24	ERJ3GEYJ202V	Chip 2k ohms 1/16W	T
R25	ERJ3GEYJ202V	Chip 2k ohms 1/16W	T
R26	ERJ3GEYJ202V	Chip 2k ohms 1/16W	T
R27	ERJ3GEYJ302V	Chip 3k ohms 1/16W	T
R28	ERJ3GEYJ302V	Chip 3k ohms 1/16W	T
R29	ERJ3GEYJ302V	Chip 3k ohms 1/16W	T
R30	ERJ3GEYJ103V	Chip 10k ohms 1/16W	T
R31	ERJ3GEYJ303V	Chip 30k ohms 1/16W	T
R32	ERJ3GEYJ103V	Chip 10k ohms 1/16W	T
R33	ERJ3GEYJ103V	Chip 10k ohms 1/16W	T
R35	ERJ3GEYJ512V	Chip 5.1k ohms 1/4W	T
R99	ERJ3GEYJ103V	Chip 10k ohms 1/16W	T
R100	ERJ6GEY0R00V	Chip 0 ohms 1/10W	T
R101	ERJ6GEY0R00V	Chip 0 ohms 1/10W	T
R102	ERJ6GEY0R00V	Chip 0 ohms 1/10W	T
R103	ERJ6GEY0R00V	Chip 0 ohms 1/10W	T
R104	ERJ6GEY0R00V	Chip 0 ohms 1/10W	T
R105	ERJ6GEY0R00V	Chip 0 ohms 1/10W	T
R106	ERJ6GEY0R00V	Chip 0 ohms 1/10W	T
R107	ERJ6GEY0R00V	Chip 0 ohms 1/10W	T
R123	ERJ6GEY0R00V	Chip 0 ohms 1/10W	T
R124	ERJ6GEY0R00V	Chip 0 ohms 1/10W	T
R200	ERJ3ENF6801V	Chip 6.8k ohms 1/16W	T
R701	ERJ3GEYJ822V	Chip 8.2k ohms 1/16W	T
R702	ERJ3RBD202V	Chip 2k ohms 1/4W	T
R703	ERJ3GEYJ333V	Chip 33k ohms 1/16W	T
R704	ERJ3GEYJ153V	Chip 15k ohms 1/16W	T
R705	ERJ3ENF9101V	Chip 820 ohms 1/16W	T
R706	ERJ3ENF4700V	Chip 470 ohms 1/16W	T
R707	ERJ3GEYJ471V	Chip 470 ohms 1/16W	T
R708	ERJ3GEYJ271V	Chip 270 ohms 1/16W	T
R709	ERJ3GEYJ271V	Chip 270 ohms 1/16W	T
R710	ERJ3GEYJ471V	Chip 470 ohms 1/16W	T
R711	ERJ3GEYJ273V	Chip 27k ohms 1/16W	T
R712	ERJ3GEYJ333V	Chip 33k ohms 1/16W	T
R713	ERJ3GEYJ123V	Chip 12k ohms 1/16W	T
R714	ERJ3RBD392V	Chip 3.9k ohms 1/4W	T
R715	ERJ3RBD202V	Chip 2k ohms 1/4W	T
R716	ERJ3RBD222V	Chip 2.2k ohms 1/4W	T
R721	ERJ3GEYJ683V	Chip 68k ohms 1/16W	T
R722	ERJ12YJ0R33H	Chip 0.33 ohms 1/2W	T
R723	ERJ3GEYJ100V	Chip 10 ohms 1/16W	T
R724	ERJ12YJ0R47H	Chip 0.47 ohms 1/2W	T
R725	ERJ3GEYJ683V	Chip 68k ohms 1/16W	T
R731	ERJ3GEYJ103V	Chip 10k ohms 1/16W	T
R732	ERJ3GEYJ223V	Chip 220 ohms 1/16W	T
R750	ERJ3GEYJ101V	Chip 100 ohms 1/16W	T
R751	ERJ3GEYJ101V	Chip 100 ohms 1/16W	T
R752	ERJ3GEYJ101V	Chip 100 ohms 1/16W	T
R753	ERJ3GEYJ101V	Chip 100 ohms 1/16W	T
R754	ERJ3GEYJ101V	Chip 100 ohms 1/16W	T
R755	ERJ3GEYJ101V	Chip 100 ohms 1/16W	T

Ref. No.	Part No.	Part Name & Description	Remarks
R756	ERJ3GEYJ101V	Chip 100 ohms 1/16W	T
R757	ERJ3GEYJ101V	Chip 100 ohms 1/16W	T
T731	ETJ11K108AM	Tranfer	T
MONITOR BLOCK [E-4C903-1]			
M1	YER14MNR301J	Chip 300 ohms 1/16W	T
M2	YER14MNR301J	Chip 300 ohms 1/16W	T
M3	YER14MNR301J	Chip 300 ohms 1/16W	T
R1	ERJ6GEYJ750V	Chip 75 ohms 1/10W	T
R3	ERJ3GEYJ471V	Chip 470 ohms 1/16W	T
R4	ERJ3GEYJ391V	Chip 390 ohms 1/16W	T
R5	ERJ3GEYJ224V	Chip 220k ohms 1/16W	T
R6	ERJ3ENF1002V	Chip 10k ohms 1/16W	T
R7	ERJ3GEYJ332V	Chip 3.3k ohms 1/16W	T
R8	ERJ3GEYJ105V	Chip 1M ohms 1/16W	T
R9	ERJ3GEYJ304V	Chip 300k ohms 1/16W	T
R10	ERJ3GEYJ752V	Chip 7.5k ohms 1/16W	T
R21	ERJ3ENF1002V	Chip 10k ohms 1/16W	T
R22	ERJ3ENF1002V	Chip 10k ohms 1/16W	T
R27	ERJ3GEYJ103V	Chip 10k ohms 1/16W	T
R28	ERJ3ENF1002V	Chip 10k ohms 1/16W	T
R29	ERJ3GEYJ103V	Chip 10k ohms 1/16W	T
R45	ERJ3GEYJ301V	Chip 300 ohms 1/16W	T
R46	ERJ3GEYJ301V	Chip 300 ohms 1/16W	T
R47	ERJ3GEYJ301V	Chip 300 ohms 1/16W	T
R48	ERJ3GEYJ301V	Chip 300 ohms 1/16W	T
R51	ERJ3GEYJ106V	Chip 10M ohms 1/16W	T
R52	ERJ3GEYJ5R1V	Chip 5.1 ohms 1/4W	T
R53	ERJ3GEYJ102V	Chip 1k ohms 1/16W	T
R54	ERJ3GEYJ470V	Chip 47 ohms 1/16W	T
R55	ERJ3GEYJ102V	Chip 1k ohms 1/16W	T
R56	ERJ3GEYJ102V	Chip 1k ohms 1/16W	T
R57	ERJ3GEYJ100V	Chip 10 ohms 1/16W	T
R58	ERJ3GEYJ100V	Chip 10 ohms 1/16W	T
R59	ERJ3GEYJ512V	Chip 5.1k ohms 1/4W	T
R60	ERJ3GEYJ105V	Chip 1M ohms 1/16W	T
R61	ERJ3GEYJ683V	Chip 68k ohms 1/16W	T
R62	ERJ3GEYJ683V	Chip 68k ohms 1/16W	T
R63	ERJ3GEYJ473V	Chip 47k ohms 1/16W	T
R64	ERJ3GEYJ473V	Chip 47k ohms 1/16W	T
R65	ERJ3GEYJ512V	Chip 5.1k ohms 1/4W	T
R68	ERJ3ENF6202V	Chip 62k ohms 1/16W	T
R70	ERJ3ENF2002V	Chip 20k ohms 1/16W	T
R71	ERJ3ENF1001V	Chip 1k ohms 1/16W	T
R72	ERJ3ENF2701V	Chip 1.2k ohms 1/16W	T
R76	ERJ3GEYJ122V	Chip 1.2k ohms 1/16W	T
R77	ERJ3GEYJ122V	Chip 1.2k ohms 1/16W	T
R78	ERJ3GEYJ122V	Chip 1.2k ohms 1/16W	T
R79	ERJ3GEYJ681V	Chip 680 ohms 1/16W	T
R80	ERJ3GEYJ681V	Chip 680 ohms 1/16W	T
R81	ERJ3GEYJ681V	Chip 680 ohms 1/16W	T
R82	ERJ3GEYJ202V	Chip 2k ohms 1/16W	T
R83	ERJ3GEYJ202V	Chip 2k ohms 1/16W	T
R84	ERJ3GEYJ202V	Chip 2k ohms 1/16W	T
R85	ERJ3GEYJ473V	Chip 47k ohms 1/16W	T
R86	ERJ3GEYJ474V	Chip 470k ohms 1/16W	T
R88	ERJ3GEYJ270V	Chip 27 ohms 1/16W	T
R92	ERJ3GEYJ101V	Chip 100 ohms 1/16W	T
R93	ERJ3GEYJ390V	Chip39 ohms 1/16W	T
R94	ERJ3GEYJ512V	Chip 5.1k ohms 1/4W	T
R95	ERJ3GEYJ393V	Chip 39k ohms 1/16W	T
R98	ERJ3GEYJ302V	Chip 3k ohms 1/16W	T
R100	ERJ3GEYJ101V	Chip 100 ohms 1/16W	T
R104	ERJ3GEYJ471V	Chip 470 ohms 1/16W	T
R105	ERJ3GEYJ471V	Chip 470 ohms 1/16W	T
R106	ERJ3GEYJ471V	Chip 470 ohms 1/16W	T
R107	ERJ3ENF5601V	Chip 5.6k ohms 1/16W	T
R108	ERJ6GEY0R00V	Chip 0 ohms 1/10W	T
R109	ERJ6GEY0R00V	Chip 0 ohms 1/10W	T
R120	ERJ6GEY0R00V	Chip 0 ohms 1/10W	T
R909	ERJ3GEYJ103V	Chip 10k ohms 1/16W	T
R910	ERJ3ENF2701V	Chip 1.2k ohms 1/16W	T

Ref. No.	Part No.	Part Name & Description	Remarks
R911	ERJ3RBD222V	Chip 2.2k ohms 1/4W	T
SW/INVERTER BLOCK [E-4C903-2]			
R30	ERJ3GEYJ221V	Chip 220 ohms 1/16W	T
R37	ERJ8GEYJ121V	Chip 120 ohms 1/8W	T
R38	ERJ8GEYJ121V	Chip 120 ohms 1/8W	T
R39	ERJ8GEYJ121V	Chip 120 ohms 1/8W	T
R67	ERJ3ENF1002V	Chip 10k ohms 1/16W	T
R75	ERJ3ENF1002V	Chip 10k ohms 1/16W	T
R74	ERJ3GEYJ101V	Chip 100 ohms 1/16W	T
R87	ERJ8GEYJ121V	Chip 120 ohms 1/8W	T
R88	ERJ3GEYJ270V	Chip 27 ohms 1/16W	T
R121	ERJ6GEY0R00V	Chip 0 ohms 1/10W	T
R151	ERJ8GEYJ121V	Chip 120 ohms 1/8W	T
R152	ERJ8GEYJ121V	Chip 120 ohms 1/8W	T
R153	ERJ8GEYJ121V	Chip 120 ohms 1/8W	T
R761	ERJ3GEYJ471V	Chip 470 ohms 1/16W	T
R762	ERJ3GEYJ152V	Chip 1.5k ohms 1/16W	T
R763	ERJ3GEYJ152V	Chip 1.5k ohms 1/16W	T
5.Connectors			
MAIN BLOCK [E-4C902]			
CN1	YEAE54104402	Connector	T
CON1	YEAE4CCON013	Connector	T
PROG1	YEAE4CCON047	Connector	T
MONITOR BLOCK [E-4C903-1]			
CN2	YEAE54104402	Connector	T
CN3	YEAE54104402	Connector	T
SW/INVERTER BLOCK [E-4C903-2]			
CN4	YEAE54104402	Connector	T
CN5	YEAE5243530	Connector	T
CN751	YEAE4CCON019	Connector	T
6. Electric Parts			
SWITCHES			
SW0	YEAS210300	Switch	T
SW1	YEASPAE010	Switch	T
SW2	YEASPAE010	Switch	T
SW3	YEASPAE010	Switch	T
SW4	YEASPAE010	Switch	T
SW5	YEASPAE010	Switch	T
SW6	YEASPAE010	Switch	T
SW7	YEASPAE010	Switch	T
SW8	YEASPAE010	Switch	T
CRYSTAL			
X1	YEXL4C419TT	Crystal OSC	T
X2	H0J357400043	Crystal	T
	ZZ443400009	Crystal	T
COILS			
L2	YELTH4N560KF	Coil	T
L3	FBK1608HM102	Coil	T
L4	FBK1608HM102	Coil	T
L5	FBK1608HM102	Coil	T
F701	VLP0321A601T	BDEB	T
L702	YELQ104R330NC	Coil	T
L731	YELT03N470JT	Coil	T
L732	YELT03N100JT	Coil	T
L733	YELT03N100JT	Coil	T
L734	YELT03N101JT	Coil	T
DR1	YETQ012G126	Choke Coil	T
L1	YELT03N270JT	Coil	T
L6	YELT03N101JT	Coil	T

Ref. No.	Part No.	Part Name & Description	Remarks
L7	YELT03N2R2JT	Coil	T
F1	FBK1608HM102	Coil	T
L751	YELQ10S560M	Coil	T
T751	YETQ024C058V	Choke Coil	T
7. Accessories			
PRINTING			
	YFM284C415ZA	Operating Instructions	T
INSTALLATION PARTS			
	BISKIT6880HC	Screw Kit	T
	ZZBISVM6880HC	Screw Kit	T
	YFG044C002ZA	Rear Support Strap	T
	YAJ024C099ZA	Power Connector	T
8. Mechanical Parts			
MISCELLANEOUS			
F1	EE0007	Fuse, 3A	T
1	YFC024C634ZA	Rear Panel	T(4-B)
2	YJT034C027ZA	Screw (M2x8)	T(4-C)
3	RHD006TZA	Screw	T(4-C)
4	YFX214C352ZA	FPC Cover	T(4-C)
5	WYREK035FF	Wire	T(4-B)
6	EDTCA32QKF	LCD Panel For Monitor	T(4-B)
7	YEAEFPC022	FPC (40P U TYPE 80mm)	T(4-B)
8	YFE134C470ZA	Button (PRINTING)	T(4-A)
9	YFE134C468ZA	Sensor Covere	T(3-B)
10	YFX214C803ZC	Escape Case	T(3-C)
11	YFC024C637ZA	Front Panel	T(4-A)
12	YFX994C104ZA	Free Stop (L)	T(3-B)
13	YFX994C105ZA	Free Stop ®	T(3-B)
14	YFX024C083ZA	Tray Cover	T(3-B)
15	YJT034C031ZA	Screw (M2x5)	T(3-B)
16	YEJS064C001	Screw(M3x3)	T(3-B)
17	YFX994C064YA	Earth (L)	T(3-B)
18	YFX994C063YA	Earth (R)	T(3-B)
19	YFX214C301ZB	Lock Panel (L)	T(3-A)
20	YFX214C302ZB	Lock Panel (R)	T(2-B)
21	YFX994C067ZA	Collar	T(3-A)
22	YFS014C054ZA	Scar Prevent Sheet	T(2-C)
23	YFX994C093ZA	Vibrate Tape	T(2-C)
24	YFV014C062ZA	Chassis Sheet	T(3-C)
25	YFX054C063ZB	Spring Plate (L)	T(2-B)
26	YFX054C064ZB	Spring Plate (R)	T(2-C)
27	XSS5+8FXS	Screw	T(2-C)
28	XSB2+3FZ	Screw (M2x3)	T(3-A)
29	YFX214C299ZA	Lock Panel	T(3-A)
30	YFX214C300YA	John Trepan	T(2-A)
31	YFX014C068ZA	O Washer	T(2-A)
32	YFX054C054ZA	Mechanics Lock Spring	T(2-A)
33	YEAEFPC006	FPC (40P x 105mm)	T(2-A)
34	YFV014C061ZA	Insulator (TFT)	T(1-A)
36	YFC054C062ZA	Trim Plate	T(1-A)
37	YFJ014C123ZA	Badge Panel	T(2-B)
38	YFX994C106ZA	Panel Tape	T(2-B)
39	YFC024C635ZA	Escucheon	T(2-B)
40	YFV014C069ZA	Sheet	T(2-B)
41	XUC3FN	E Washer	T(2-C)
42	YFX994C066ZB	Lock Earth	T(2-C)
43	YFX054C044ZA	Lock Spring	T(2-C)
44	YFA034C049ZA	Upper Cover	T(2-C)
45	XTN3+6FFX	Tapping Screw 3 x 6mm	T(2-C)
46	YFX214C355ZA	Power Cord Bracket	T(2-C)
47	YJS064C001ZB	Screw	T(1-C)
48	YFA054C039ZA	Bottom Cover	T(1-C)
49	AAPB903A0-2	SW/Inverter Assy	T(4-B)/RTL
50	AAPB903A0-1	Monitor PCB Assy	T(2-A)/RTL
51	AAPB902A0	Main PCB Assy	T(2-C) /RTL

10 EXPLODED VIEW (Unit)

■ Numbers in ○ are indicated REF.No.in the REPLACEMENT PARTS LIST

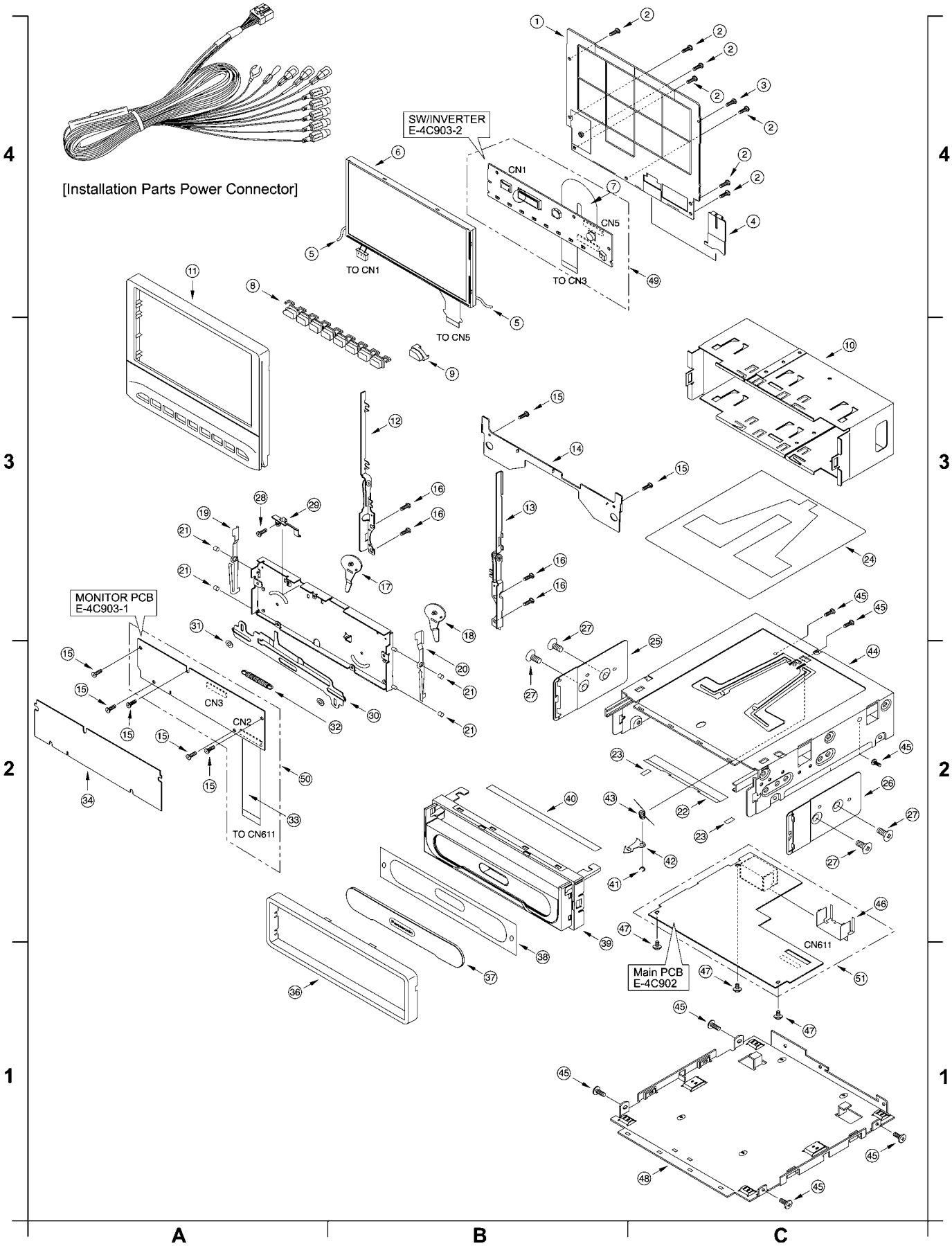

11 WIRING DIAGRAM

11.1. Main Block-1

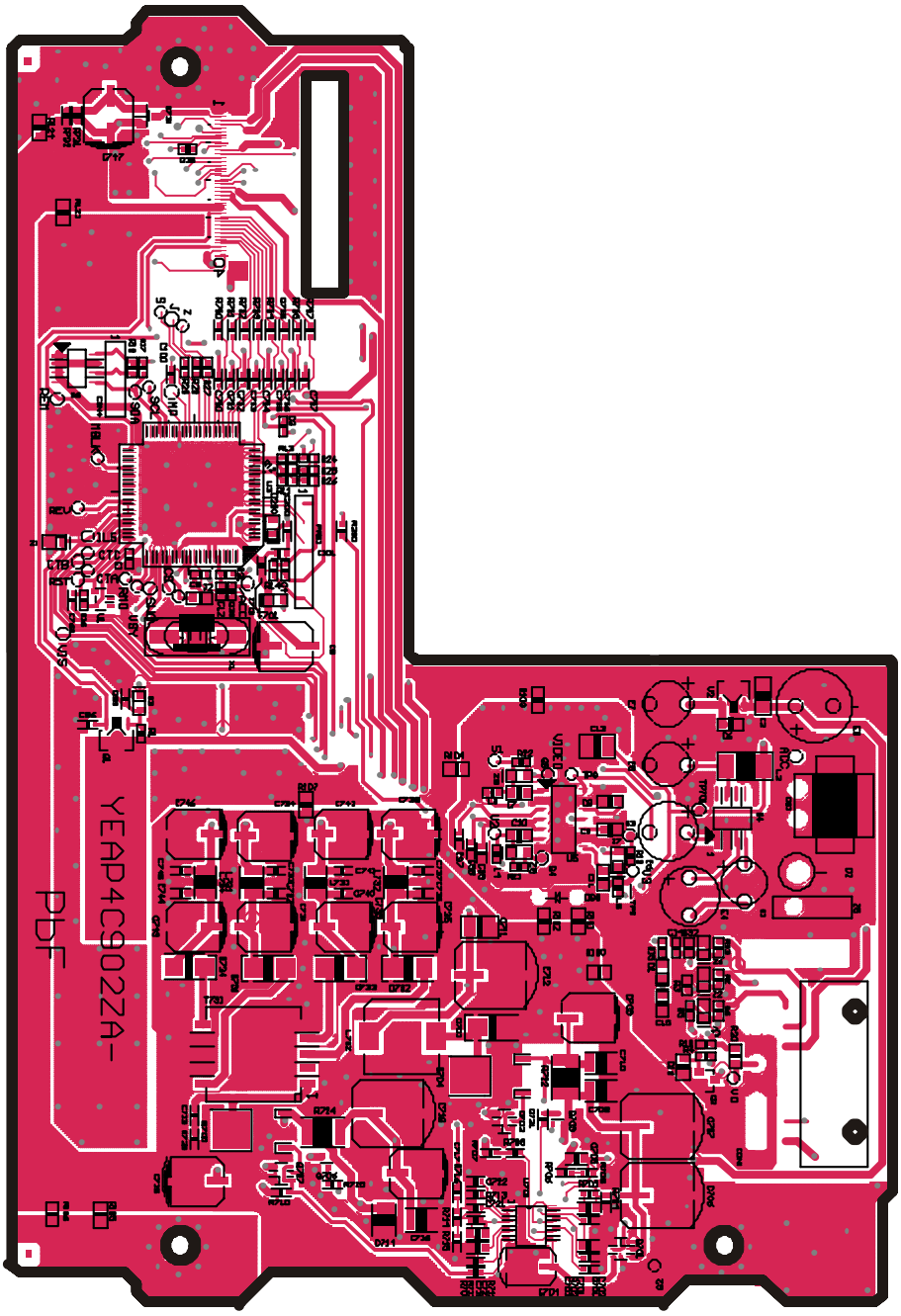

[E-4C902][TOP VIEW]

CY-VM6880H MAIN PCB

11.2. Main Block-2

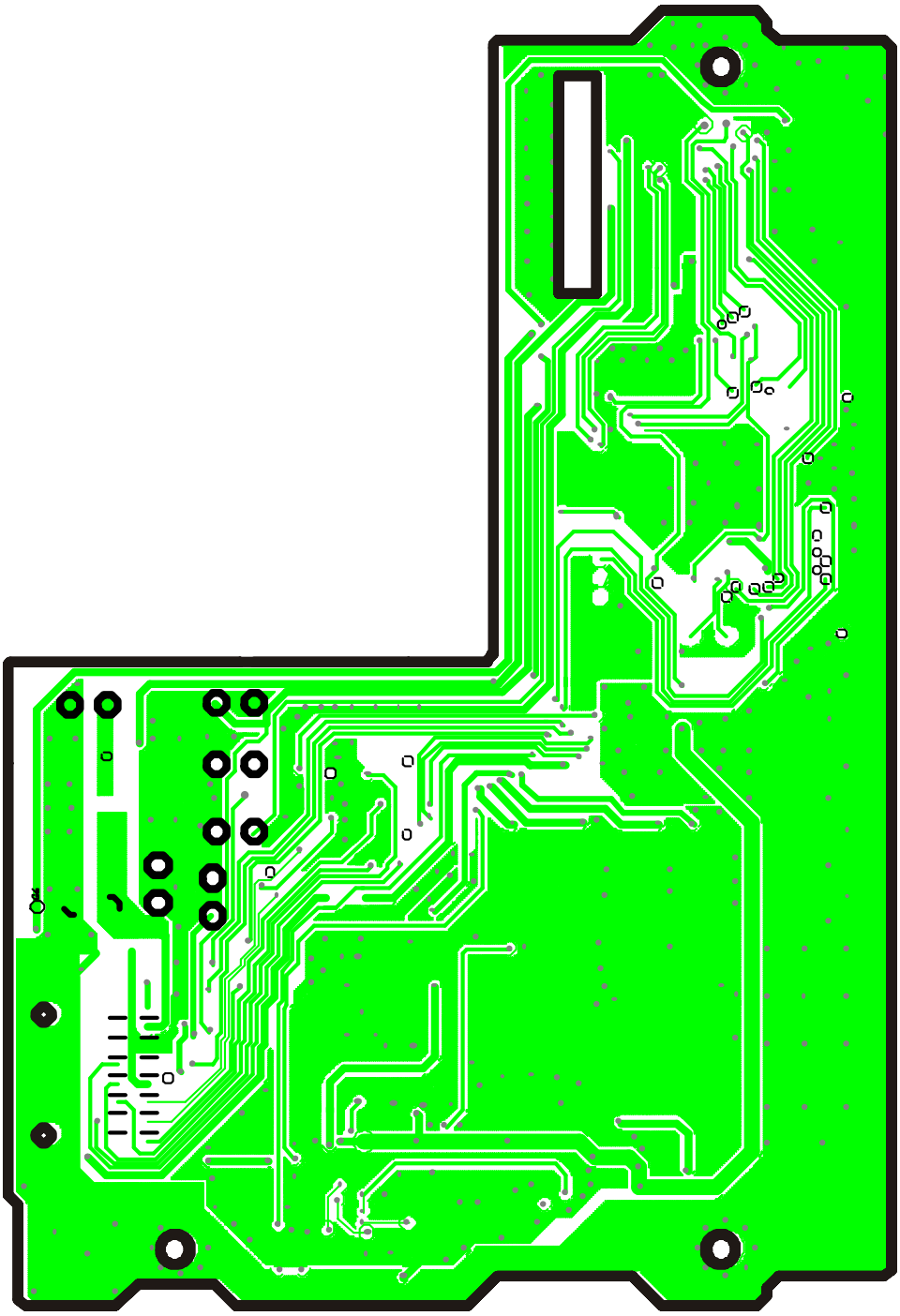

[E-4C902][BOTTOM VIEW]

CY-VM6880H MAIN PCB

11.3. Display Block-1

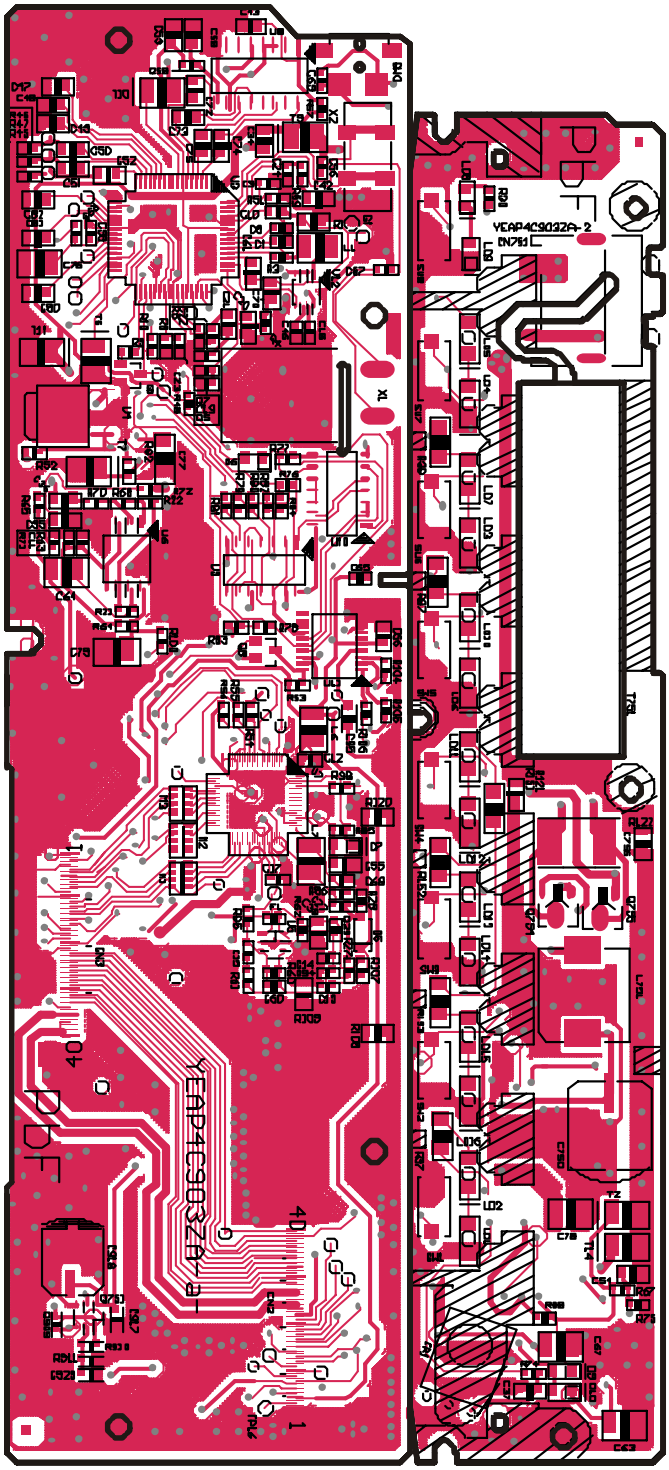

[E-4C903][TOP VIEW]

CY-VM6880H MONITOR/SW PCB

11.4. Display Block-2

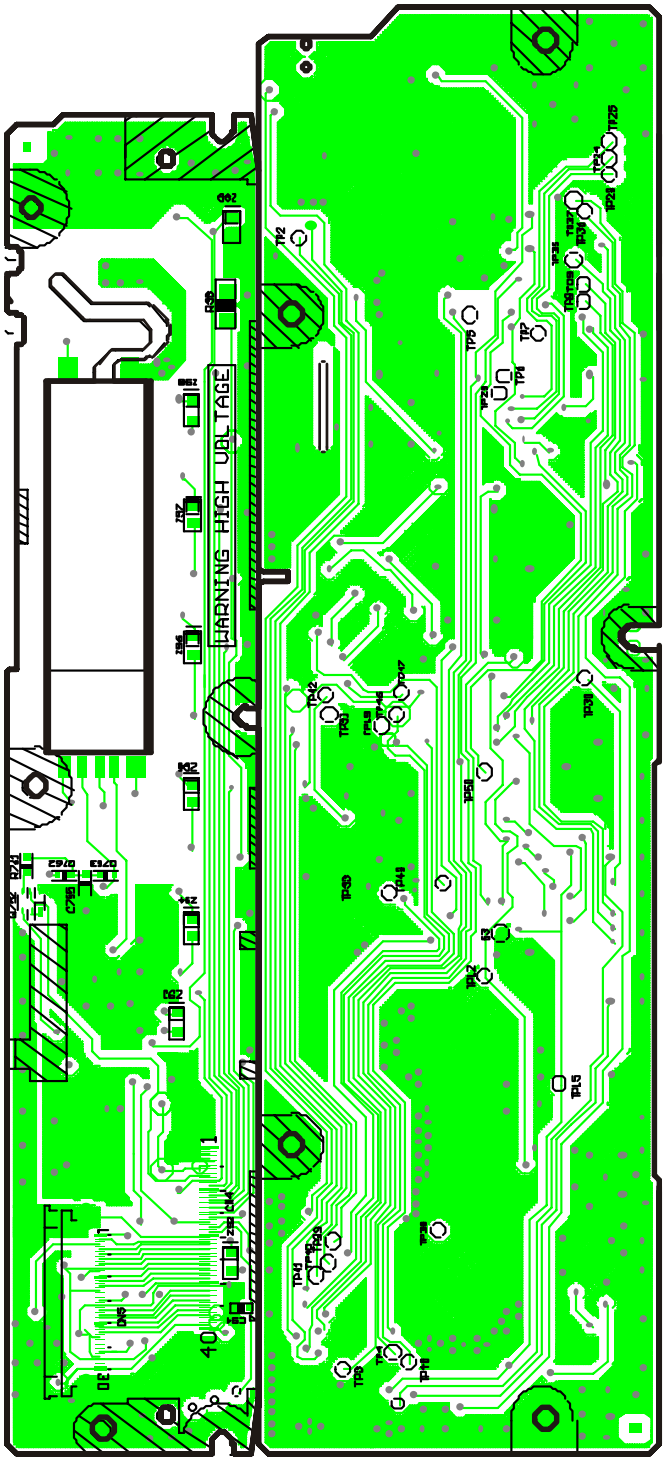

[E-4C903][BUTTOM VIEW]

CY-VM6880HMONITOR/SW PCB

12 SCHEMATIC DIAGRAM (Main Block)

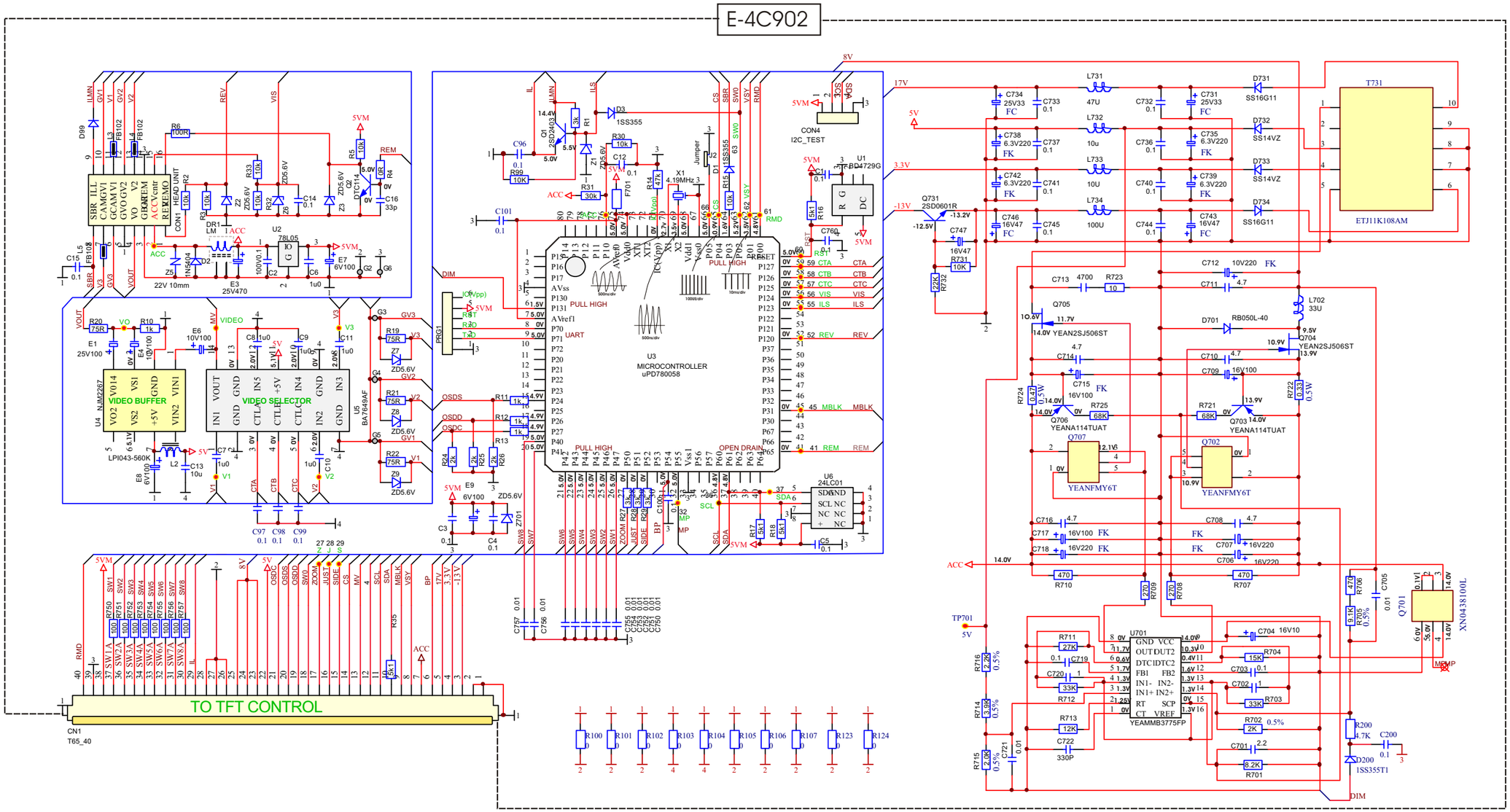

CY-VM6880H MAIN BLOCK

13 SCHEMATIC DIAGRAM (Display Block)

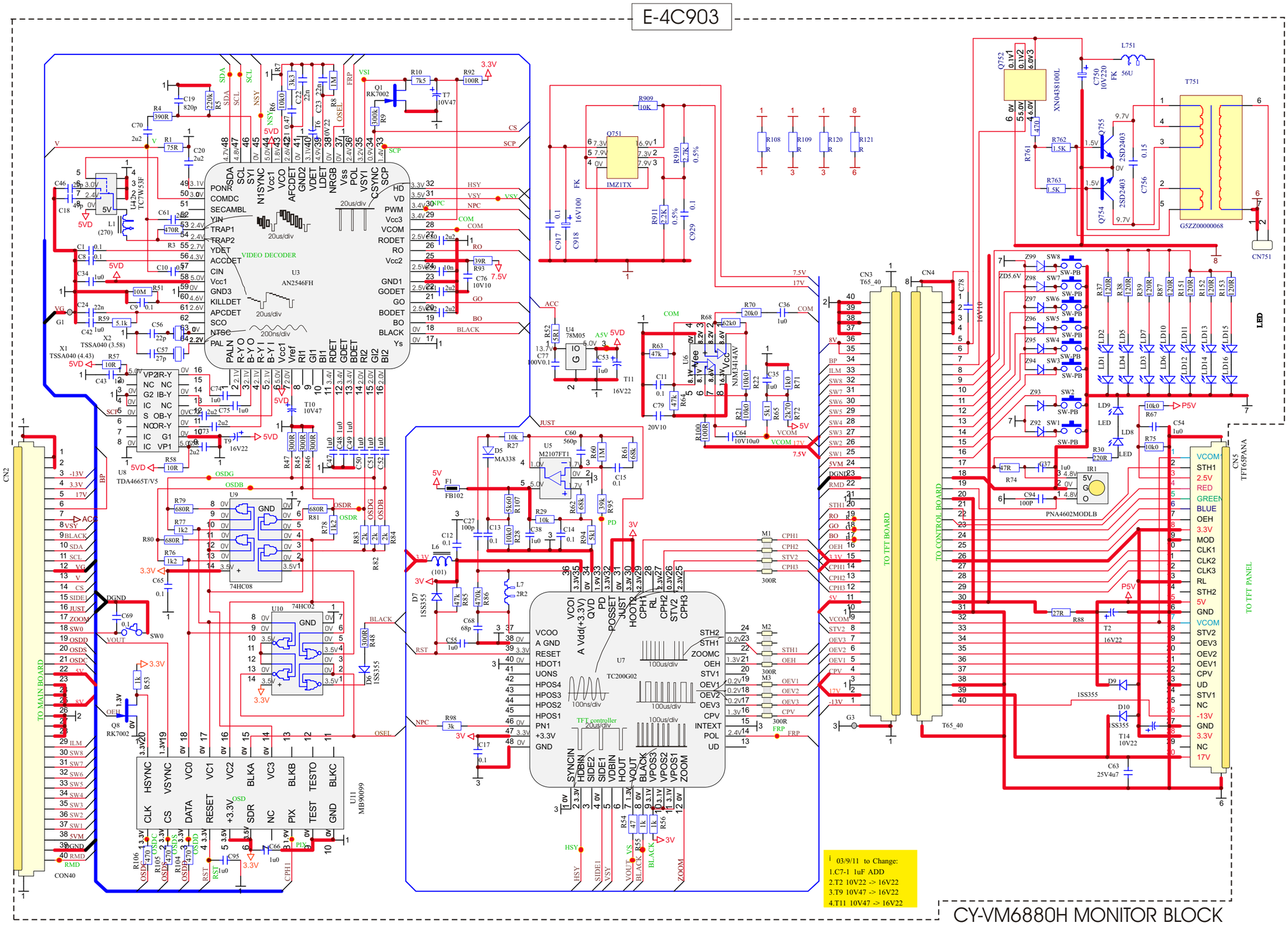

14 SCHEMATIC DIAGRAM for printing with letter size

14.1. Main Block (Left Side)

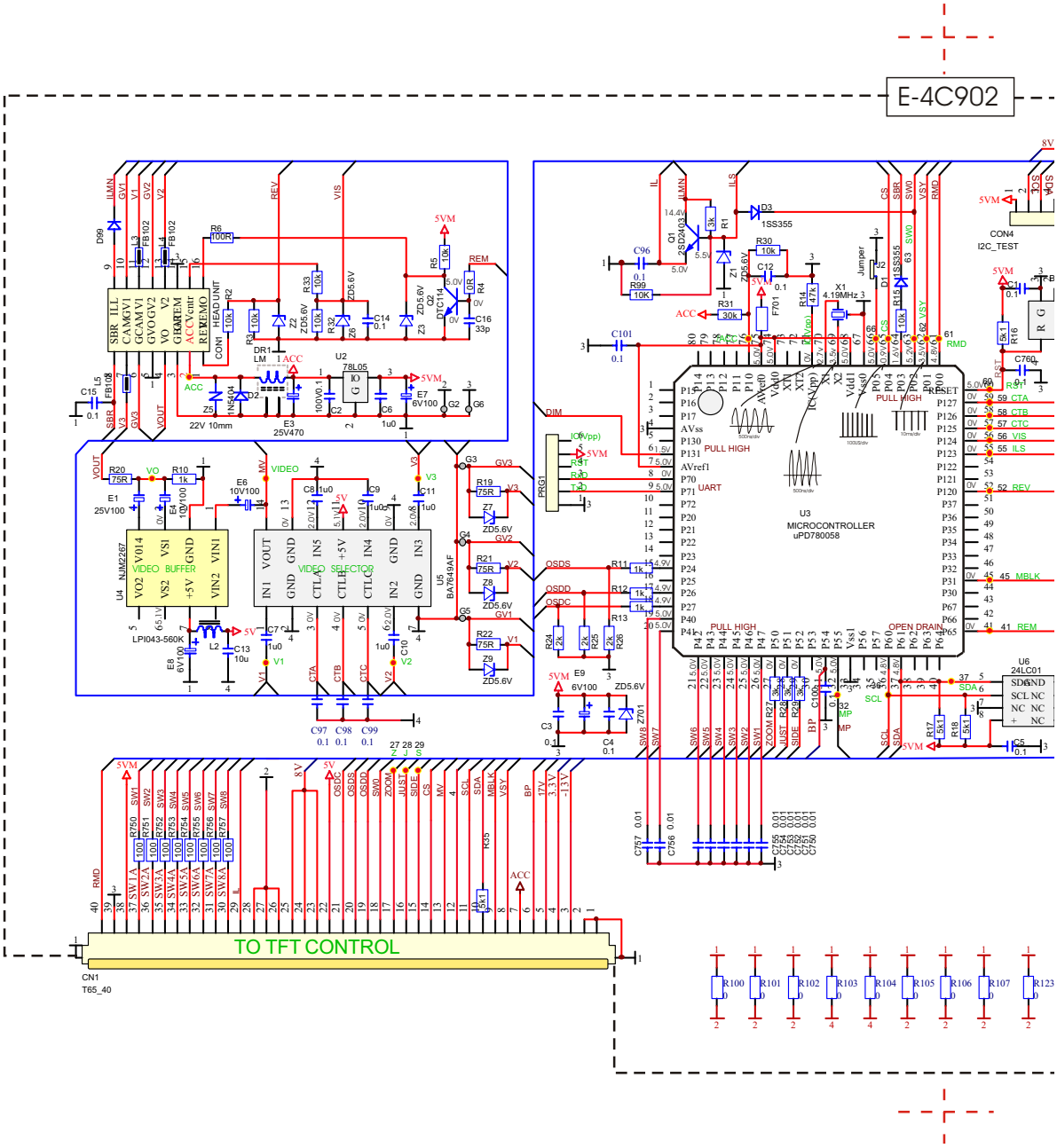

14.2. Main Block (Right Side)

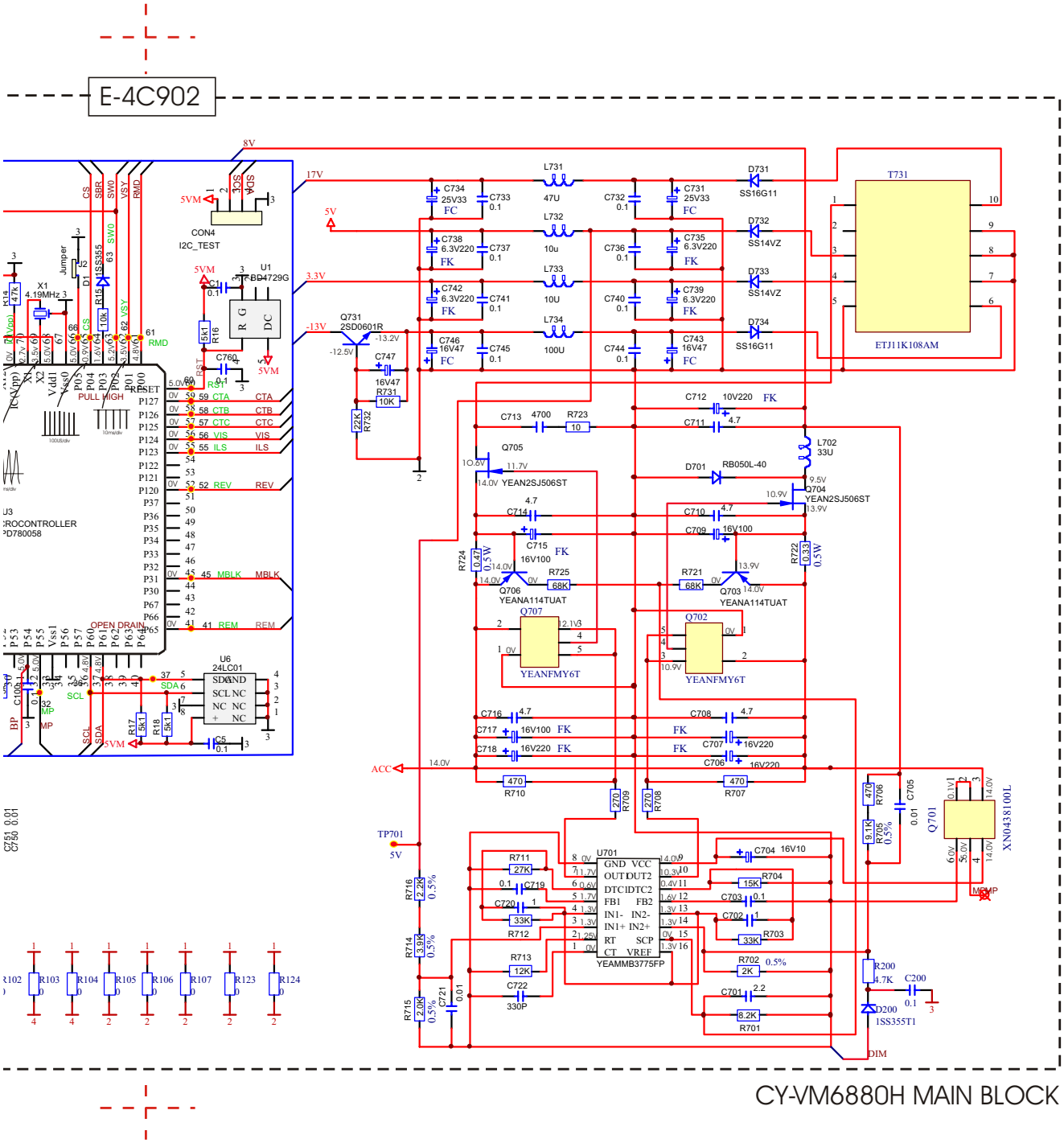

14.3. Monitor Block (Left Side)

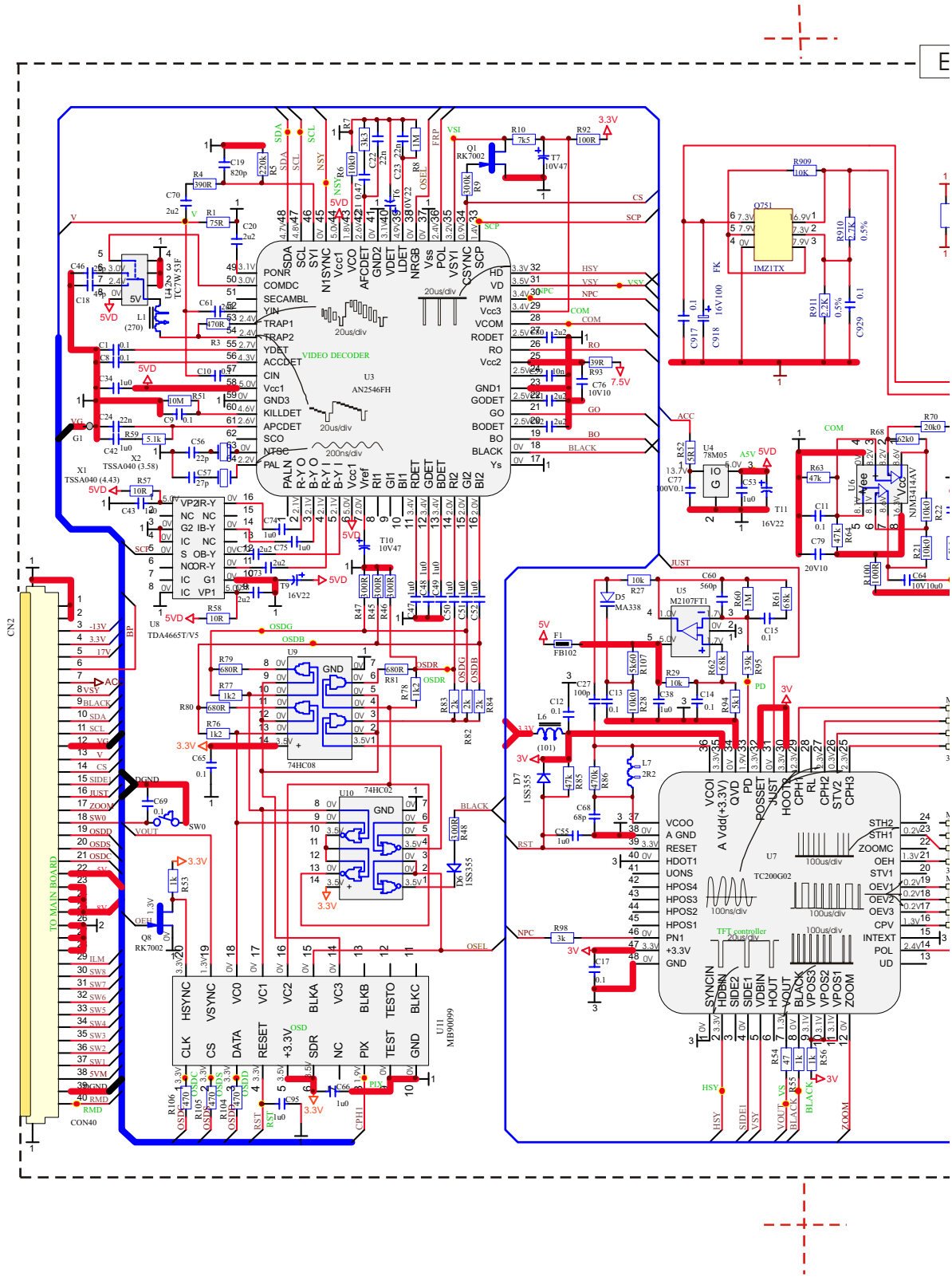

14.4. Monitor Block (Right Side)

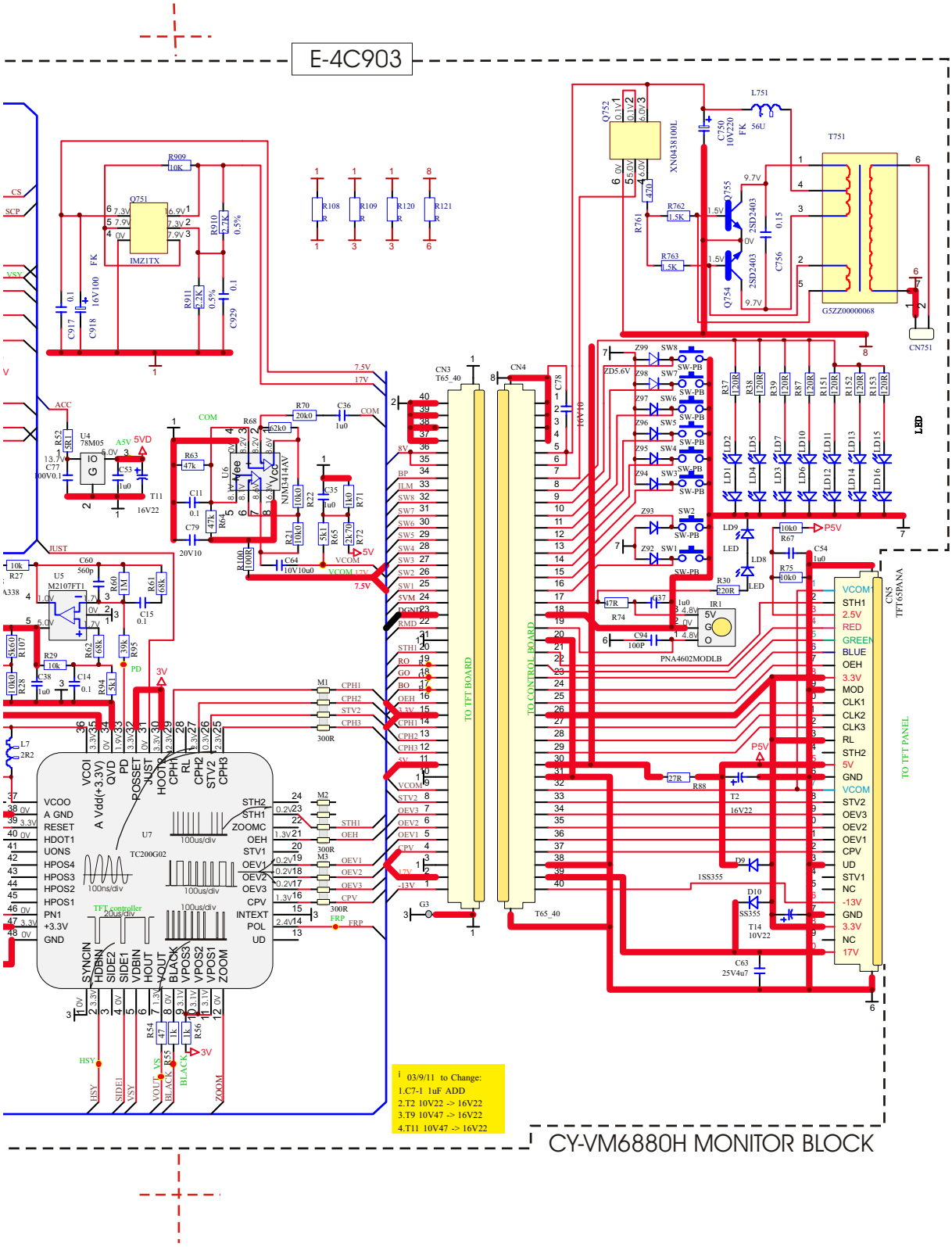

Printed in Taiwan
2004.01

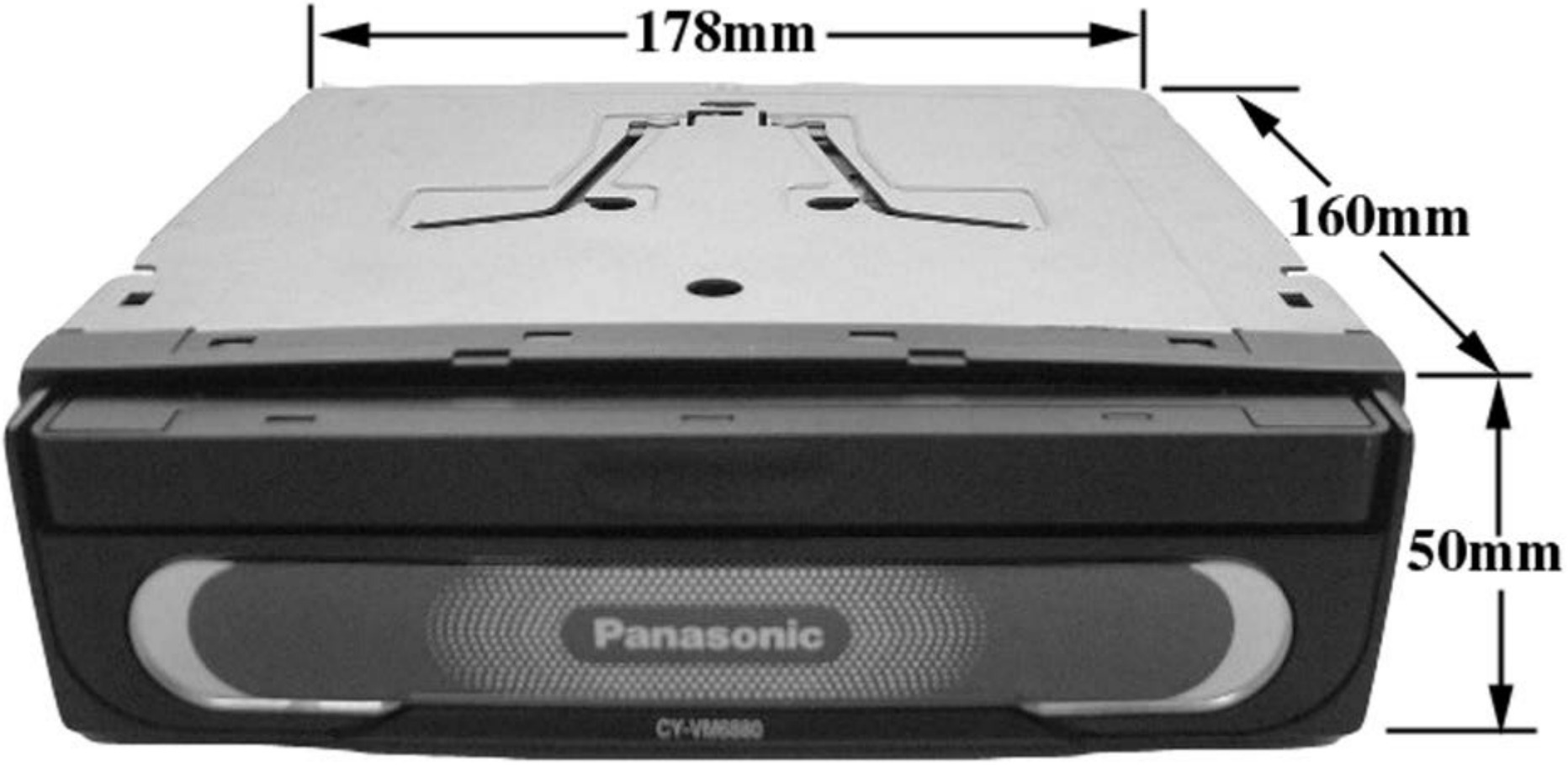
178mm
160mm
50mm
Panasonic
CY-VM6880

■ Numbers in ○ are indicated REF.No.in the REPLACEMENT PARTS LIST

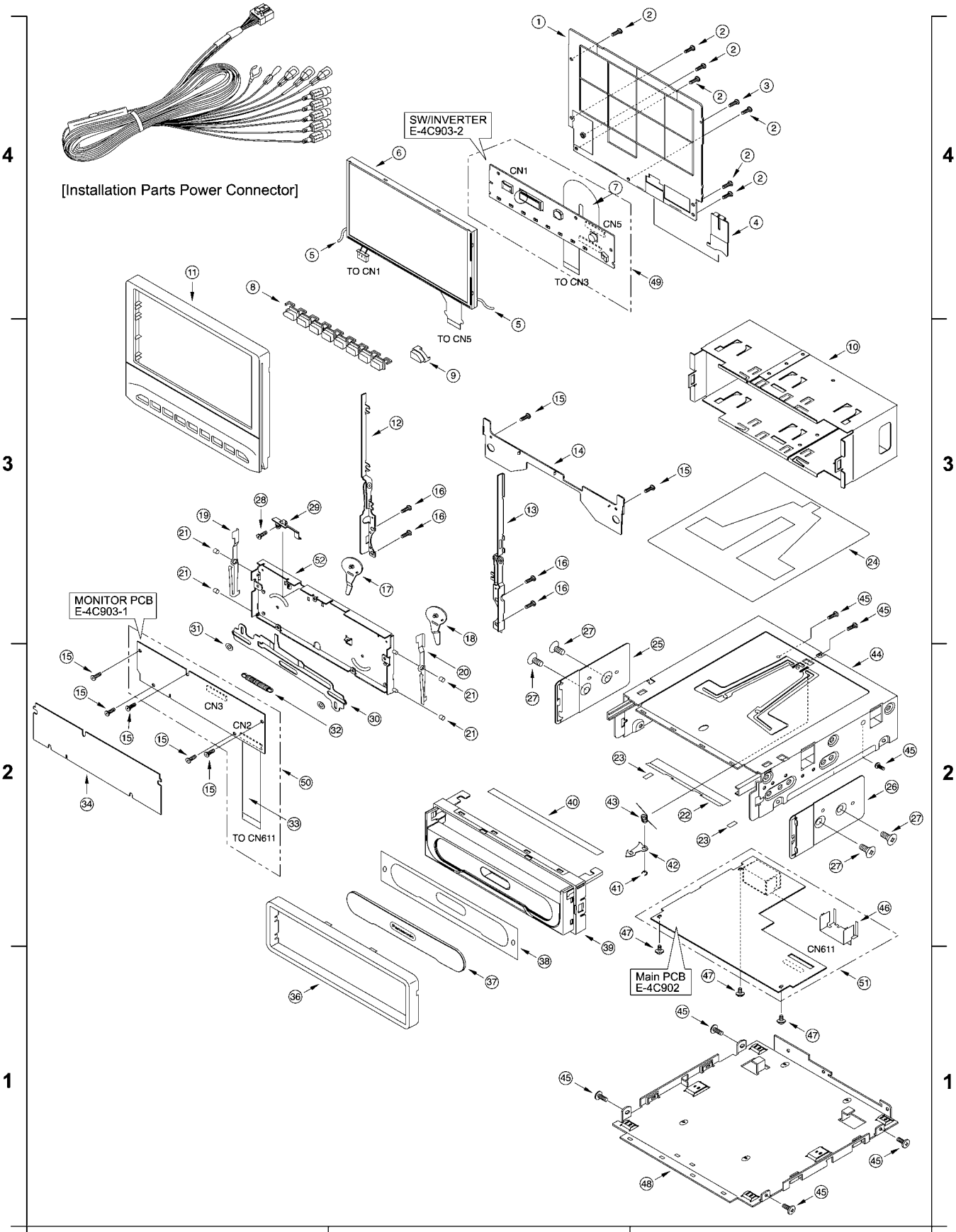

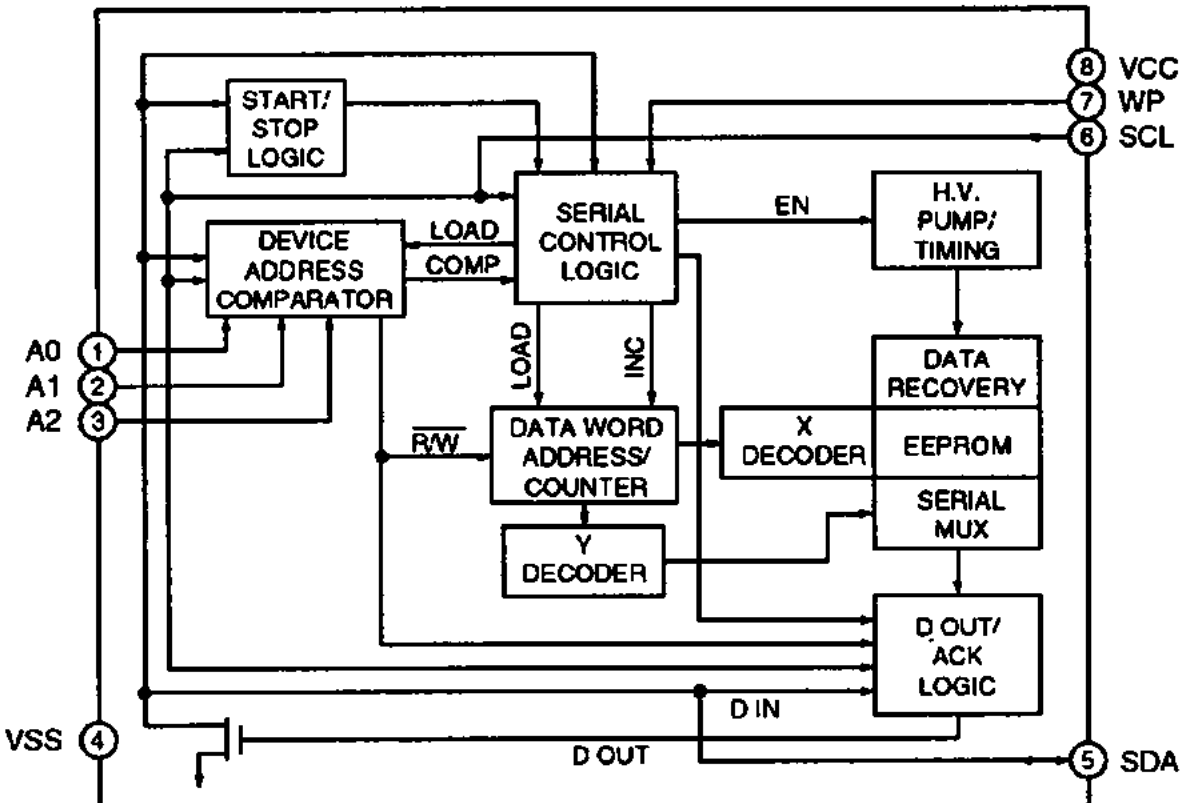

U6 YEAMS24C02A

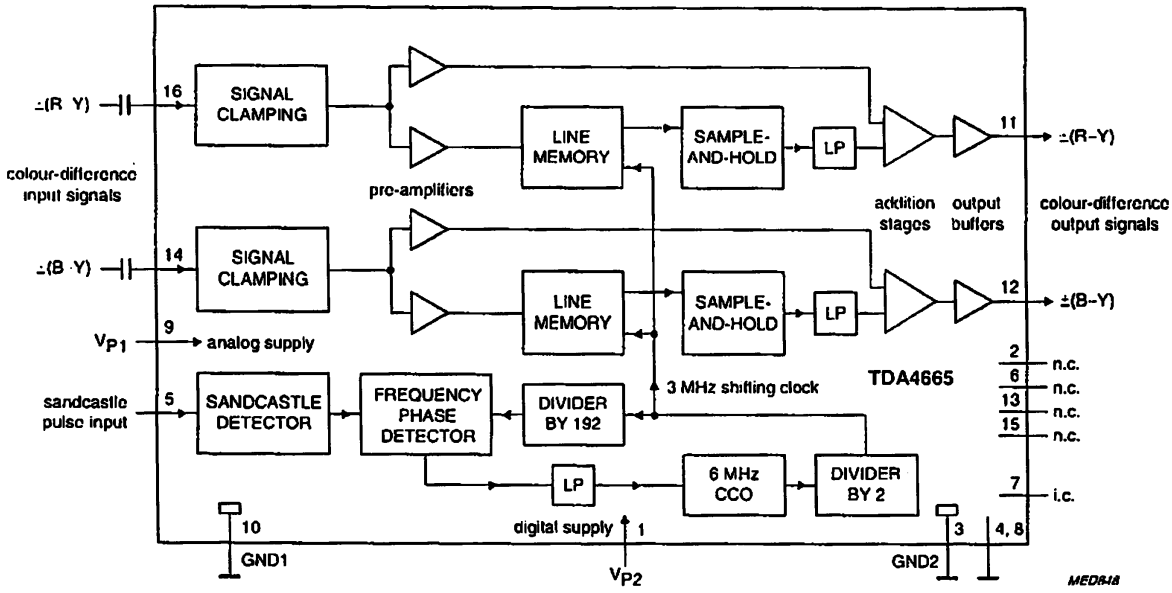

U8 C0ZBZ000432

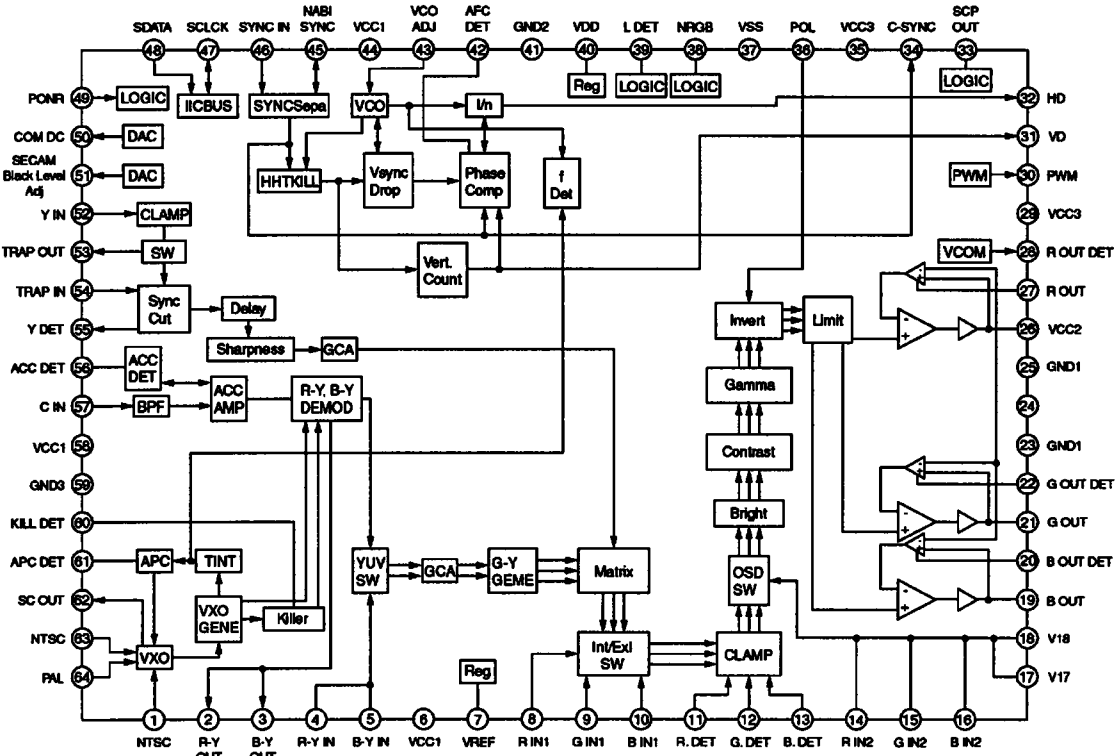

U3 **AN2546FH**-A

U6 YEAMNJM3414AM

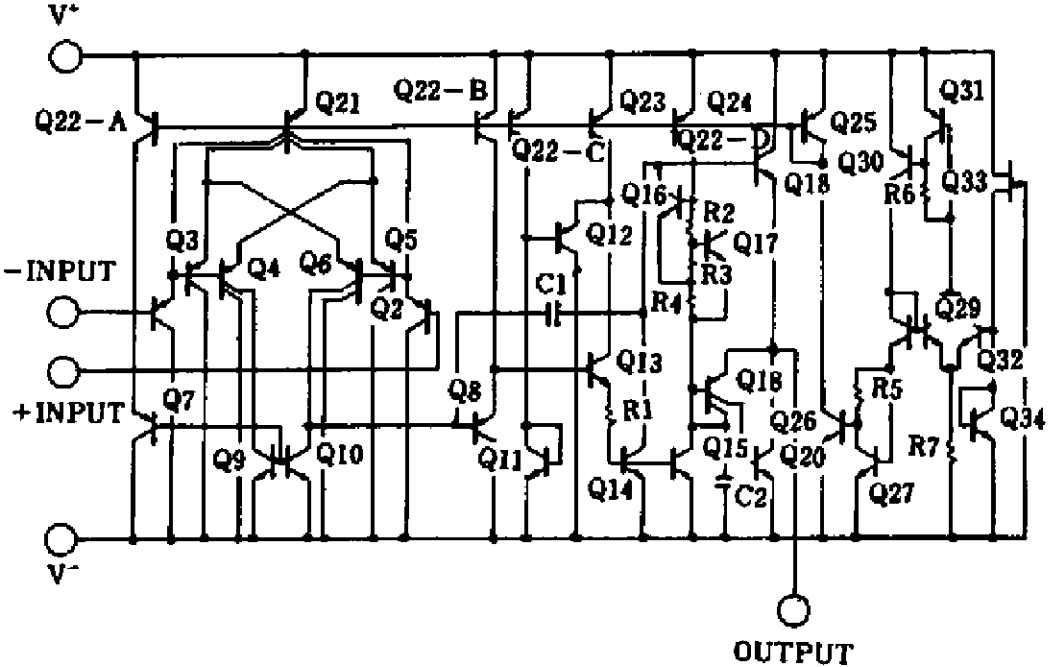

U1 YEAMBD4729G

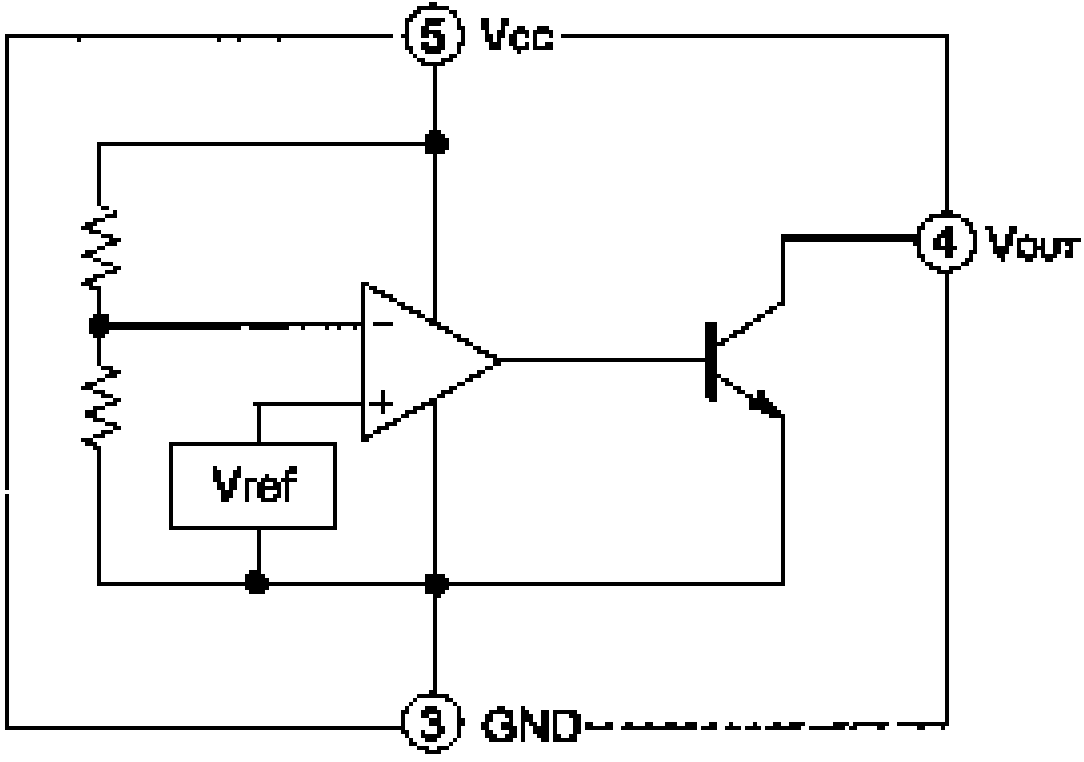

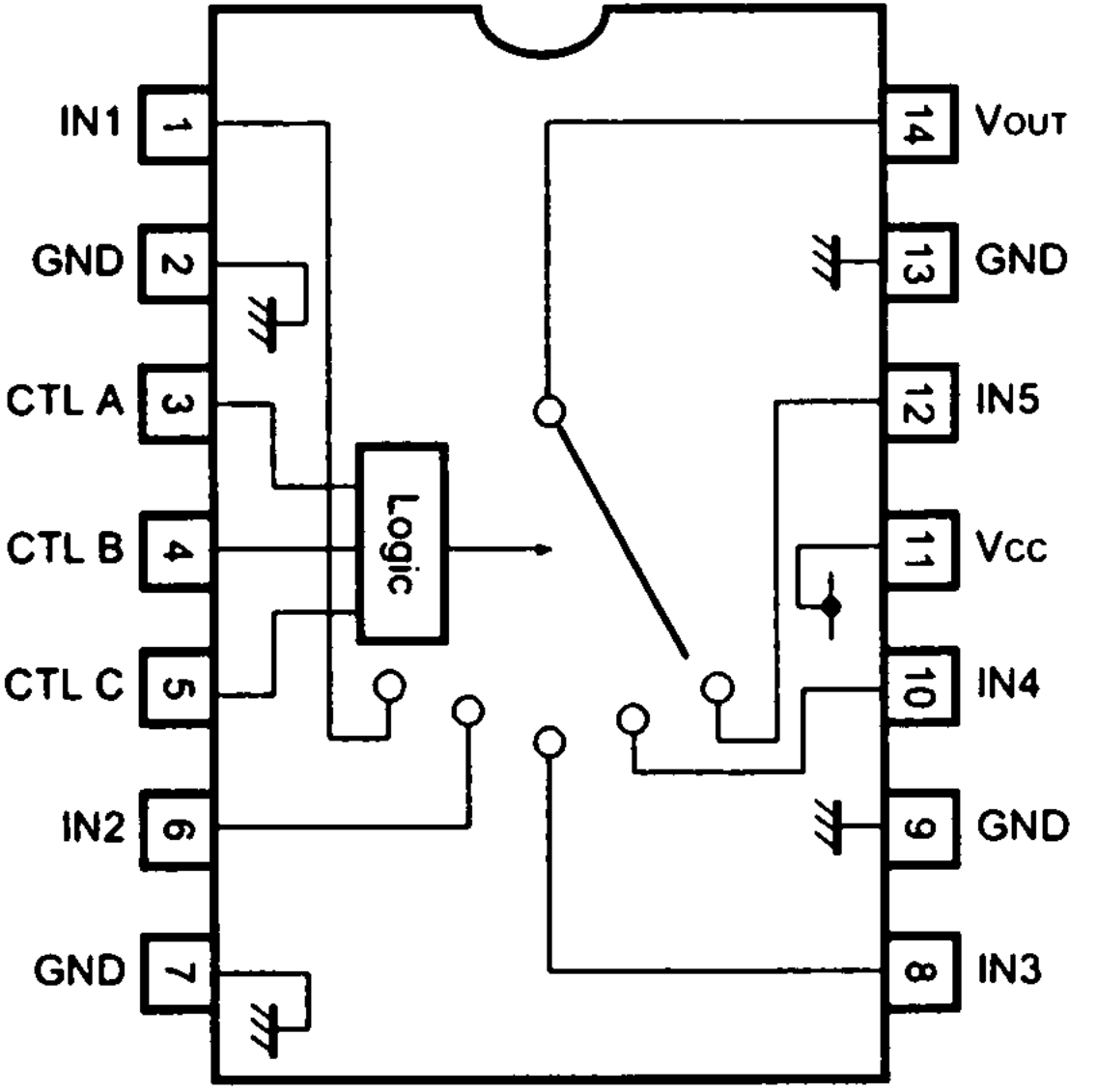

U5 YEAMBA7649AF

Note:

1. Be sure to make your orders of replacement parts according to this list.
2. Important safty notice: Component , indentified by ⚠ mark have special characteristics important for safety. when replacing any of these components, use only manufacturer's specified parts.
3. Location keys in the remarks column indicates the general location of the parts shown in the exploded drawing. as in a load map.
4. The marking (RTL) indicates that Retention Time is **limited** for this item. After the discontinuation of assembly in production, the item will continue to be availability is dependent on the type of assembly, and in accordance with the laws governing part and product retention. Aft the end of this period, the assembly will no longer be available.
5. "T" marks in remarks colum are indicated supply parts of TAMACO.

- **Order intake period is basically six months after the first shipment**

Note:

1. Be sure to make your orders of replacement parts according to this list.
2. Important safty notice: Component , indentified by ⚠ mark have special characteristics important for safety. when replacing any of these components, use only manufacturer's specified parts.
3. Location keys in the remarks column indicates the general location of the parts shown in the exploded drawing. as in a load map.
4. "T" marks in remarks colum are indicated supply parts of TAMACO.

E-4C903

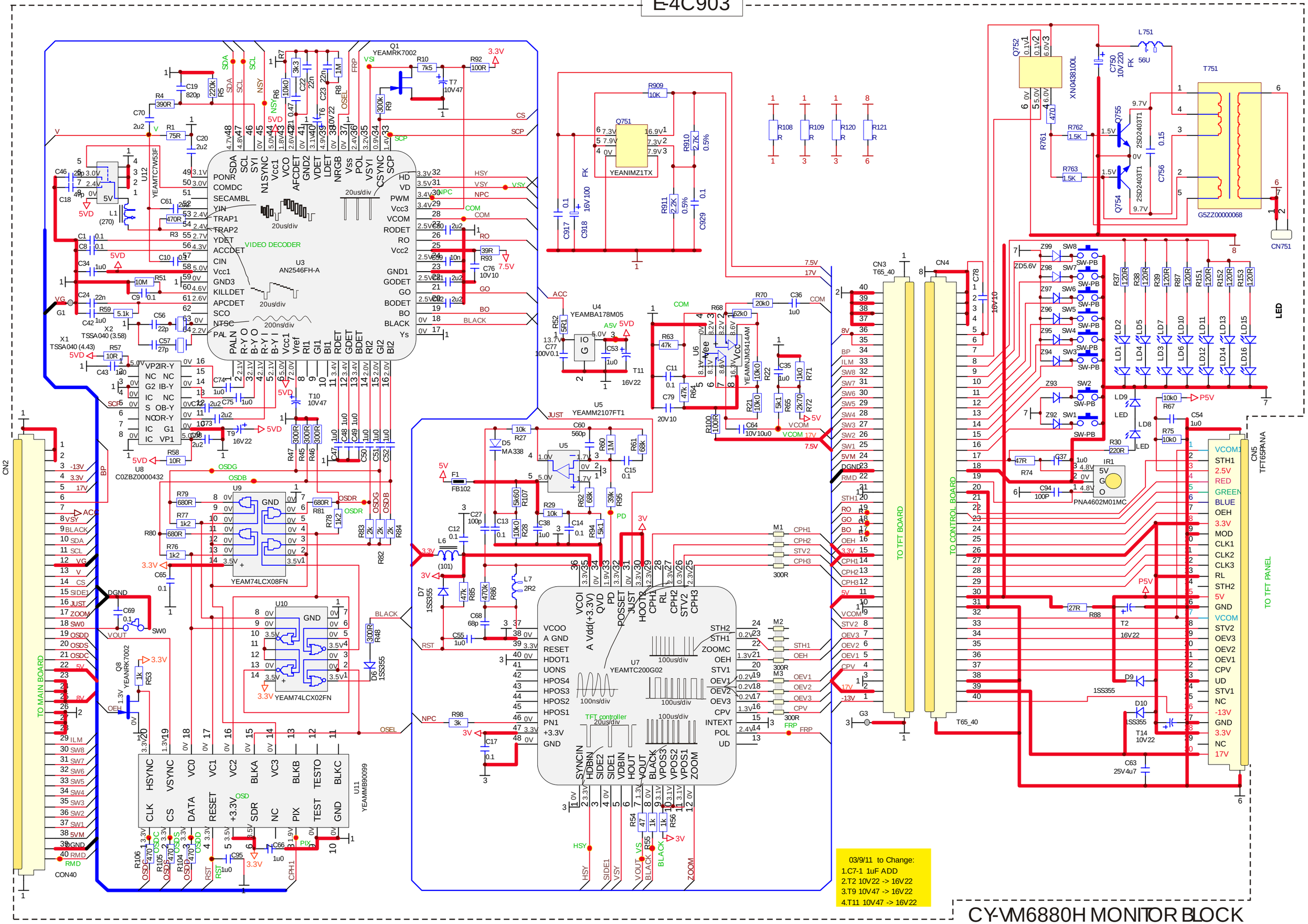

CY-VM6880H MONITOR BLOCK

13.2. Display Block

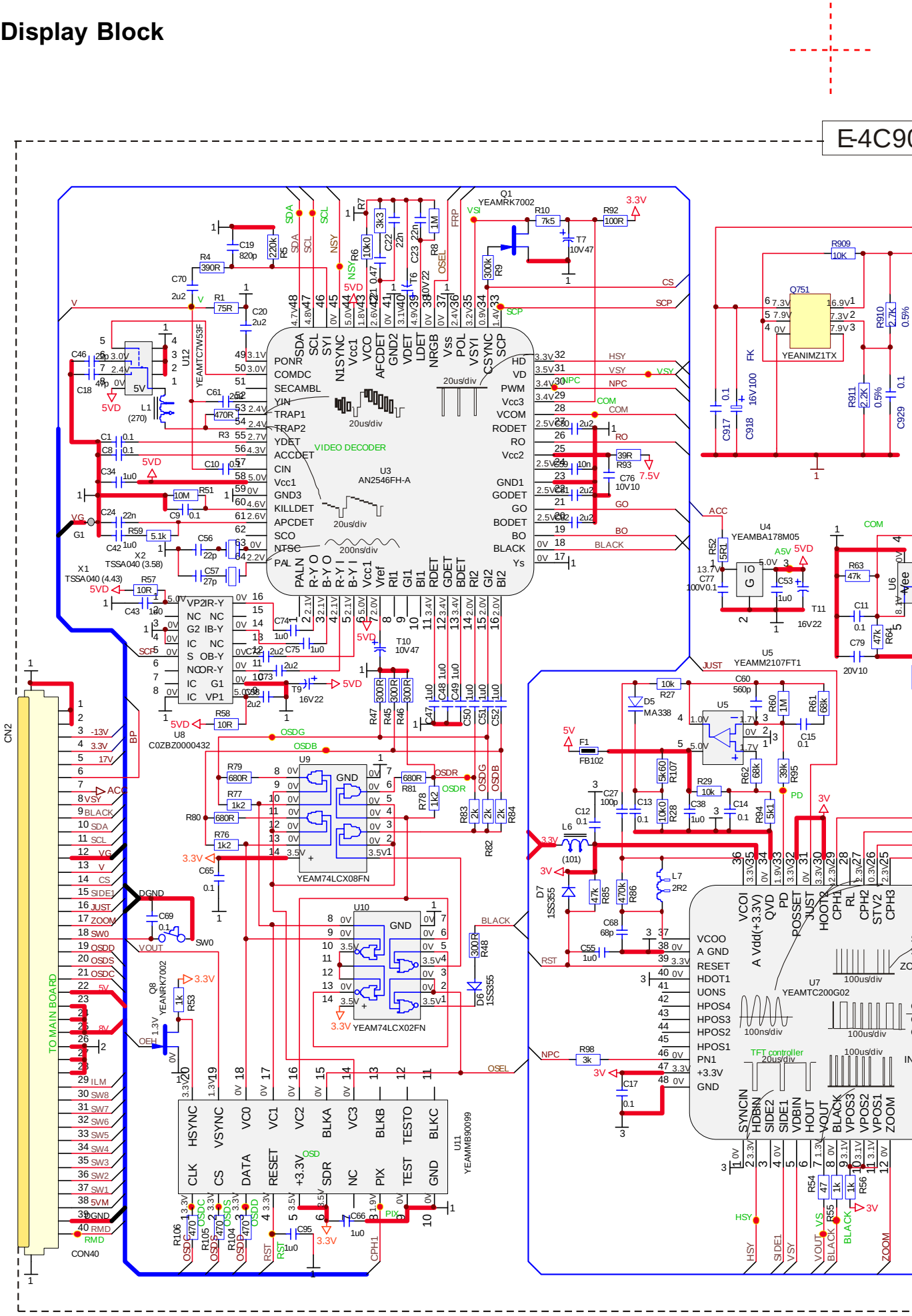

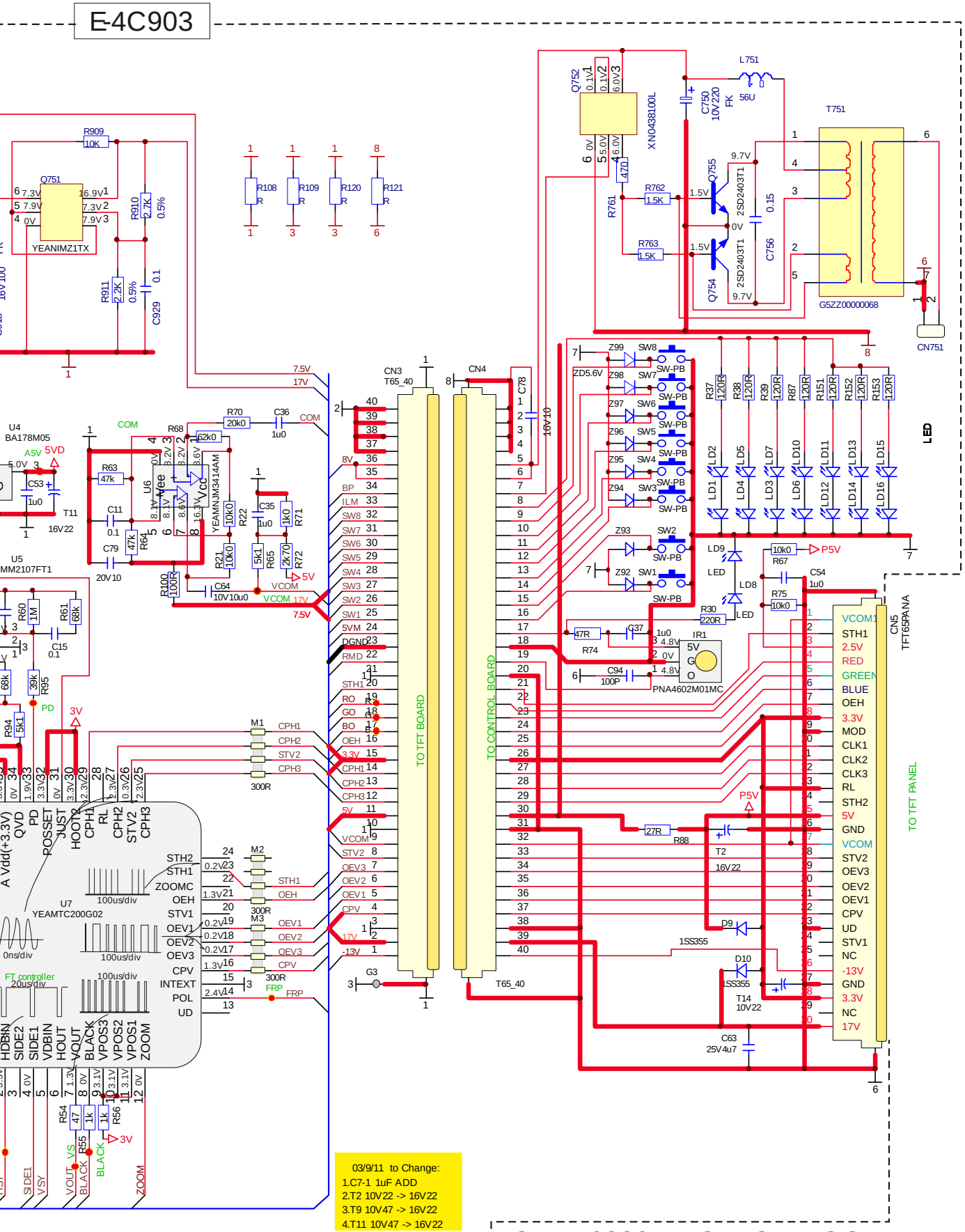
E-4C903
Q751
YEANIMZ1TX
R909 10K
R910 2.7K 0.5%
R911 2.2K 0.5%
C929 0.1
R108 R
R109 R
R120 R
R121 R
Q752
XN0438100L
L751
C750 10V220 FK
56U
T751
G5ZZ00000068
CN751
Q755
Q754
2SD2403T1
R762 1.5K
R763 1.5K
R761 470
C756 0.15
U4 BA178M05
U5 MM2107FT1
U6 YEAMNJM3414AM
U7 YEAMTC200G02
T11 16V22
C53 1u0
C79 20V10
C11 0.1
C15 0.1
R63 47k
R64 47k
R60 1M
R61 68k
R95 39k
R94 5k1
R70 20k0
C36 1u0
R68 62k0
R22 10k0
R21 10k0
R100 100R
C64 10V10u0
C35 1u0
R71 1k0
R65 5k1
R72 2k70
CN3 T65_40
CN4
C78 16V10
TO TFT BOARD
TO CONTROL BOARD
T65_40
G3
M1 300R
M2 300R
M3 300R
CPH1
CPH2
STV2
CPH3
STH1
OEH
OEV1
OEV2
OEV3
CPV
FRP
LED
R37 120R
R38 120R
R39 120R
R87 120R
R151 120R
R152 120R
R153 120R
LD1
LD2
LD4
LD5
LD3
LD7
LD6
LD10
LD11
LD12
LD13
LD14
LD15
LD16
LD9
LD8
R67 10k0
R75 10k0
C54 1u0
R30 220R
IR1
PNA4602M01MC
R74 47R
G37 1u0
C94 100P
R88 27R
T2 16V22
D9 1SS355
D10 1SS355
T14 10V22
C63 25V4u7
CN5 TFT65PANA
TO TFT PANEL
VCOM1
STH1
2.5V
RED
GREEN
BLUE
OEH
3.3V
MOD
CLK1
CLK2
CLK3
RL
STH2
5V
GND
VCOM
STV2
OEV3
OEV2
OEV1
CPV
UD
STV1
NC
-13V
GND
3.3V
NC
17V
03/9/11 to Change:
1.C7-1 1uF ADD
2.T2 10V22 -> 16V22
3.T9 10V47 -> 16V22
4.T11 10V47 -> 16V22
CY-VM6880H MONITOR BLOCK

13 SCHEMATIC DIAGRAM (Main Block)

13.1. Main Block

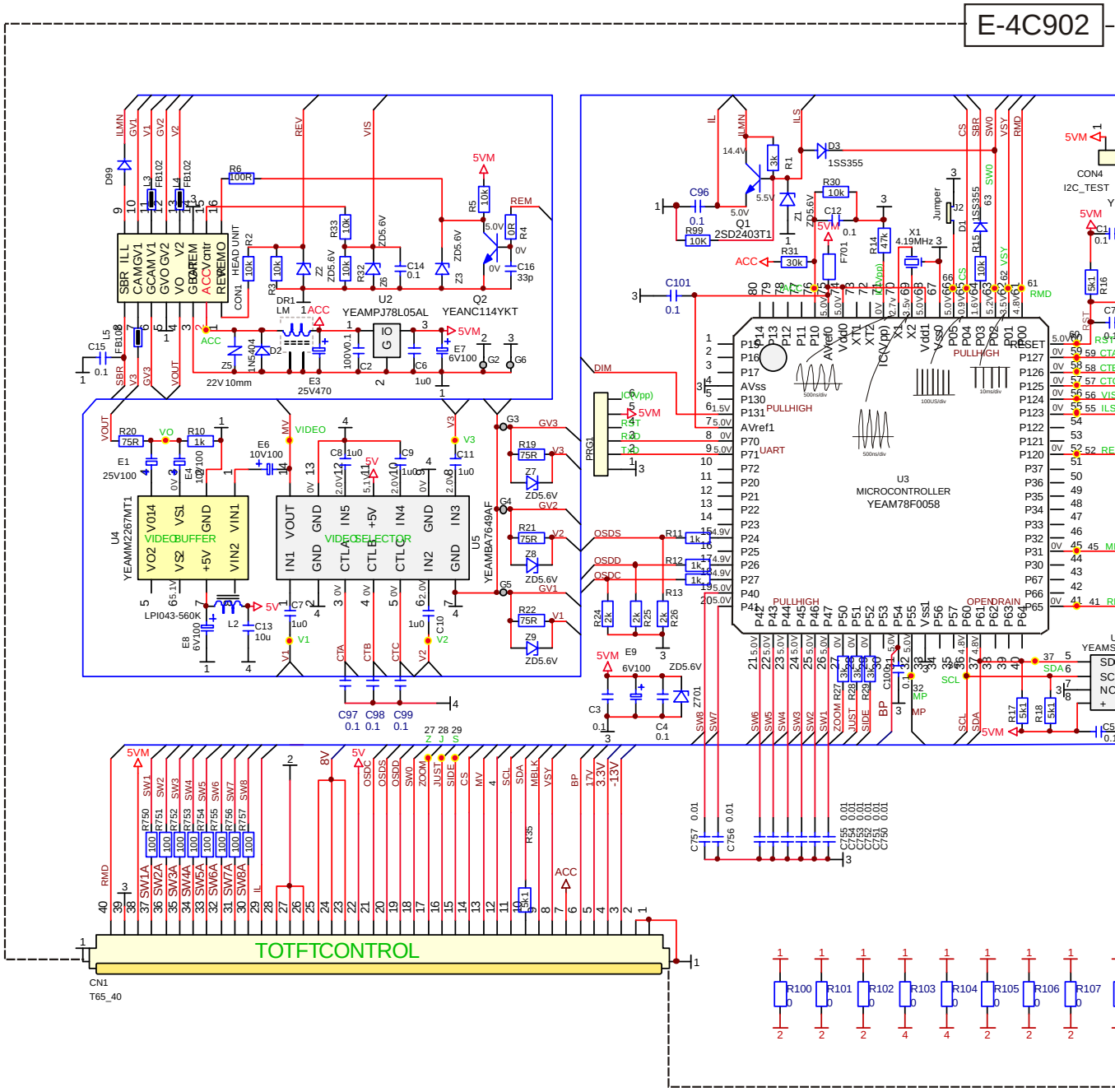

E-4C902

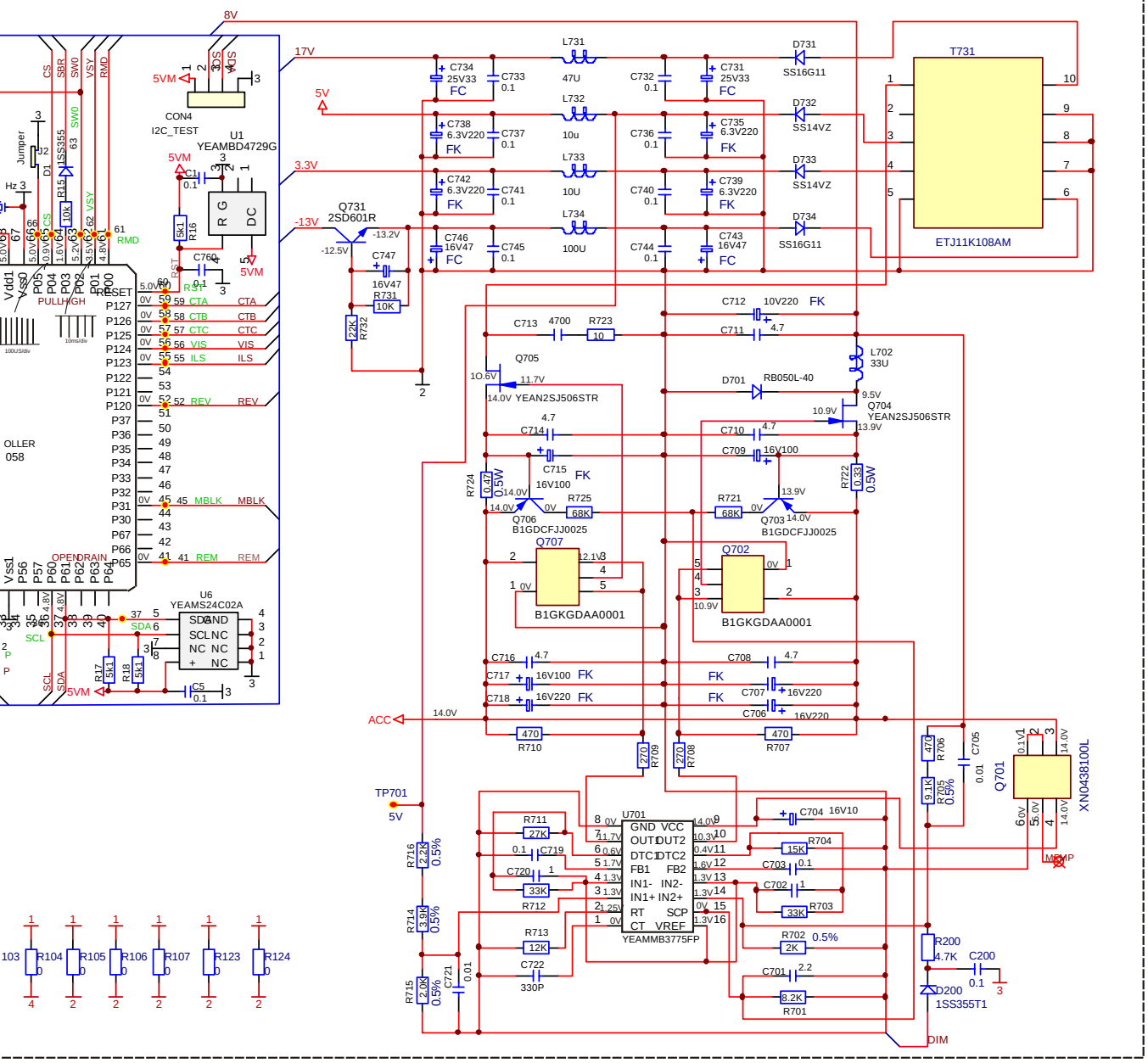

CY-VM6880HMAINBLOCK

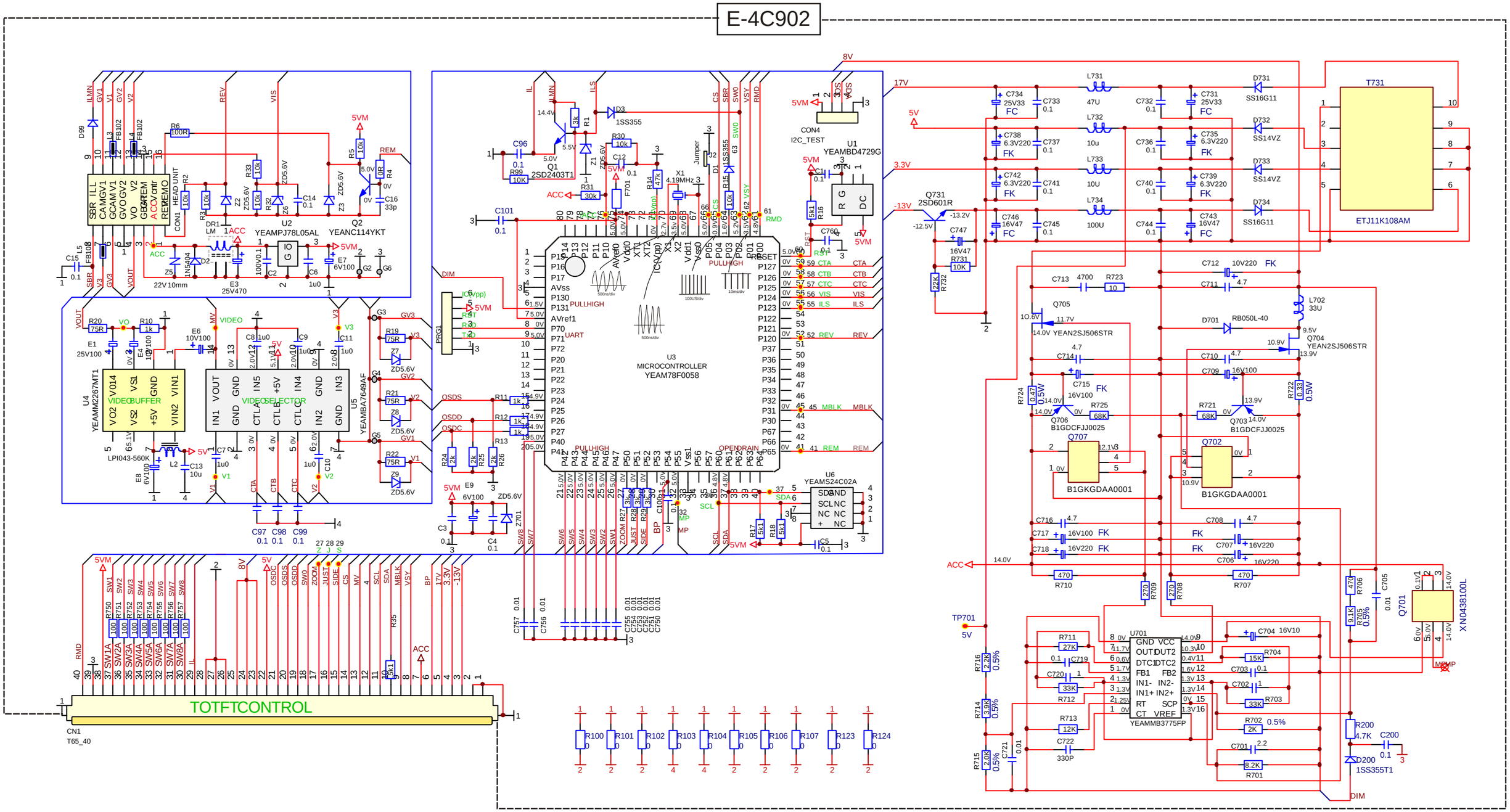
E-4C902
U2
YEAMPJ78L05AL
Q2
YEANC114YKT
U3
MICROCONTROLLER
YEAM78F0058
U1
YEAMBD4729G
CON4
I2C_TEST
U4
YEAMM2267MT1
VIDEO BUFFER
U5
YEAMBA7649AF
VIDEO SELECTOR
U6
YEAMS24C02A
Q731
2SD601R
T731
ETJ11K108AM
Q704
YEAN2SJ506STR
Q705
YEAN2SJ506STR
Q707
B1GKGDAA0001
Q702
B1GKGDAA0001
U701
YEAMMB3775FP
Q701
XN0438100L
TOTFTCONTROL
CN1
T65_40
CYVM6880HMAINBLOCK

Specifications *

General

Power Supply	: 12V DC (11V-16V) Test Voltage 14.4V, Negative ground
Maximum Power Output	: 50W x4 channels at 400Hz, Volume Control maximum
Power Output	: 20 W per channel into 4 ohms, 40 to 30,000Hz, at 3% THD
Tone Action	: Bass; ± 12 dB at 100Hz Treble; ± 12 dB at 10kHz
Current Consumption	: Less than 2.5 A (tape mode, 0.5W 4-Speaker)
Speaker Impedance	: 4 Ω (4-8Ω acceptable)
Pre-Amp Output Voltage	: 2.0V (CD Play mode; 1kHz 0dB)

AM Radio

Frequence Range	: 531 - 1602 kHz
Useable Sensitivity	: 28 dB/μV (25 μV/ S/N 20dB)

FM Stereo Radio

Frequency Range	: 87.5 - 108 MHz
Useable Sensitivity	: 12 dBf. (1.1μV/75 Ω, S/N 30 dB)
50 dB Quieting Sensitivity	: 17 dBf. (1.8 μV/75Ω)
Frequency Response	: 30 - 15,000Hz (± 3dB)
Alternate Channel Sensitivity	: 75dB
Stereo Separation	: 35 dB (1kHz)
Signal/Noise Ratio	: 70 dB (Mono)

Tape Player

Reproduction System	: 4- track, 2-program stereo
Tape Speed	: 1-7/8" /sec (4.76cm/sec)
FF/REW Time	: Less than 200 sec (C-60)
Frequency Responce	:35-14,000Hz(±3dB)
Wow and Fluter	: 0.12 % (WRMS)
Signal/Noise Ratio	: 52 dB

Dimentions **(W x H x D)	: 7" x 1-15/16" x 5-7/8" (178 x 50 x 150 mm)
Weight	: 3 lbs. 8 oz. (1.6 kg)

* Specifications and the design are subject to possible modification
** without notice due to improvements.
*** Dimentions and weight shown are approximate.
Above specifications comply with EIA standards.

Specifications *

General

[1 DIN]
Power Supply :12VDC (11V~16V)
Test Voltage 14.4V
Current Consumption :Less than 2.5A
Temperature :-10.0°C~+55.0°C

[Display]
LCD :6.5 inch display
Picture size : W 143mm
H 79mm
D 163mm
Pixel : 280800 Pixel
(Vertical 234 x Horizontal 1200)

Dimentions **(WxH*D): 6.7" x 2" x 6.3"
170mm x 50mm x 160mm
Weight : 2.4lbs
1.1kg

* Specifications and the design are subject to possible modification
** without notice due to improvements.
*** Dimentions and weight shown are approximate
Above specifications complay with EIA Standards

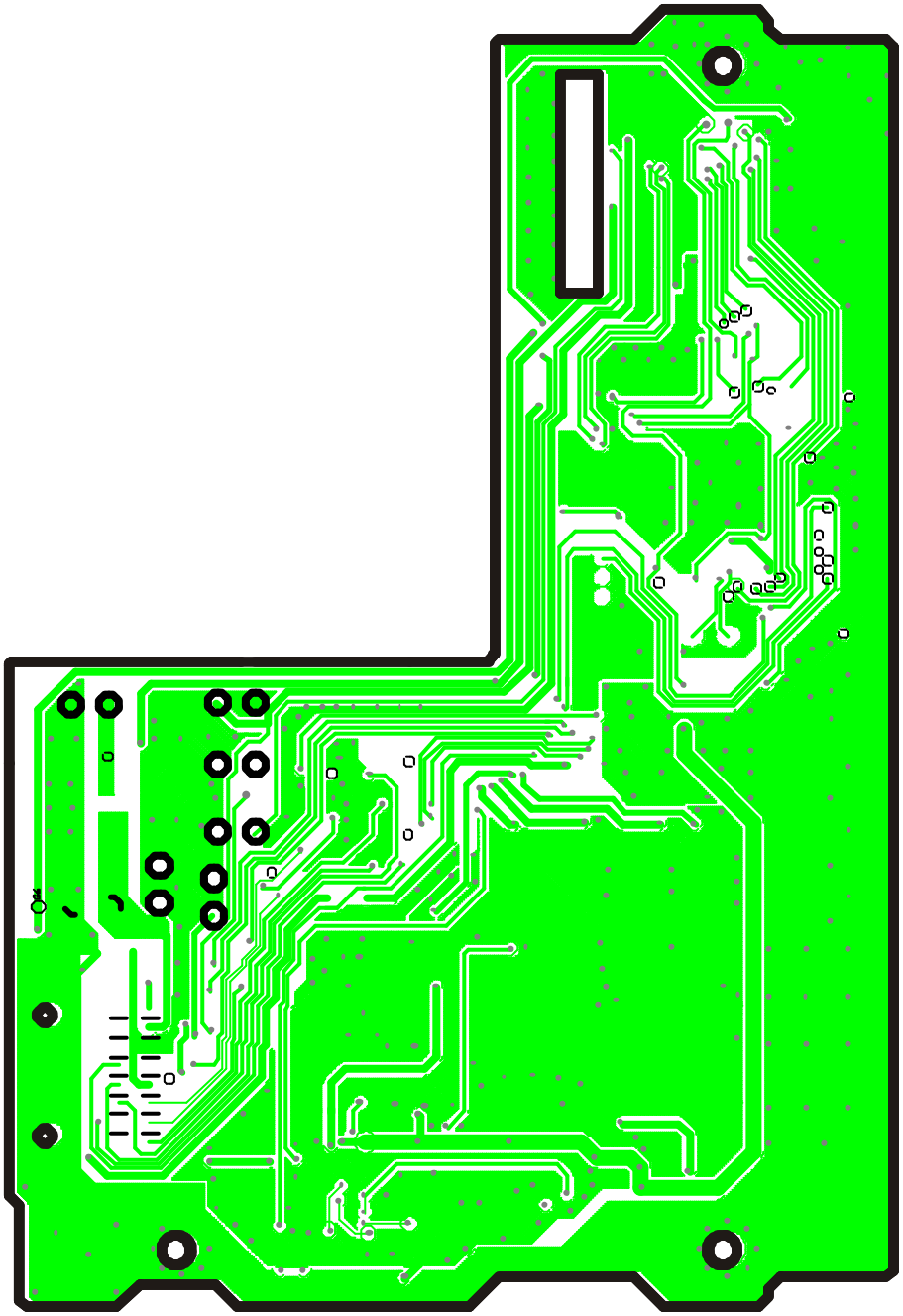

[E-4C902][BOTTOM VIEW]

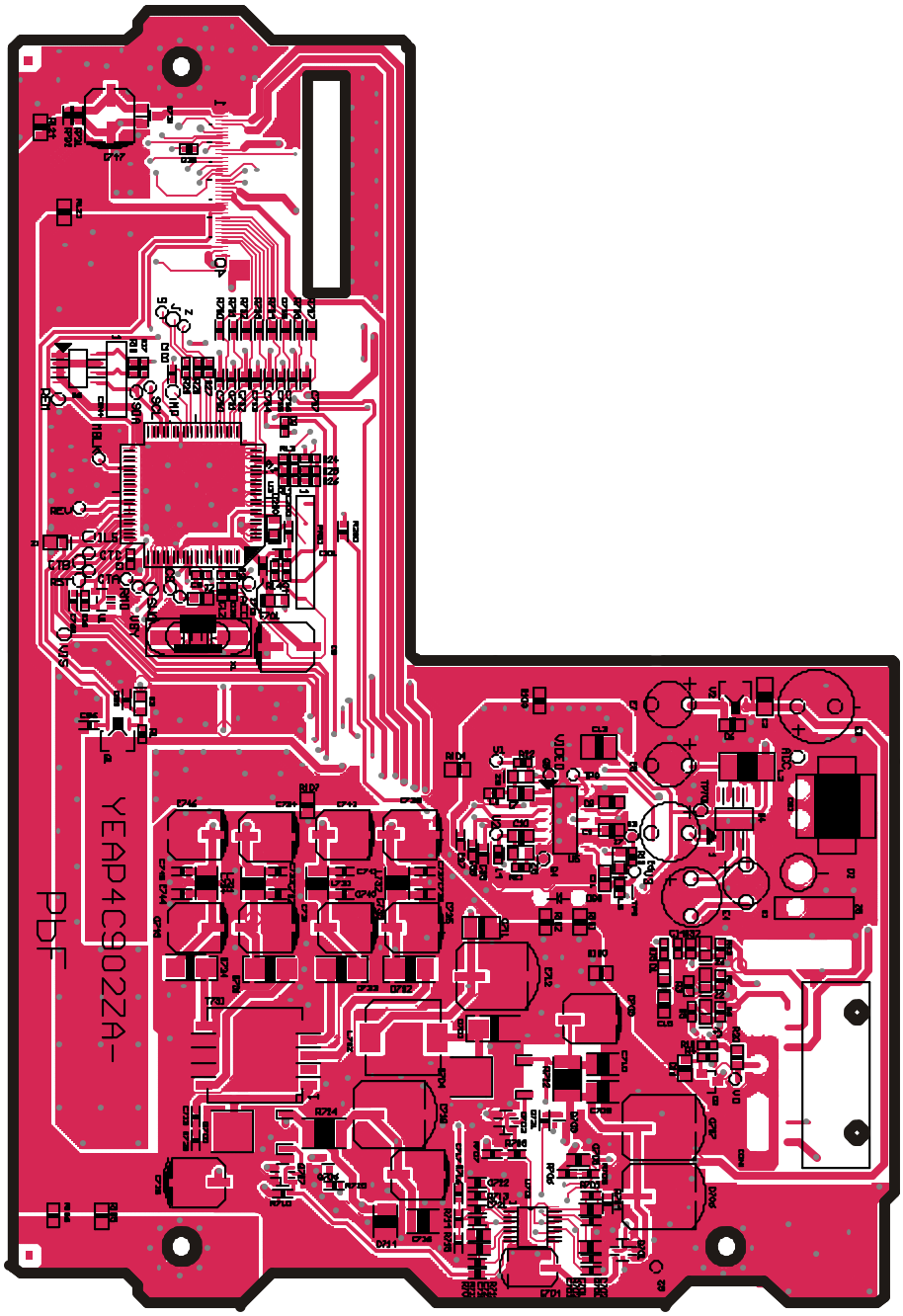

[E-4C902][TOP VIEW]

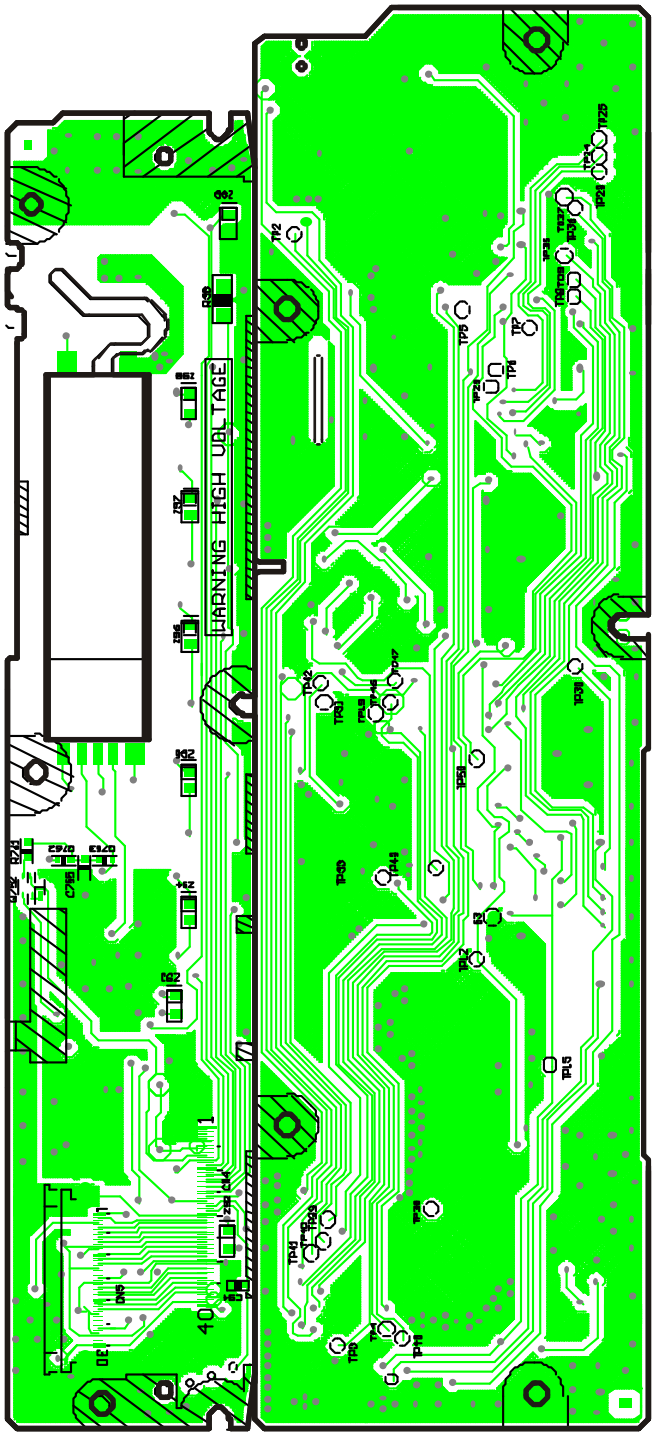

[E-4C903][BUTTOM VIEW]

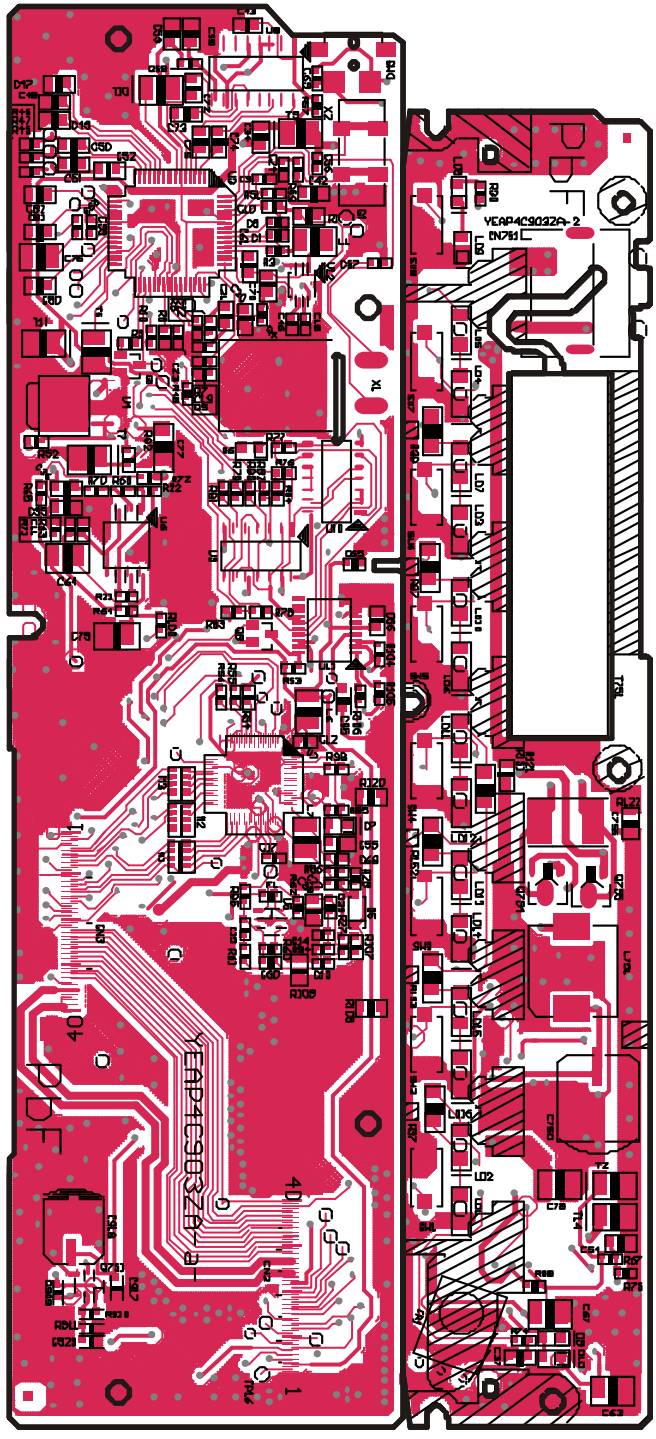

[E-4C903][TOP VIEW]