Panasonic
FM2 8750
LOUD
TUNE
TRACK
AF
MUTE
1
2
3
4
5
PTY
TA

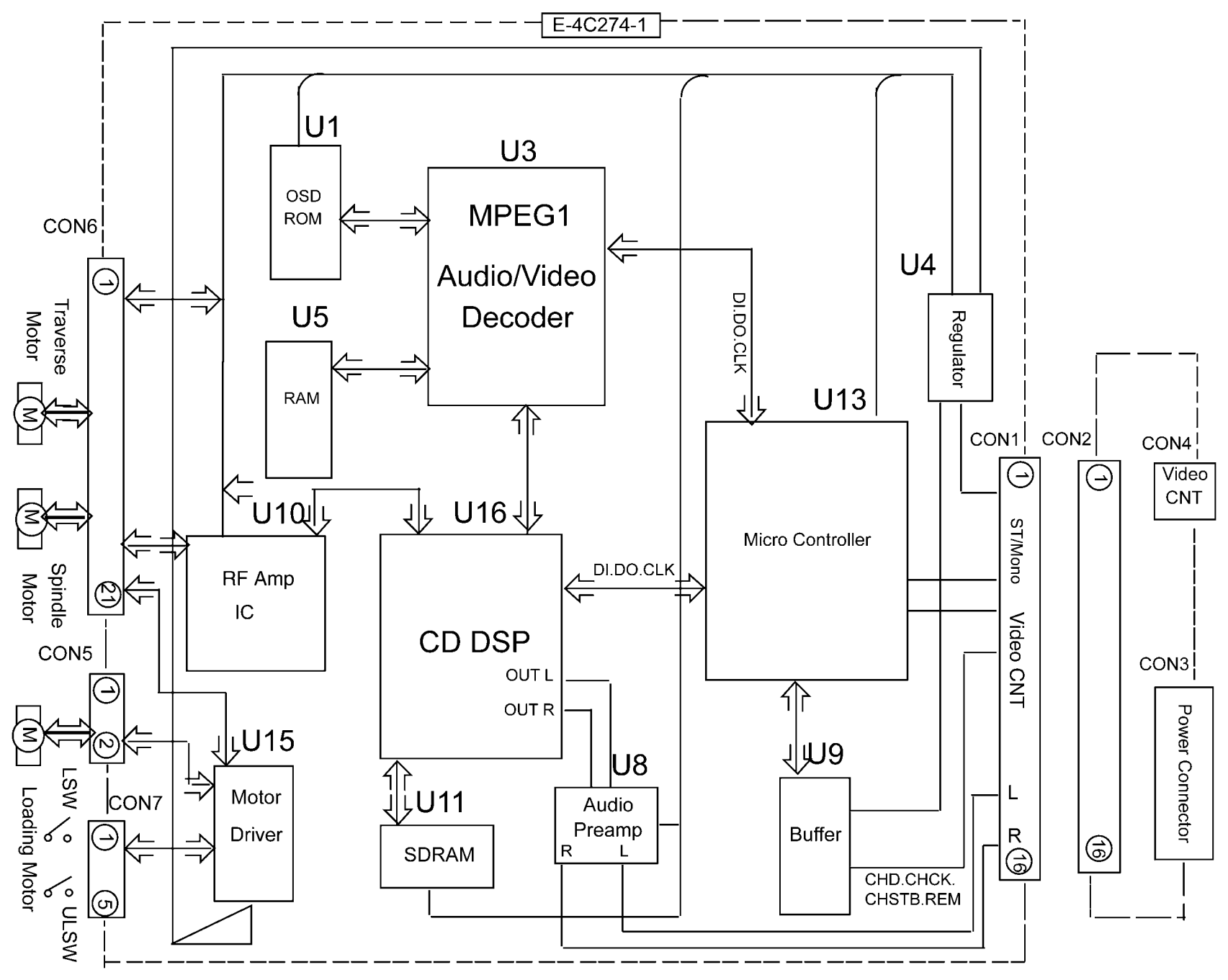
E-4C274-1
U1
OSD ROM
U3
MPEG1
Audio/Video Decoder
U5
RAM
U4
Regulator
U13
Micro Controller
U10
RF Amp IC
U16
CD DSP
OUT L
OUT R
DI.DO.CLK
U15
Motor Driver
U11
SDRAM
U8
Audio Preamp
R
L
U9
Buffer
CHD.CHCK.
CHSTB.REM
CON6
Traverse Motor
Spindle Motor
CON5
LSW
CON7
Loading Motor
ULSW
CON1
ST/Mono
Video CNT
L
R
CON2
CON4
Video CNT
CON3
Power Connector

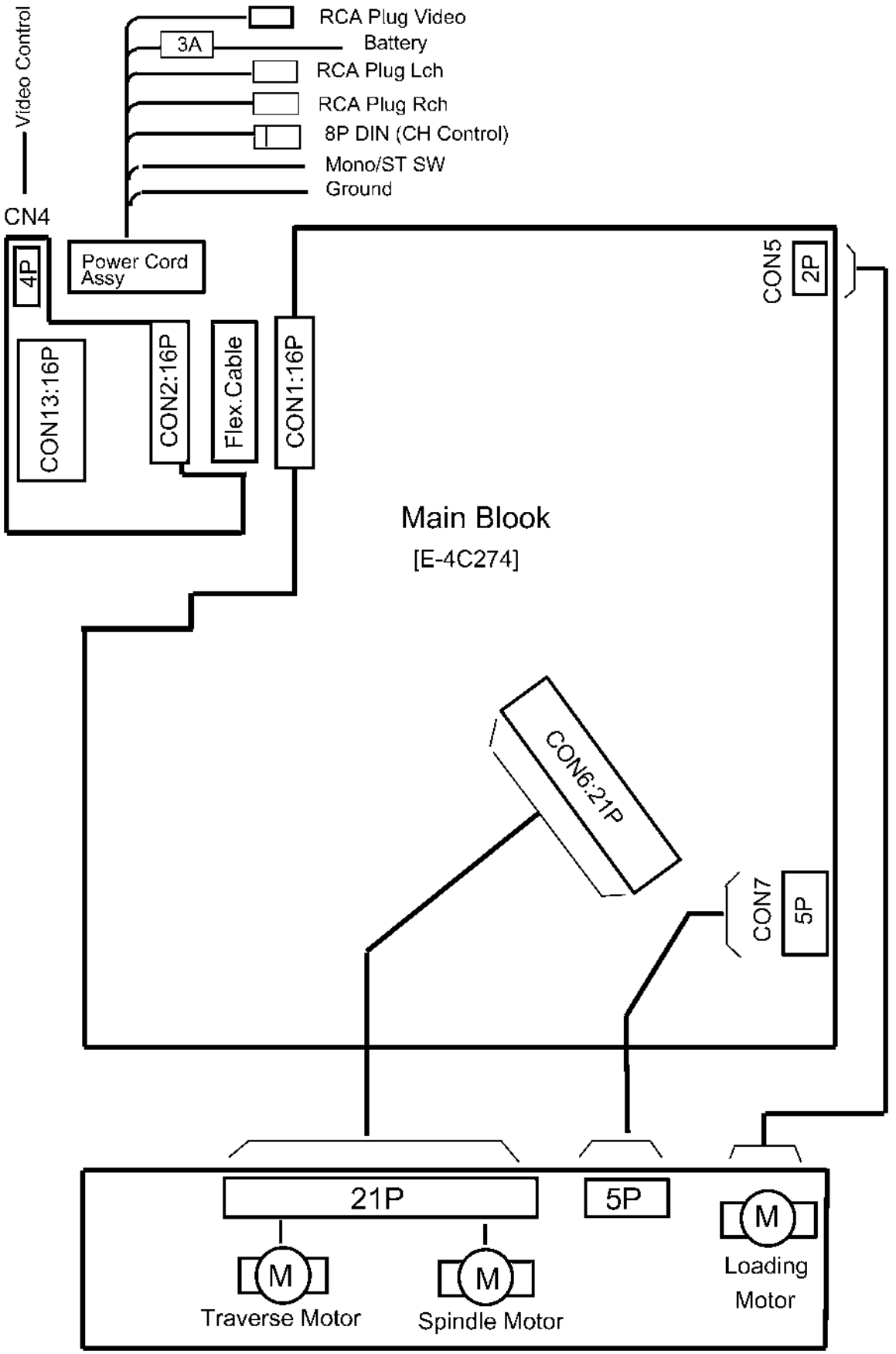
Video Control
RCA Plug Video
3A
Battery
RCA Plug Lch
RCA Plug Rch
8P DIN (CH Control)
Mono/ST SW
Ground
CN4
4P
Power Cord Assy
CON13:16P
CON2:16P
Flex.Cable
CON1:16P
CON5
2P
Main Blook
[E-4C274]
CON6:21P
CON7
5P
21P
5P
M
Traverse Motor
M
Spindle Motor
M
Loading Motor

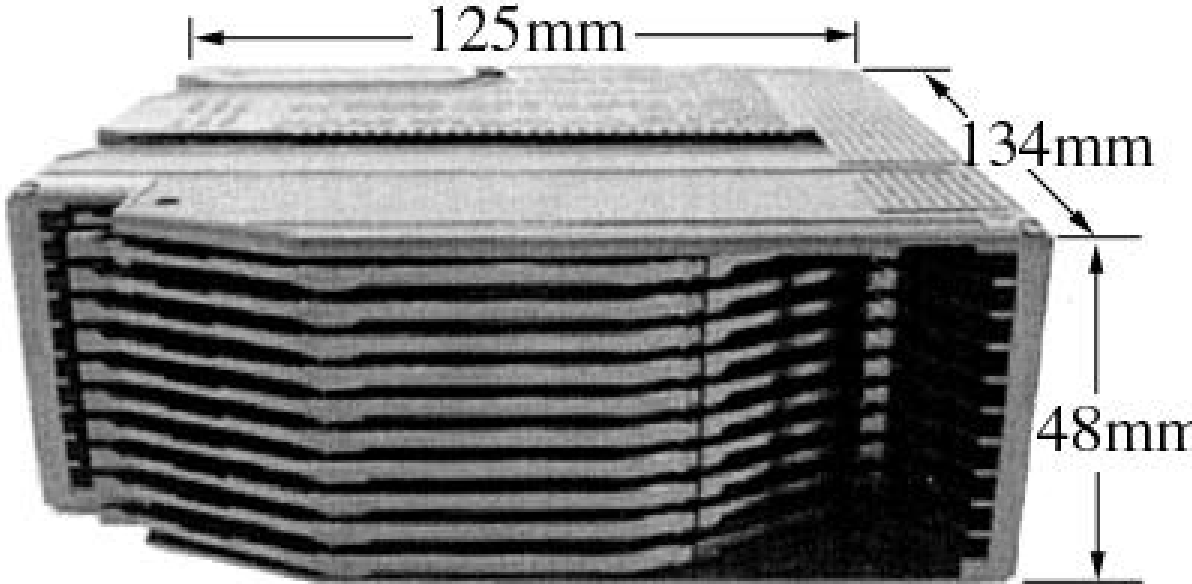
125mm
134mm
48mm

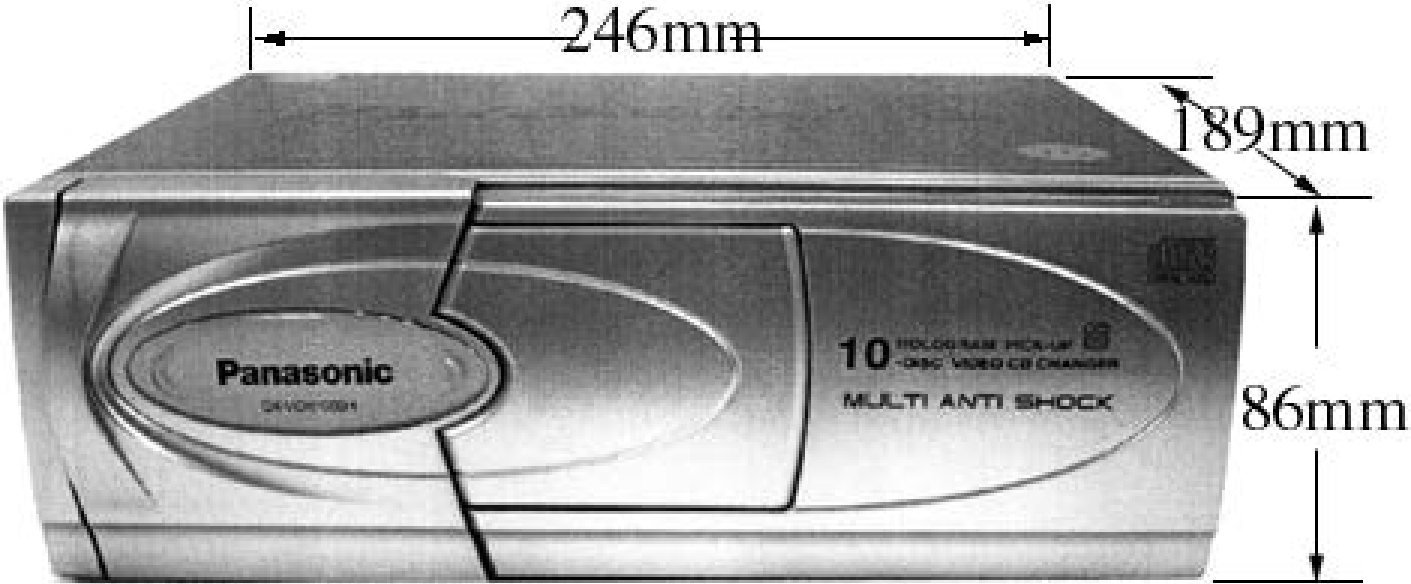
246mm
189mm
86mm
Panasonic
10
MULTI ANTI SHOCK

■ Number in ◯ are indicate REF.No.in the REPLACEMENT PARTS LIST

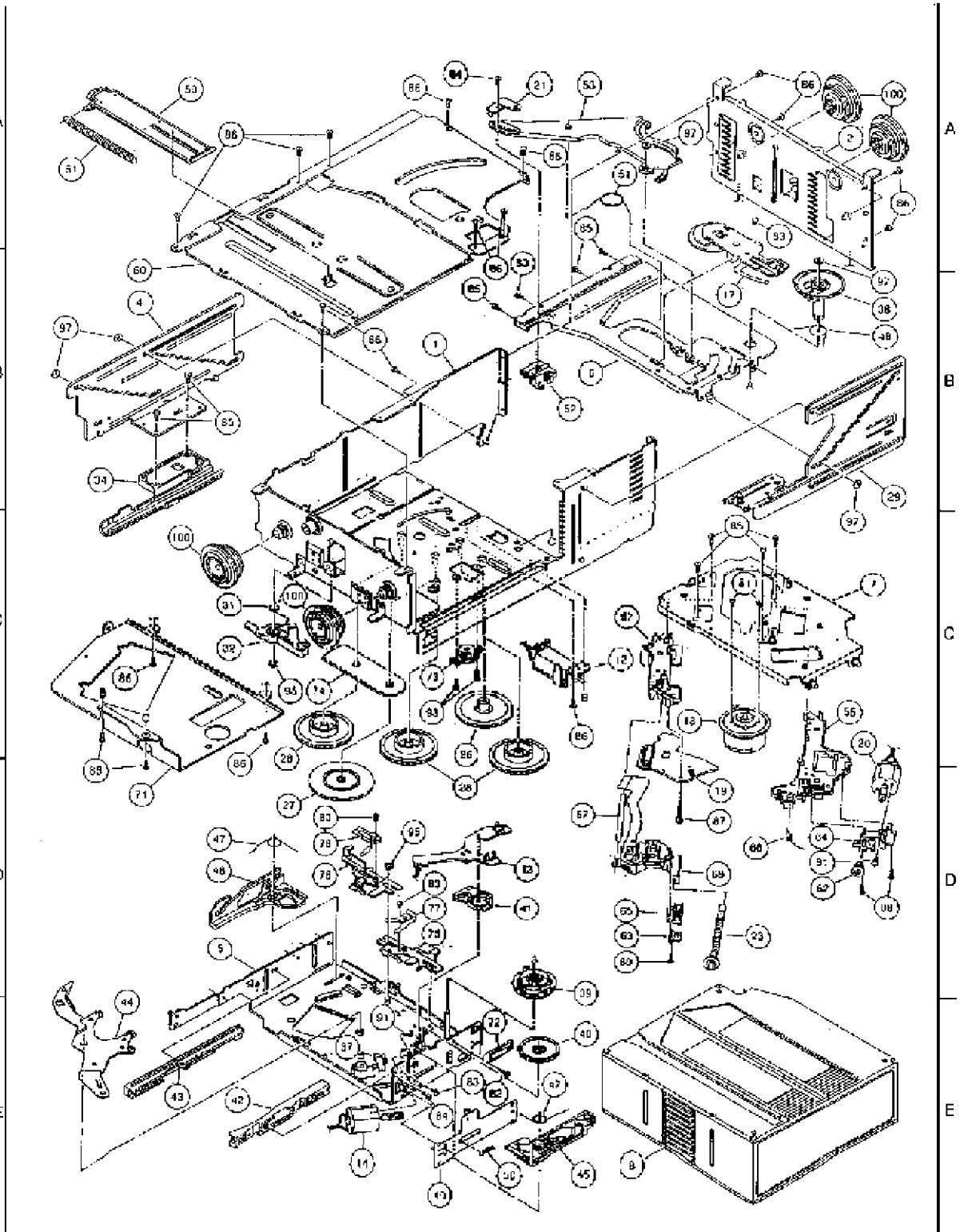

■ Numbers in ○ are indicated REF.No.in the REPLACEMENT PARTS LIST

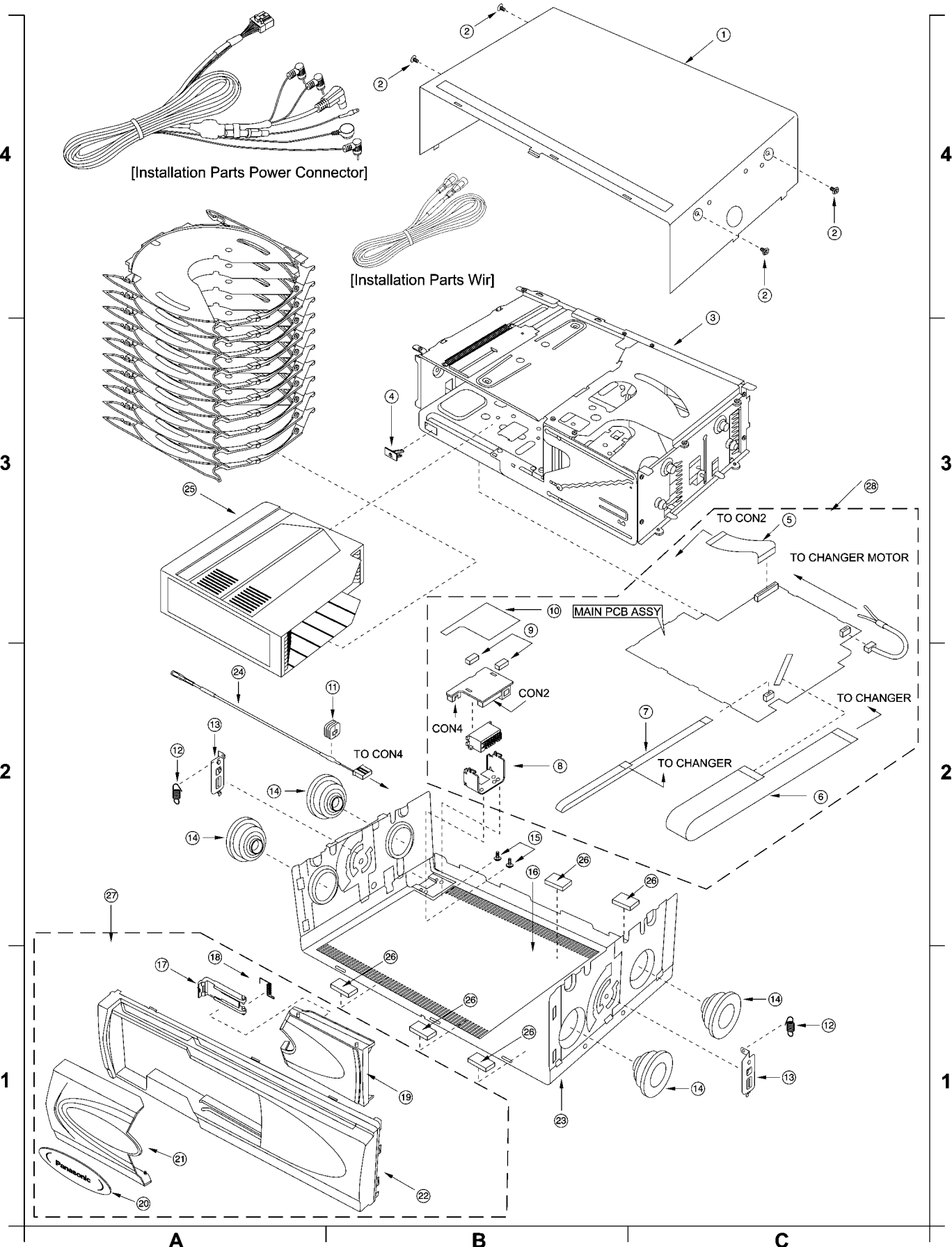

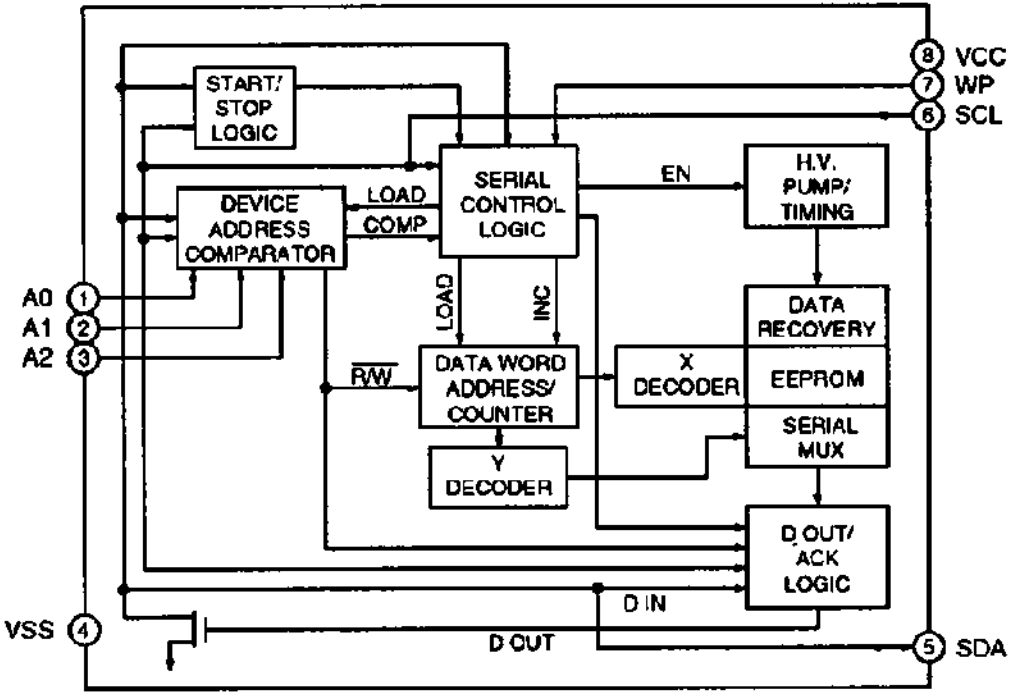

U17 YEAMS24C02A

U5 G440L16-40TC

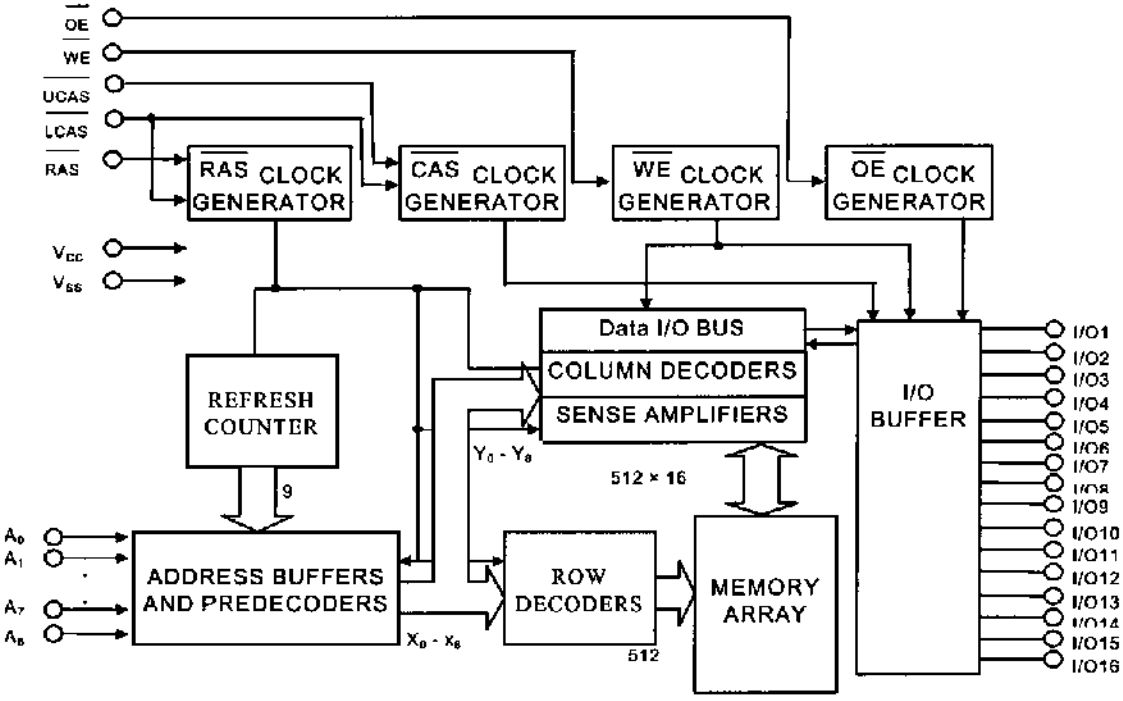

U10 C1BB00000624

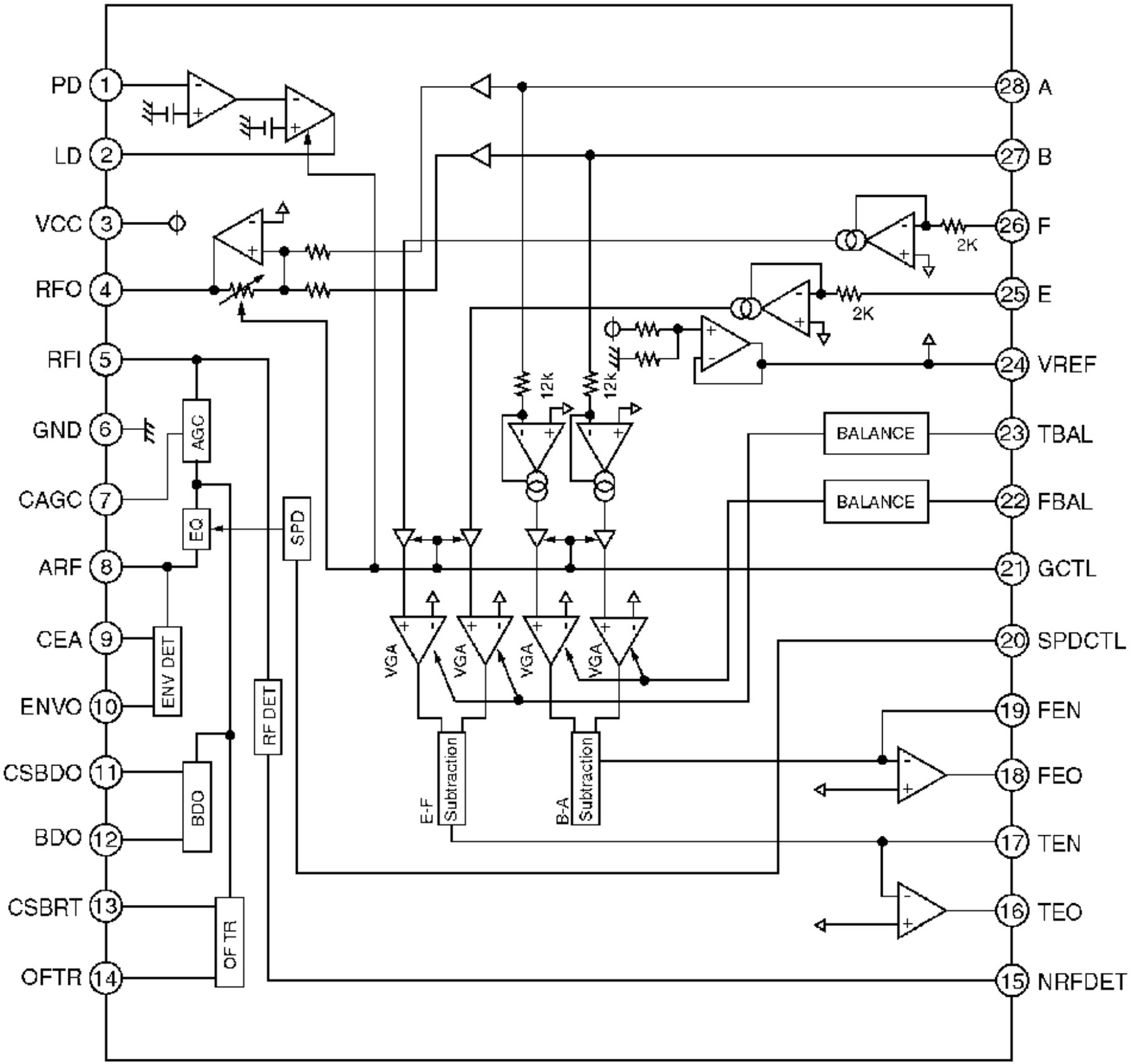

U1 D23C16300714

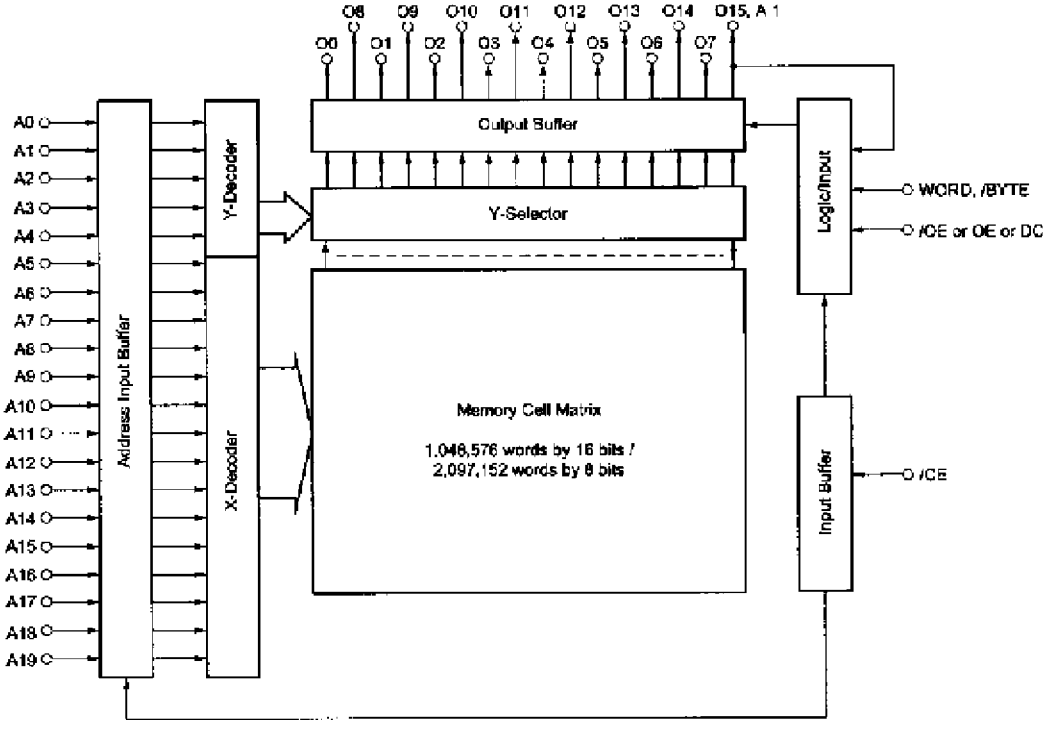

U8 YEAMNJM3414AM

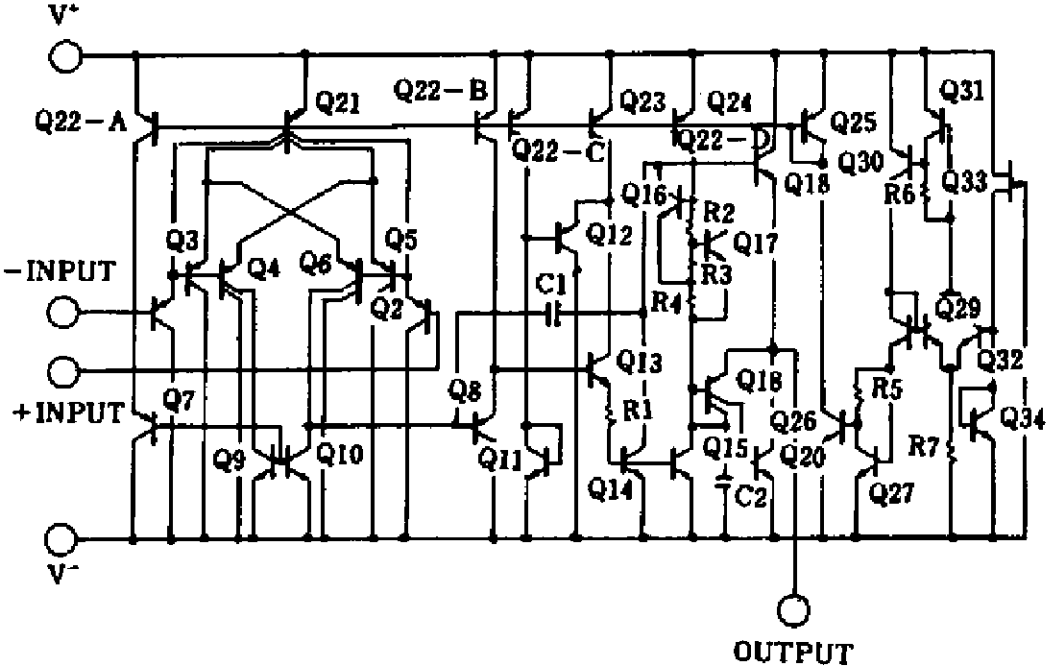

U14 YEAMBD4729G

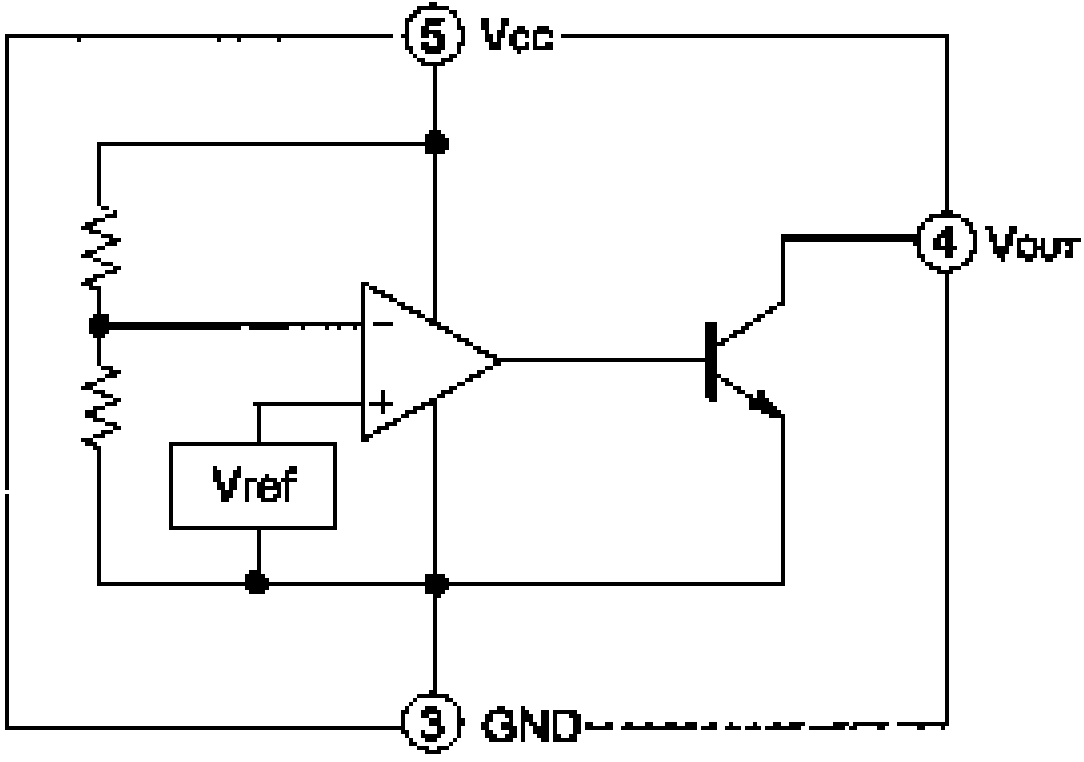

U15 YEAMBD7961FM

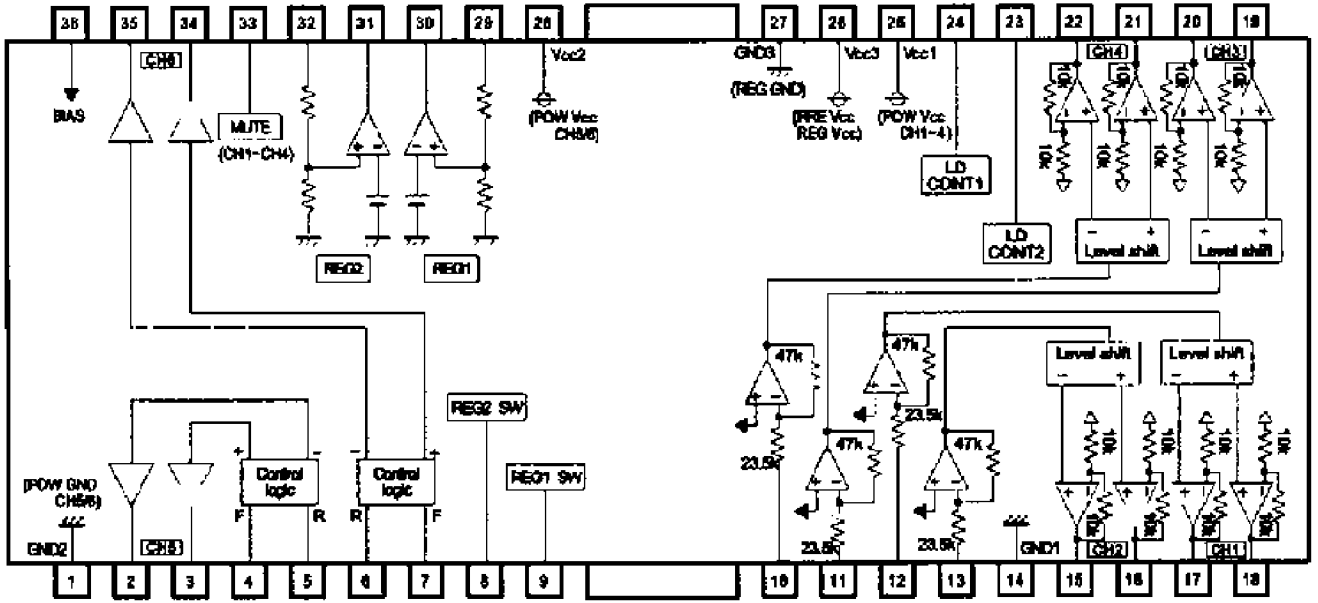

U4 YEAMBA9743FV

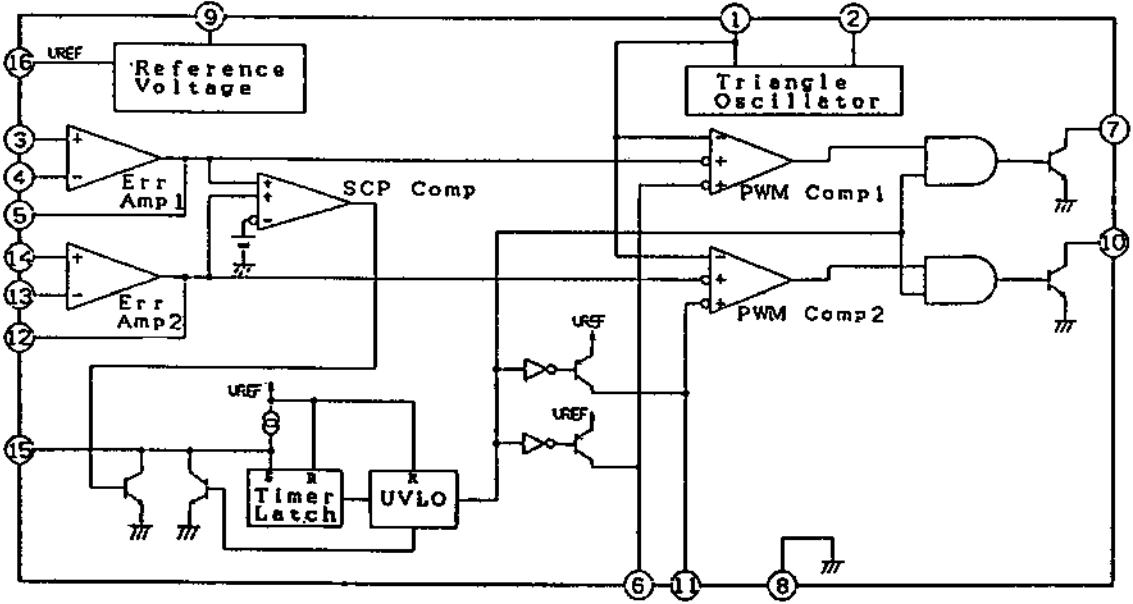

U7 YEAM74HC00FN

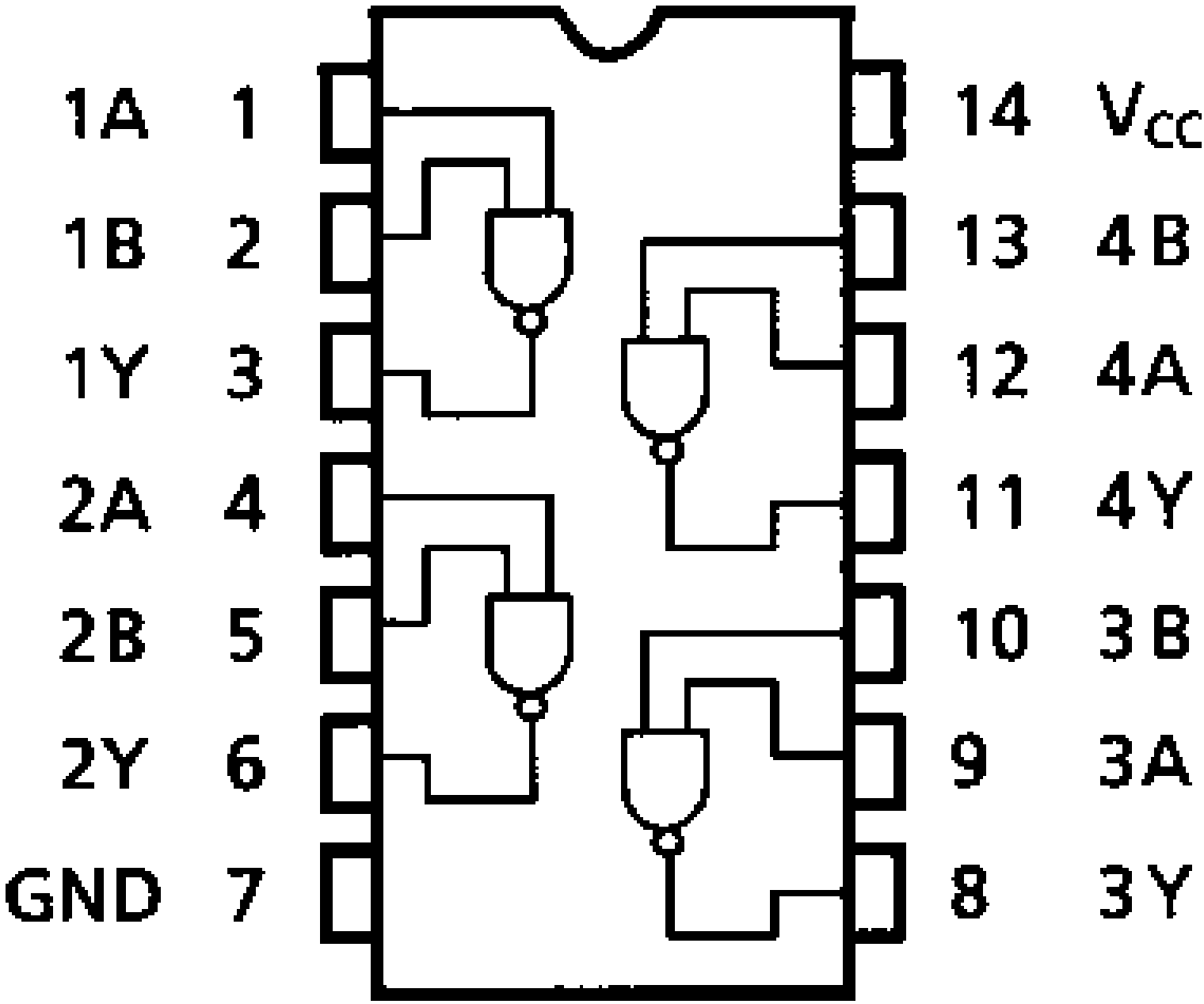

U9 YEAM74HC04FN

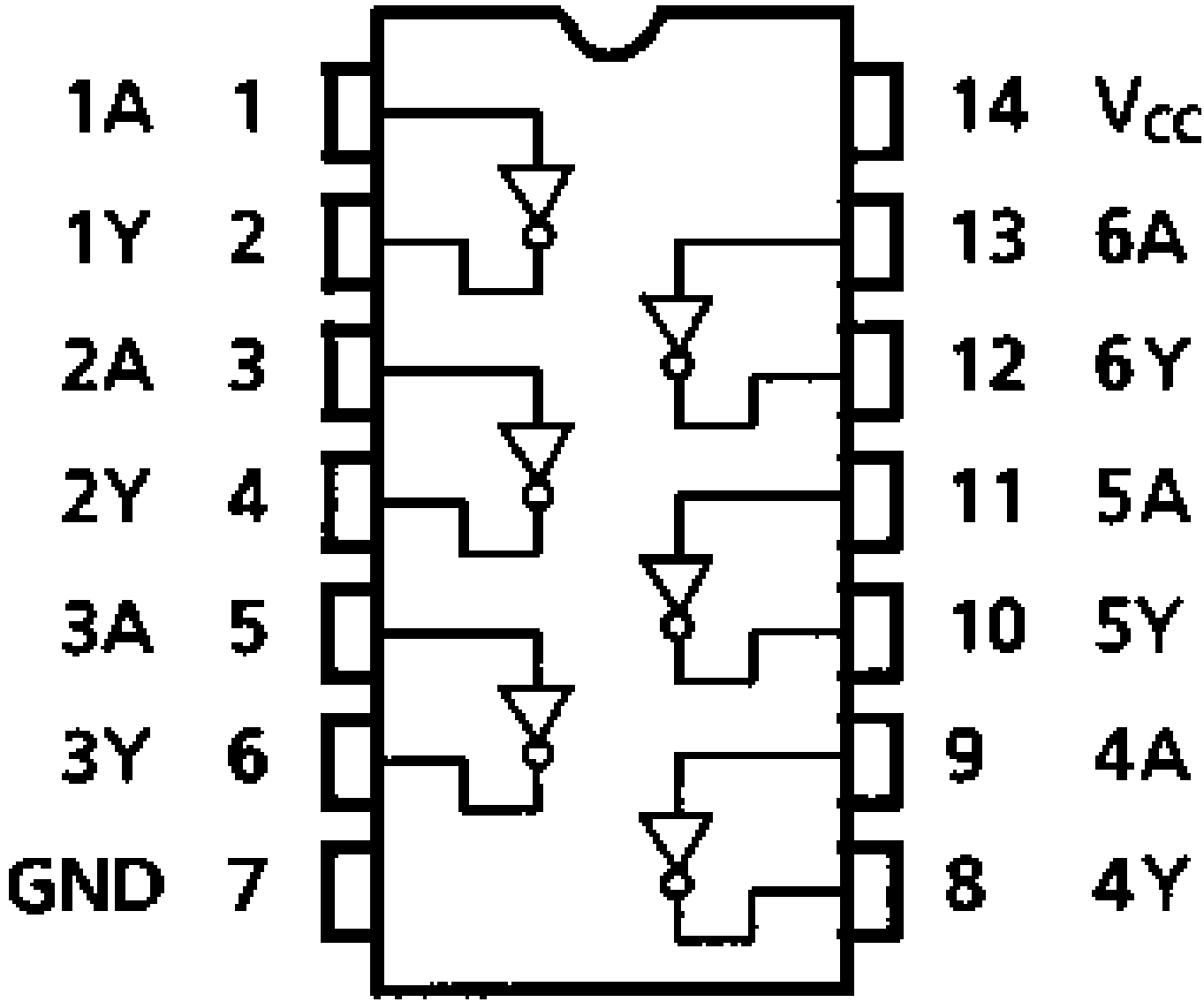

U2 YEAMT7WU04FU

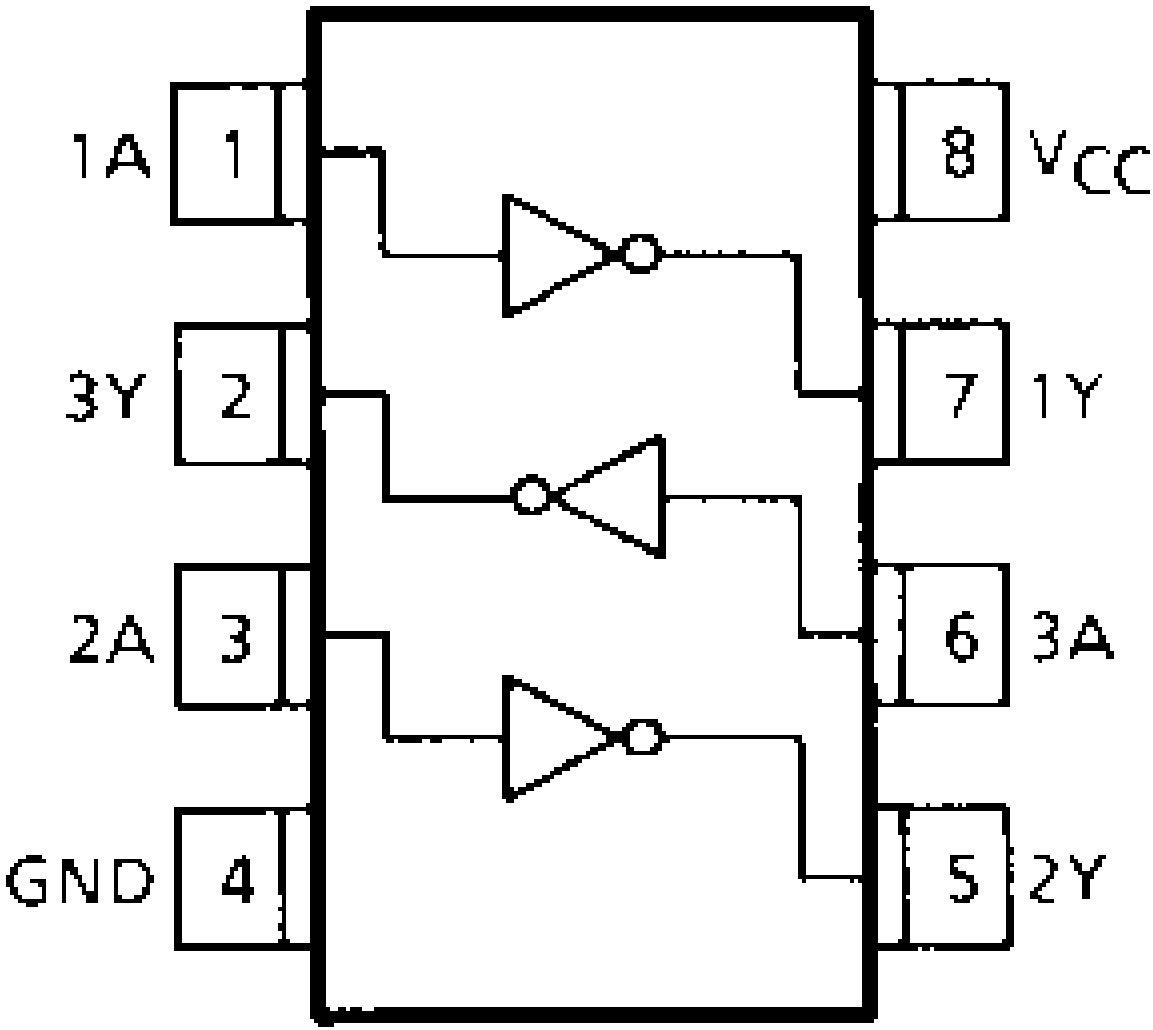

Do not take apart this unit or attempt to make any changes yourself.

This unit is very intricate that uses a laser pickup to retrieve information from the suface of compact discs. The laser is carefully shielded so that its rays remain inside the cabinet. Therefore, never try to disassemble the player or alter any of its parts since you may be exposed to laser rays and dangerous voltages.

Laser products :

Wave length	780nm
Laser power	No hazardous radiation is emitted with safety protection.

Caution

This product utilizes a laser.

Use of controls or adjustments or performance of procedures other than those specified herein may result in hazardous radiation exposure.

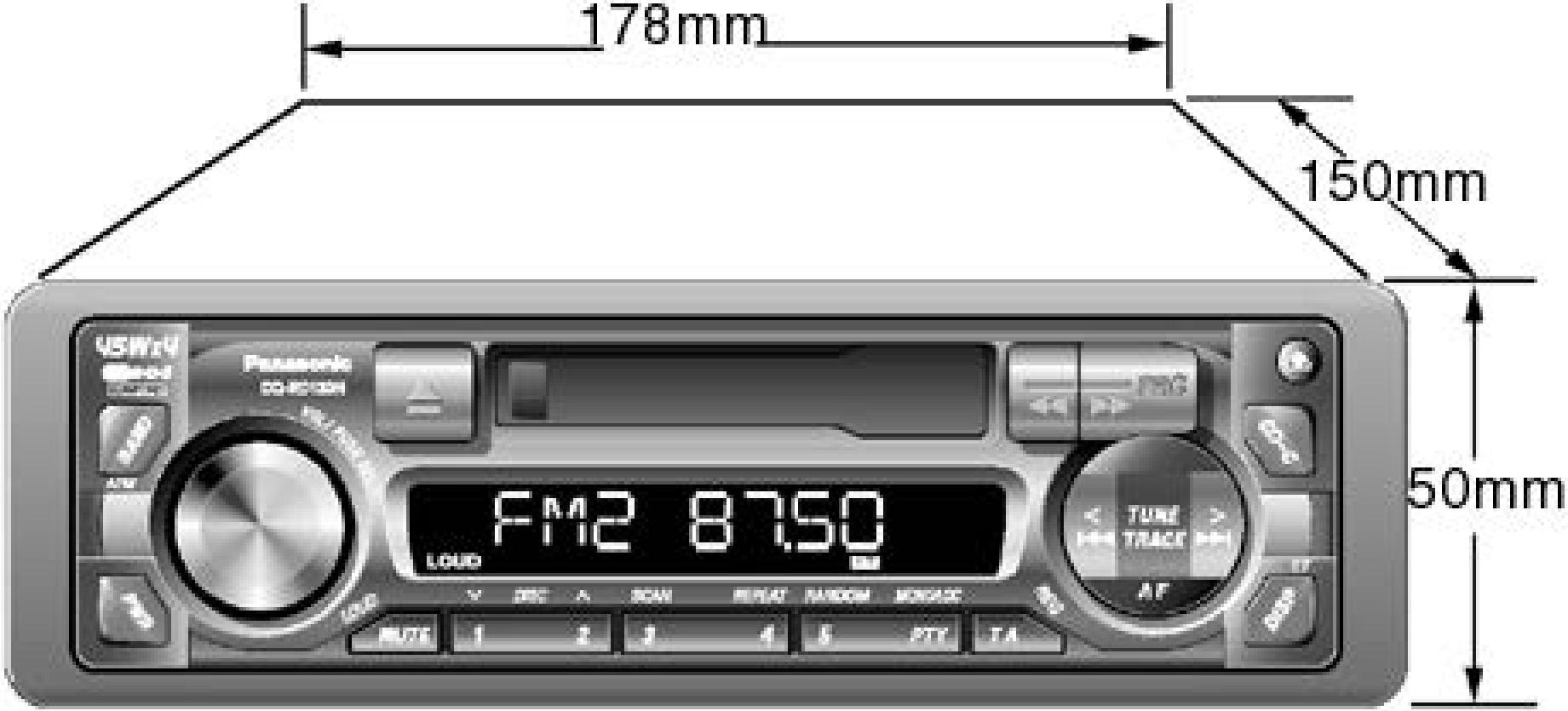
178mm
150mm
50mm
Panasonic
FM2 87.50
LOUD
TUNE
TRACK
AF
MUTE
1
2
3
4
5
PTY
TA

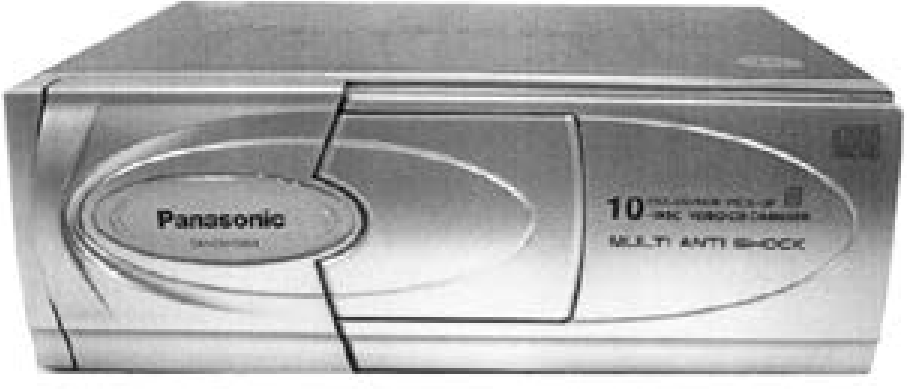
Panasonic
10
MULTI ANTI SHOCK

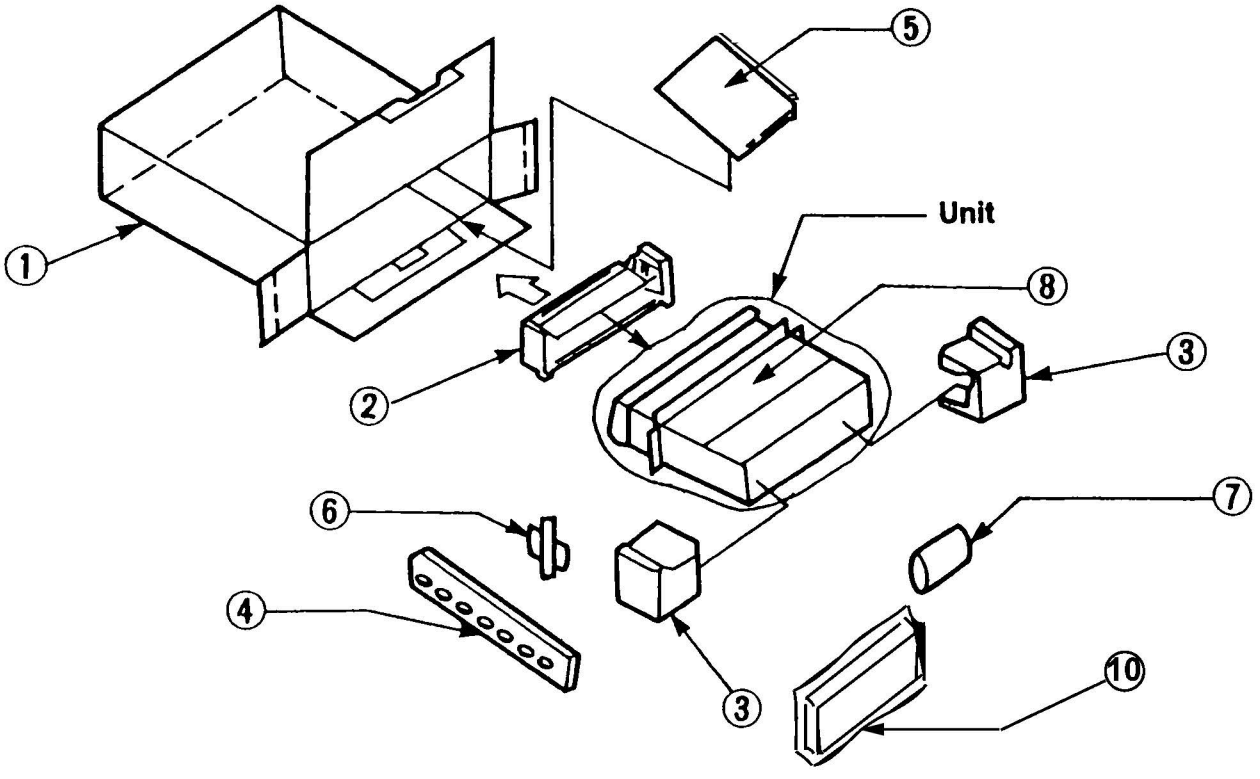

● *Item numbers listed below should not order regular spare parts. (not available)*

Item No.	Parts No.	Parts Name & Description	Q'ty	Remarks
①	—	Inner Carton	1	Not available
②	—	Paking Pad, Front	1	Not available
③	—	Paking Pad, Rihgt and Left	1	Not available
④	YEFG044C002	Rear Support Strap	1	
⑤				
	YFM284C359CA	Operating Instructions	1	
	YFM074C134CA	Warranty Card	1	
⑥	ZZBISR221	Screw Kit and Dismounting Pin	1	
⑦	YAJ024C090YA	Power Connector Ass'y	1	
⑧	YEFX0214198A	Mounting Collar	1	
⑨				
⑩	YFC054C052ZA	Unit Case	1	

Note:

1. Be sure to make your orders of replacement parts according to this list.
2. Important safty notice: Component , indentified by ⚠ mark have special characteristics important for safety. when replacing any of these components, use only manufacturer's specified parts.
3. Location keys in the remarks column indicates the general location of the parts shown in the exploded drawing. as in a load map.
4. The marking (RTL) indicates that Retention Time is linited for this item. After the discontinuation of assembly in production, the item will continue to be availability is dependent on the type of assembly, and in accordance with the laws governing part and product retention. Aft the end of this period, the assembly will no longer be available.
5. "T" marks in remarks colum are indicated supply parts of TAMACO.

Note:

1. Be sure to make your orders of replacement parts according to this list.
2. Important safty notice: Component , indentified by ⚠ mark have special characteristics important for safety. when replacing any of these components, use only manufacturer's specified parts.
3. Location keys in the remarks column indicates the general location of the parts shown in the exploded drawing. as in a load map.
4. The marking (RTL) indicates that Retention Time is linited for this item. After the discontinuation of assembly in production, the item will continue to be availability is dependent on the type of assembly, and in accordance with the laws governing part and product retention. Aft the end of this period, the assembly will no longer be available.
5. "T" marks in remarks colum are indicated supply parts of TAMACO.

Note:

1. Be sure to make your orders of replacement parts according to this list.
2. Important safty notice: Component , indentified by ⚠ mark have special characteristics important for safety. when replacing any of these components, use only manufacturer's specified parts.
3. Location keys in the remarks column indicates the general location of the parts shown in the exploded drawing. as in a load map.
4. The marking (RTL) indicates that Retention Time is **limited** for this item. After the discontinuation of assembly in production, the item will continue to be availability is dependent on the type of assembly, and in accordance with the laws governing part and product retention. Aft the end of this period, the assembly will no longer be available.
5. "T" marks in remarks colum are indicated supply parts of TAMACO.

- **Order intake period is basically six months after the first shipment**

Note:

1. Be sure to make your orders of replacement parts according to this list.
2. Important safty notice: Component , indentified by ⚠ mark have special characteristics important for safety. when replacing any of these components, use only manufacturer's specified parts.
3. Location keys in the remarks column indicates the general location of the parts shown in the exploded drawing. as in a load map.
4. The marking (RTL) indicates that Retention Time is **limited** for this item. After the discontinuation of assembly in production, the item will continue to be availability is dependent on the type of assembly, and in accordance with the laws governing part and product retention. Aft the end of this period, the assembly will no longer be available.
5. "T" marks in remarks colum are indicated supply parts of TAMACO.

- **Order intake period is basically six months after the first shipment**

Note:

1. Be sure to make your orders of replacement parts according to this list.
2. Important safty notice: Component , indentified by ⚠ mark have special characteristics important for safety. when replacing any of these components, use only manufacturer's specified parts.
3. Location keys in the remarks column indicates the general location of the parts shown in the exploded drawing. as in a load map.
4. "T" marks in remarks colum are indicated supply parts of TAMACO.

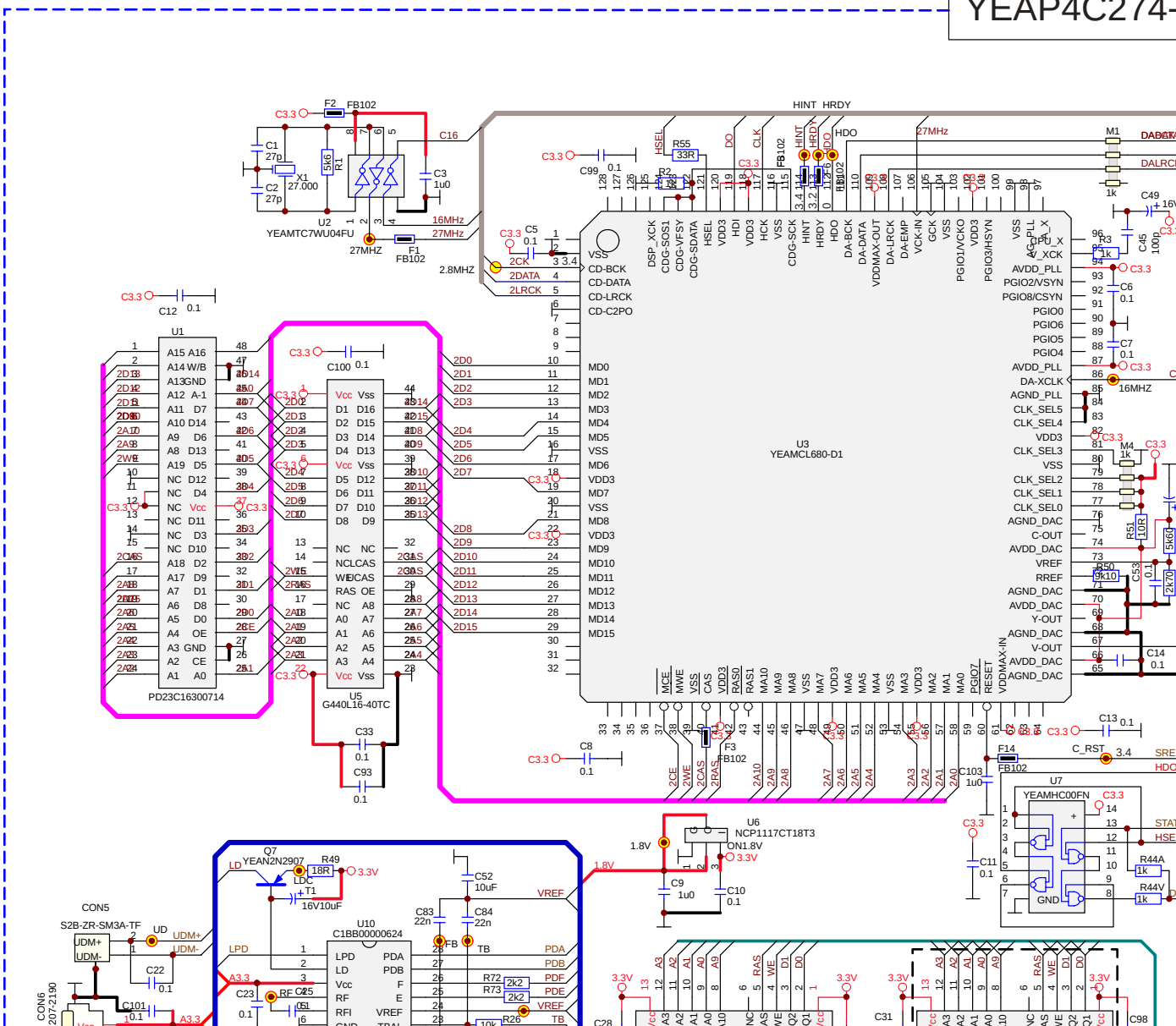
YEAP4C274-
U3
YEAMCL680-D1
U1
PD23C16300714
U5
G440L16-40TC
U2
YEAMTC7WU04FU
U6
NCP1117CT18T3
U7
YEAMHC00FN
U10
C1BB00000624
U11
YEAMDRAM0001
U12 (Not Used)
MSM51V17400
U15
YEAMBD7961FM
U16
MNG7911AC10C
CON5
S2B-ZR-SM3A-TF
CON6
52207-2190
CON7
52207-0590
Q7
YEAN2N2907
Q2
YEAN2N2970
Q3
YEAN2N2970
X1
27.000
16MHZ
16.9MHZ
27MHZ
2.8MHZ

EAP4C274-1

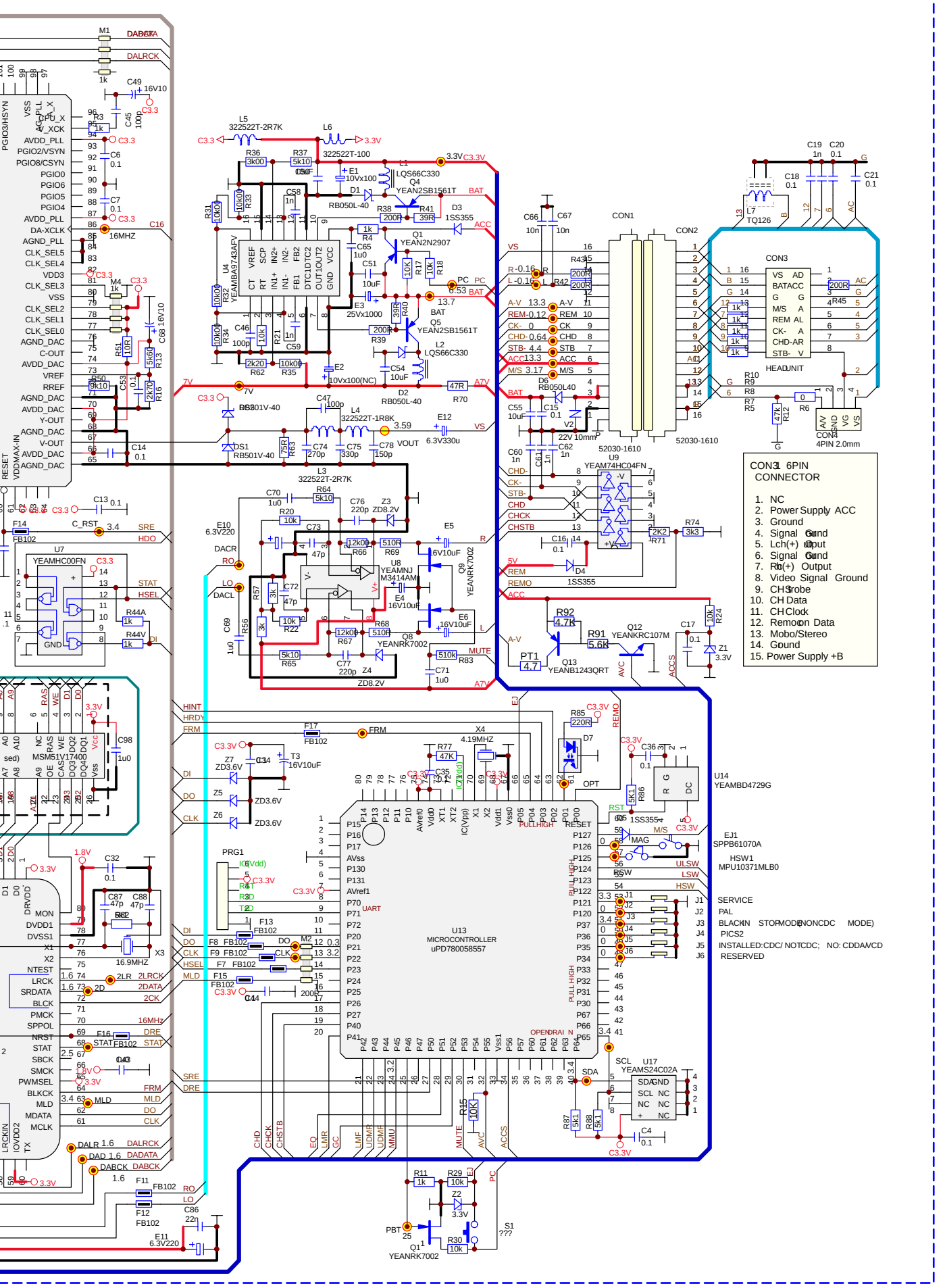
CON3 1 6PIN CONNECTOR
1. NC
2. Power Supply ACC
3. Ground
4. Signal Ground
5. Lch(+) Output
6. Signal Ground
7. Rch(+) Output
8. Video Signal Ground
9. CHS Strobe
10. CH Data
11. CH Clock
12. Remocon Data
13. Mobo/Stereo
14. Ground
15. Power Supply +B
U13
MICROCONTROLLER
uPD780058557
U4
YEAMBA9743AFV
U7
YEAMHC00FN
U8
YEAMNJ
M3414AM
U9
YEAM74HC04FN
U14
YEAMBD4729G
U17
YEAMS24C02A
CON1
CON2
CON3
CON4
4PIN 2.0mm
HEADUNIT
52030-1610
EJ1
SPPB61070A
HSW1
MPU10371MLB0
SERVICE
PAL
BLACKIN STOPMODE(NONCDC MODE)
PICS2
INSTALLED:CDC/ NOTCDC; NO: CDDA/VCD
RESERVED

YEAP4C274-1

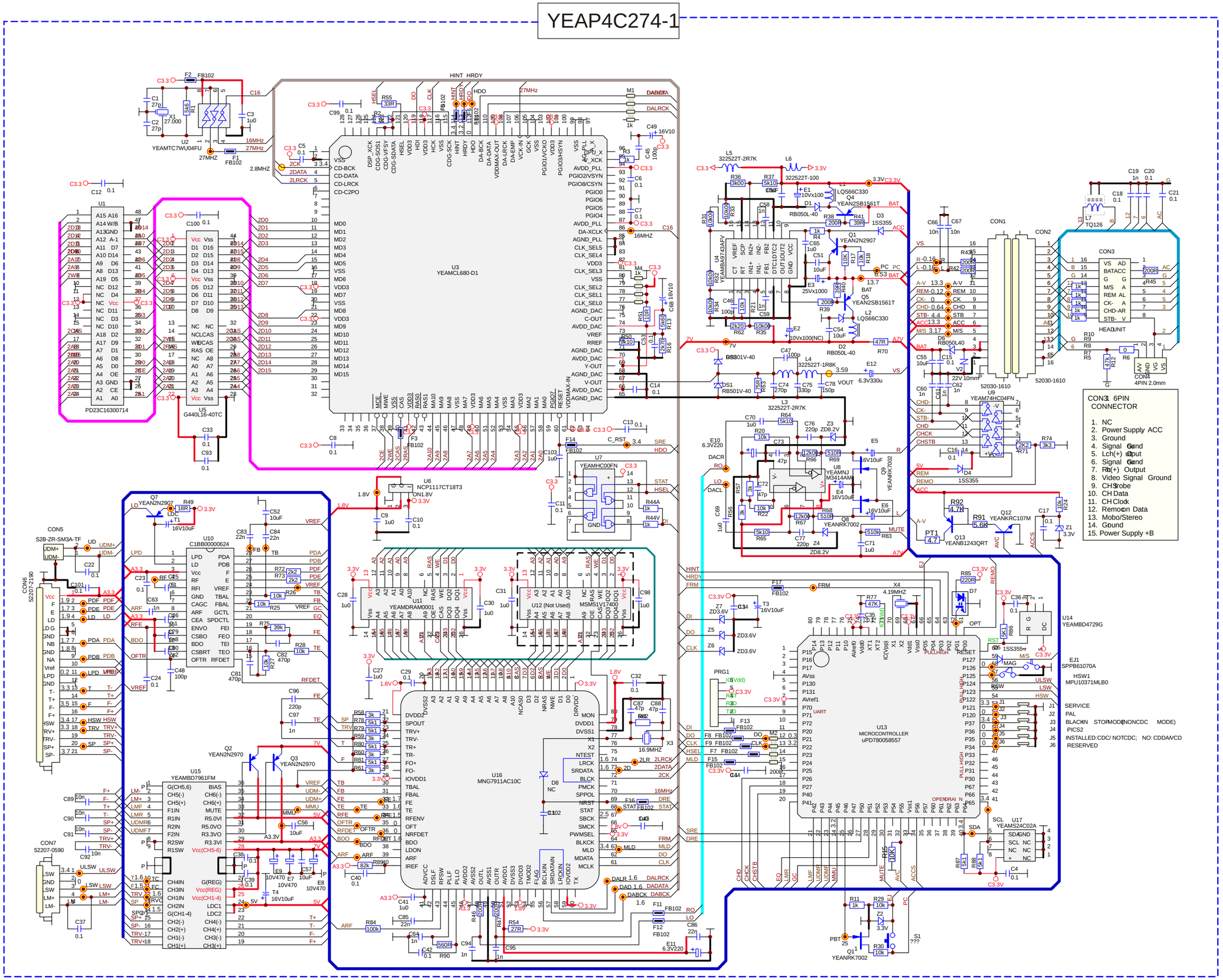

CXVCH1000H MAIN BLOCK

Printed in Taiwan 2004.01

Specifications*

Power Suplay	DC 12V (11V - 16V) Test Voltage 14.4V Negative Ground
Current Consumption	Less than 1.0A (Play mode)
Output Voltage	2Vrms (at 1kHz,0dB)
Output Impedance	600 Ω
Frequency Response	17Hz to 20,000Hz (at 1dB Video)
Usable Sensitivity	11.0 dBf (1.25μ V, 75 Ω)
Signal to Noise Ratio	96dB
Wow and Flutter	Below measurable limits

Dimensions**	
Video CD Changer Unit	246(W)x86(H)x189(D)mm
Disc Magazine Unit	125(W)x48(H)x134(D)mm
Weight**	:
Video CD Changer Unit	2.1kg
Disc Magazine Unit	0.24kg

*Specifications and the design are subject to possible modification without notice due to improvement.
**Dimensions and Weight shown are approximate.

ORDER No. ACED031288C3
C4

Service Manual

AUTOMOTIVE AFTERMARKET

VIDEO CD

COMPACT disc DIGITAL VIDEO

COMPACT disc DIGITAL AUDIO

CX-VCH1000H

10-Disc Video CD Changer

Specification*

Power Suplay	DC 12V (11V - 16V) Test Voltage 14.4V Negative Ground
Current Consumption	Less than 1.0A (Play mode)
Output Voltage	2Vrms (at 1kHz,0dB)
Output Impedance	600 Ω
Frequency Response	17Hz to 20,000Hz (at 1dB Video)
Usable Sensitivity	11.0 dBf (1.25μ V, 75 Ω)
Signal to Noise Ratio	96dB
Wow and Flutter	Below measurable limits

Dimensions**	
Video CD Changer Unit	246(W)x86(H)x189(D)mm
Disc Magazine Unit	125(W)x48(H)x134(D)mm
Weight**	:
Video CD Changer Unit	2.1kg
Disc Magazine Unit	0.24kg

*Specifications and the design are subject to possible modification without notice due to improvement.
**Dimensions and Weight shown are approximate.

⚠ WARNING

This service information is designed for experienced repair technicians only and is not designed for use by the general public. It does not contain warnings or cautions to advise non-technical individuals of potential dangers in attempting to service a product. Products powered by electricity should be serviced or repaired only by experienced professional technicians. Any attempt to service or repair the product or products dealt with in this service information by anyone else could result in serious injury or death.

IMPORTANT SAFETY NOTICE

There are special components used in this equipment which are important for safety. These parts are marked by ⚠ in the Schematic Diagrams, Circuit Board Diagrams, Exploded Views and Replacement Parts List. It is essential that these critical parts should be replaced with manufacturer's specified parts to prevent shock, fire or other hazards. Do not modify the original design without permission of manufacturer.

Panasonic®

© 2004 Matsushita Electric Industrial Co., Ltd. All rights reserved. Unauthorized copying and distribution is a violation of law.

CONTENTS

	Page
1 FEATURES	2
2 REPLACING THE FUSE	2
3 MAINTENANCE	2
4 LASER PRODUCTS	2
5 DIMENSIONS	2
6 WIRING CONNECTION	3
7 BLOCK DIAGRAM	4
8 TERMINALS DESCRIPTION	5
9 PACKAGE AND IC BLOCK DIAGRAM	7
10 REPLACEMENT PARTS LIST (Unit)	11
11 EXPLODED VIEW (Unit)	14
12 REPLACEMENT PARTS LIST (VCD Changer Parts)	15
13 EXPLODED VIEW (VCD CHANGER)	16
14 WIRING DIAGRAM	17
15 SCHEMATIC DIAGRAM (Main Block)	19
16 SCHEMATIC DIAGRAM for printing with letter size	21

1 FEATURES

- 10-Disc Video CD Magazine
- The Video CD Changer Can Be mounted at any of the following 3 angles : 0°,45°,90°

2 REPLACING THE FUSE

Be sure to use a fuse of the specified rating (3A) when replacing a blown fuse. Fuses with higher capacity ratings,use of any substitute, or connection without a fuse may result in a fire hazard or damage to the unit.

3 MAINTENANCE

Your product is designed and manufactured to ensure a minimum of maintenance. Use a soft cloth for routine exterior cleaning. Never use benzine, or other solvent.

4 LASER PRODUCTS

Do not take apart this unit or attempt to make any changes yourself.
This unit is very intricate that uses a laser pickup to retrieve information from the suface of compact discs. The laser is carefully shielded so that its rays remain inside the cabinet. Therefore, never try to disassemble the player or alter any of its parts since you may be exposed to laser rays and dangerous voltages.

Laser products :

Wave length	780nm
Laser power	No hazardous radiation is emitted with safety protection.

Caution
This product utillzes a laser.
Use of controls or adjustments or performance of procedures other than those specified herein may result in hazardous radiation exposure.

5 DIMENSIONS

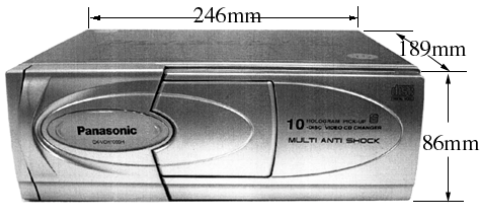

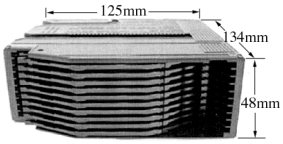

6 WIRING CONNECTION

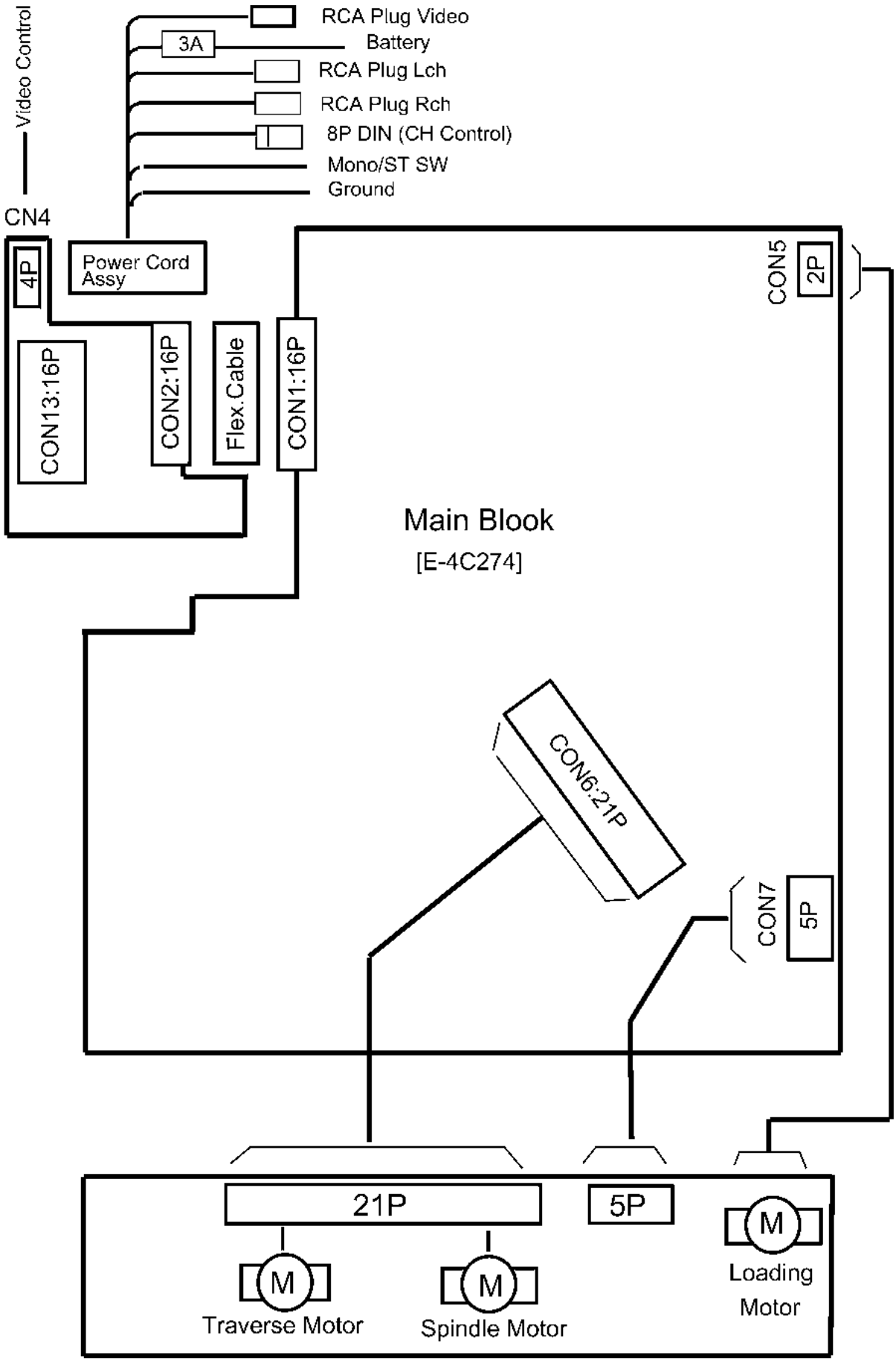

7 BLOCK DIAGRAM

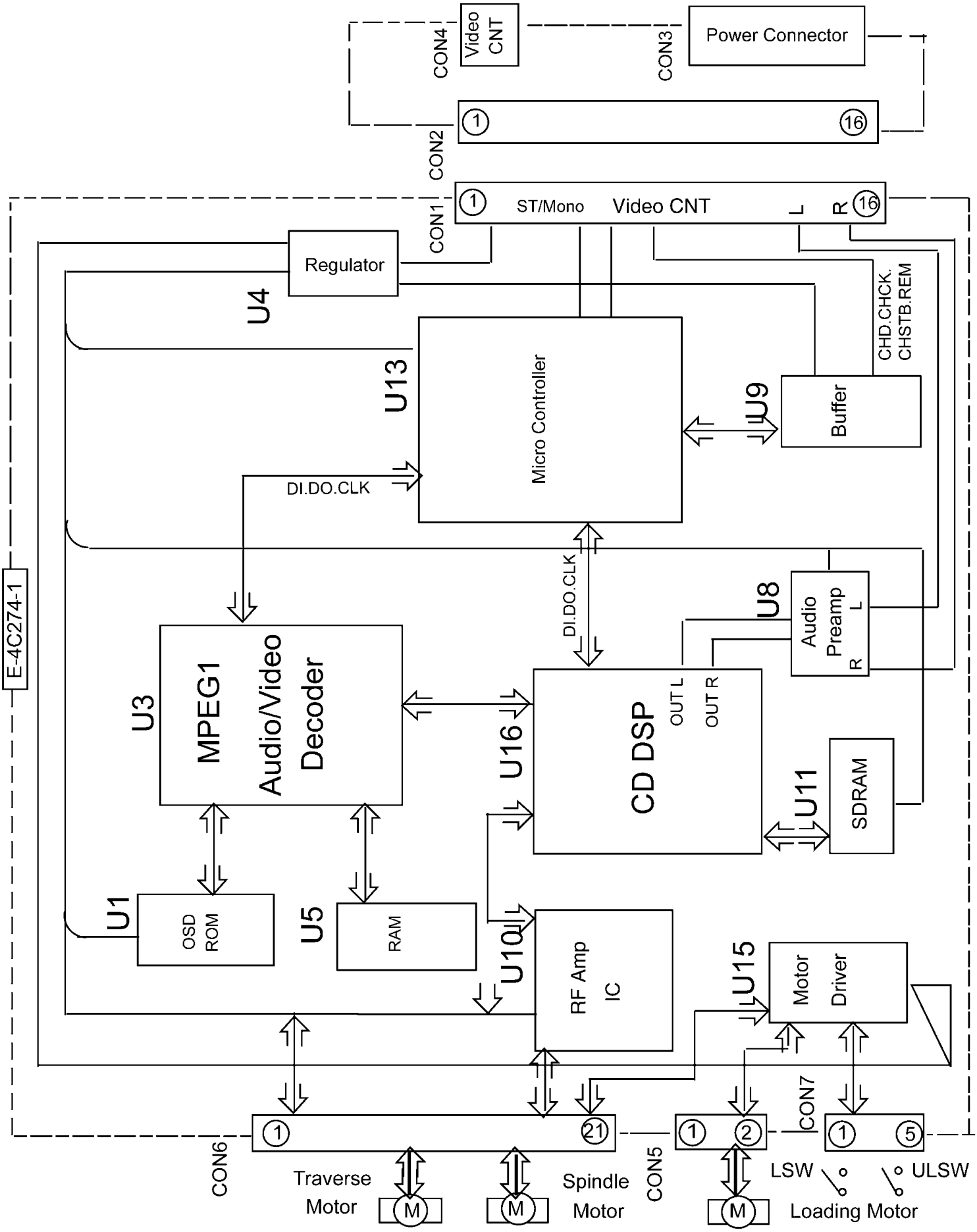

8 TERMINALS DESCRIPTION

8.1. U3 YEAMCL680-D1

Ref. No.	Part No.	Part Name & Description	Remarks	
			I/O	Vol.(V)
1	NC	__	__	__
2	VSS	Ground	I	0V
3	CD_BCK	CD Bit Clock	I	1.7V
4	CD_DATA	CD Data	I	1.7V
5	CD_LRCK	CD Left-Right Clock	I	1.7V
6	CD_C2PO	CD-ROM Data	I	2.0V
7	NC	__	__	__
8	NC	__	__	__
9	NC	__	__	__
10	MD0	Memory Data Bus 0	I/O	0V
11	MD1	Memory Data Bus 1	I/O	0V
12	MD2	Memory Data Bus 2	I/O	0V
13	MD3	Memory Data Bus 3	I/O	0V
14	MD4	Memory Data Bus 4	I/O	0V
15	MD5	Memory Data Bus 5	I/O	0V
16	VSS	Ground	I	0V
17	MD6	Memory Data Bus 6	I/O	0V
18	VDD3	Power (supply voltage)	I	3.3V
19	MD7	Memory Data Bus 7	I/O	0V
20	VSS	Ground	I	0V
21	MD8	Memory Data Bus 8	I/O	0V
22	VDD3	Power (supply voltage)	I	3.3V
23	MD9	Memory Data Bus 9	I/O	0V
24	MD10	Memory Data Bus 10	I/O	0V
25	MD11	Memory Data Bus 11	I/O	0V
26	MD12	Memory Data Bus 12	I/O	0V
27	MD13	Memory Data Bus 13	I/O	0V
28	MD14	Memory Data Bus 14	I/O	0V
29	MD15	Memory Data Bus 15	I/O	0V
30	NC	__	__	__
31	NC	__	__	__
32	NC	__	__	__
33	NC	__	__	__
34	NC	__	__	__
35	NC	__	__	__
36	NC	__	__	__
37	MCE	Chip Enable	O	3.3V
38	MWE	Write Enable	O	3.3V
39	VSS	Ground	I	0V
40	CAS	Column Address Strobe	O	3.3V
41	VDD3	Power (supply voltage)	I	3.3V
42	RAS0	Row Address Strobe 0	O	3.3V
43	RAS1	Row Address Strobe 1	O	3.3V
44	MA10	Memory Address Bus 10	O	0V
45	MA9	Memory Address Bus 9	O	0V
46	MA8	Memory Address Bus 8	O	0V
47	VSS	Ground	I	0V
48	MA7	Memory Address Bus 7	O	0V
49	VDD3	Power (supply voltage)	I	3.3V
50	MA6	Memory Address Bus 6	O	0V
51	MA5	Memory Address Bus 5	O	0V
52	MA4	Memory Address Bus 4	O	0V
53	VSS	Ground	I	0V
54	MA3	Memory Address Bus 3	O	0V
55	VDD3	Power (supply voltage)	I	3.3V
56	MA2	Memory Address Bus 2	O	0V
57	MA1	Memory Address Bus 1	O	0V
58	MA0	Memory Address Bus 0	O	0V
59	PGIO7	Programmable I/O pin7	I/O	3.3V
60	RESET	Hardware Reset	I	3.3V
61	VDDMAX_IN	Max. Input Voltage Control	I	3.3V
62	NC	__	__	__
63	NC	__	__	__
64	NC	__	__	__
65	AGND_DAC	Analog Ground (DAC)	I	0V
66	AVDD_DAC	Analog Power (DAC)	I	3.3V
67	COMPOS_OUT	Composite Output	O	3.0V
68	AGND_DAC	Analog Ground (DAC)	I	0V
69	Y_OUT	Y Output	O	3.3V
70	AVDD_DAC	Analog Ground (DAC)	I	3.3V
71	AGND_DAC	Analog Power (DAC)	I	0V
72	RREF	Reference Resistor	I	1.3V
73	VREF	Voltage Reference	I	3.3V
74	AVDD_DAC	Analog Power (DAC)	I	3.3V
75	C_OUT	C Output	O	1.0V
76	AGND_DAC	Analog Ground (DAC)	I	0V
77	CLK_SEL[0]	Clock Select 0	I	0V
78	CLK_SEL[1]	Clock Select 1	I	0V
79	CLK_SEL[2]	Clock Select 2	I	0V
80	VSS	Ground	I	0V
81	RESERVED	__	__	__
82	VDD3	Power (supply voltage)	I	3.3V
83	RESERVED	__	__	__
84	RESERVED	__	__	__
85	AGND_PLL	Analog Ground (PLL)	I	0V
86	DA_XCK	Audio External Frequency Clock	I	0V
87	AVDD_PLL	Analog Power (PLL)	I	0V
88	PGIO4	Programmable I/O pin4	I/O	3.3V
89	PGIO5	Programmable I/O pin5	I/O	3.3V
90	PGIO6	Programmable I/O pin6	I/O	3.3V
91	PGIO0	Programmable I/O pin0	I/O	3.3V
92	PGIO8	Programmable I/O pin8	I/O	3.3V
93	PGIO2	Programmable I/O pin2	I/O	3.3V
94	AVDD_PLL	Analog Power (PLL)	I	3.3V
95	NC	__	__	__
96	NC	__	__	__
97	NC	__	__	__
98	AGND_PLL	Analog Ground (PLL)	I	0V
99	VSS	Ground	I	0V
100	NC	__	__	__
101	PGIO3	Programmable I/O pin3	I/O	3.3V
102	VDD3	Power (supply voltage)	I	3.3V
103	PGIO1	Programmable I/O pin1	I/O	3.3V
104	VSS	Ground	I	0V
105	GCK	Global Clock	I	1.7V
106	VCK_IN	Video Clock	I	1.7V
107	DA_EMP	Audio Emphasis Flag	O	0V
108	DA_LRCK	Audio Left-Right Clock	O	0V
109	VDDMAX_OUT	Max. Output Voltage Control	I	3.3V
110	DA_DATA	Audio Data Bus	O	0.9V
111	DA_BCK	Audio Bit Clock	O	1.7V
112	HD_OUT	Host Serial Data	O	1.3V
113	HRDY	Host Data Ready	O	3.3V
114	HINT	Host Interrupt	O	3.3V
115	CDG_SCK	CD-G(Subcode) Clock	I/O	2.5V
116	VSS	Ground	I	0V
117	HCK	Host Clock	I	2.5V
118	VDD3	Power (supply voltage)	I	3.3V
119	HD_IN	Host Serial Data	I	2.5V
120	VDD3	Power (supply voltage)	I	3.3V
121	HSEL	Host Address/Data Select	I	0V
122	CDG_SDATA	CD-G(Subcode) Data	I	2.5V
123	CDG_VFSY	CD-G(Subcode) Frame Sync	I	2.5V
124	CDG_S0S1	CD-G(Subcode) Block Sync	I	2.5V
125	NC	__	__	__
126	NC	__	__	__
127	NC	__	__	__
128	NC	__	__	__

8.2. U13 UPD780058557

Ref. No.	Part No.	Part Name & Description	Remarks	
			I/O	Vol.(V)

Ref. No.	Part No.	Part Name & Description	Remarks	
1	NC	NC	O	__
2	NC	NC	O	__
3	NC	NC	O	__
4	AVSS	Ground	I	0V
5	NC	NC	O	__
6	NC	NC	O	__
7	AVREF1	D/A converter reference voltage input	I	3.3V
8	RxD	Program update RxD	I	0V
9	TxD	Program update TxD	O	0V
10	NC	NC	O	__
11	DI	Data Input	I	0V
12	DO	Data Output	O	3.3V
13	CLK	Clock	O	1.7V
14	HSEL	Host Select	O	0V
15	NC	NC	O	__
16	MLD	Micon Commend Load	O	3.3V
17	CHD	Changer Data	O	3.3V
18	CHCK	Changer CLK	O	1.7V
19	CHSTB	Changer STB	O	3.3V
20	LMR	LMR	O	0V
21	LMF	LMF	O	3.3V
22	UDMR	UDMR	O	0V
23	UDMF	UDMF	O	3.3V
24	MMU	MMU	O	0V
25	PBT	PBT	O	3.3V
26	SRE	SRE	O	3.3V
27	DRE	DRE	O	3.3V
28	EQ	EQ	O	0V
29	GC	GC	O	0V
30	MUTE	Audio Mute	O	0V
31	NC	NC	O	__
32	AVC	Audio &Video Control	O	3.3V
33	VSS1	Ground	I	0V
34	ACCS	Acc Sense	I	3.3V
35	NC	NC	O	__
36	NC	NC	O	__
37	NC	NC	O	__
38	NC	NC	O	__
39	NC	NC	O	__
40	SDA	IIC Data In/Out	I/O	3.3V
41	SCL	IIC Clock	O	3.3V
42	NC	NC	O	__
43	NC	NC	O	__
44	NC	NC	O	__
45	NC	NC	O	__
46	NC	NC	O	__
47	NC	NC	O	__
48	J6	DRAMx2/DRAMx1	I	0V
49	J5	CDDA/VCD / VCD/non	I	0V
50	J4	old OSD/new OSD	I	0V
51	J3	Black in stop mode (nonCDC mode)	I	3.3V
52	J2	NTSC/PAL	I	0V
53	J1	Normal/Service	I	3.3V
54	HSW	Hold SW	I	0V
55	LSW	Load SW	I	0V
56	ULSW	Unload SW	I	0V
57	RSW	Reverse SW	I	0V
58	MAG	Magazine Detect	I	0V
59	M/S	Mono/Stereo	I	0V
60	RESET	System reset input	I	0V
61	Remo	Changer Remo	O	3.3V
62	OPT	Disk 1?10 Detect	I	0V
63	HINT	Host Interrupt	I	0V
64	HRDY	Host Ready	I	0V
65	FRM	Sub controller clock	I	0V
66	EJ	Eject	I	0V
67	VSS0	Ground	I	0V
68	VDD1	+3.3V	I	3.3V
69	X2	4.19MHz	I	3.3V
70	X1	4.19MHz	I	3.3V
71	IC(Vpp)	Vpp	I	0V

Ref. No.	Part No.	Part Name & Description	Remarks	
72	XT2	NC	I	__
73	XT1	Subsystem clock	I	3.3V
74	VDD0	+3.3V	I	3.3V
75	AVREF0	D/A converter reference voltage input	I	3.3V
76	NC	NC	O	__
77	NC	NC	O	__
78	NC	NC	O	__
79	NC	NC	O	__
80	NC	NC	O	__

8.3. U16 MNG7911AC1UC

Ref. No.	Part No.	Part Name & Description	Remarks	
			I/O	Vol.(V)
1	DRVDD	DRAM power interface	I	3.3V
2	D0	DRAM data I/O signal 0	I/O	0V
3	D1	DRAM data I/O signal 1	I/O	0V
4	NWE	DRAM program enable signal	O	3.3V
5	NRAS	DRAM RAS Control signal	O	3.3V
6	D2	DRAM data I/O signal 2	I/O	0V
7	D3	DRAM data I/O signal 3	I/O	0V
8	NCAS0	DRAM CAS Control signal 0	O	3.3V
9	NCAS1	DRAM CAS Control signal 1	O	3.3V
10	A8	DRAM Address 8	O	0V
11	A7	DRAM Address 7	O	0V
12	A6	DRAM Address 6	O	0V
13	A5	DRAM Address 5	O	0V
14	A4	DRAM Address 4	O	0V
15	A9	DRAM Address 9	O	0V
16	A0	DRAM Address 0	O	0V
17	A1	DRAM Address 1	O	0V
18	A2	DRAM Address 2	O	0V
19	A3	DRAM Address 3	O	0V
20	DVSS2	Digital GND	I	0V
21	DVDD2	Digital Power	I	3.3V
22	SPOUT	Spindle Motor Drive Output(Absolute Output)	O	0V
23	TRVP	Traverse Drive Output(Plus)	O	0V
24	TRVM	Traverse Drive Output(Minus)	O	0V
25	TRP	Tracking Drive Output(Plus)	O	0V
26	TRM	Tracking Drive Output(Minus)	O	0V
27	FOP	Focus Drive Output(Plus)	O	0V
28	FOM	Focus Drive Output(Minus)	O	0V
29	IOVDD1	IO Power use	I	3.3V
30	TBAL	Tracking Balance Adjust Output	O	0V
31	FBAL	Focus Balance Adjust Output	O	0V
32	FE	Focus Error Signal Input (Analog Input)	I	1.0V
33	TE	Tracking Error Signal Input (Analog Input)	I	2.0V
34	RFENV	RF Envelope Signal Input (Analog Input)	I	1.5V
35	OFT	Off Tracking Signal Input H:Off Tracking	I	1.7V
36	NRFDET	RF Detect Signal Input L:Detect	I	2.0V
37	BDO	Dropout Signal Input H:Dropout	I	2.5V
38	LDON	Laser On Signal Output H:On	O	3.3V
39	ARF	RF Signal Input	I	2.0V
40	IREF	Base Current Input pin	I	3.3V
41	ADPVCC	Power Voltage Monitor Voltage Input (Analog)	I	3.3V
42	DSLF	DSL Loop Filter pin	O	2.3V
43	RFSW	DSL Loop Filter pin	I	2.4V
44	PLLF	PLL Loop Filter pin	O	2.0V
45	PLLFO	PLL Loop Filter pin	O	2.0V
46	AVDD2	Analog Power (DSL,PLL,AD use)	I	3.3V

Ref. No.	Part No.	Part Name & Description	Remarks	
47	AVSS2	Analog Ground (DSL,PLL,AD use)	I	0V
48	OUTL	L Channel Audio Output	O	1.8V
49	AVSS1	Analog Ground (Audio use)	I	0V
50	OUTR	R Channel Audio Output	O	1.8V
51	AVDD1	Analog Power (Audio use)	I	3.3V
52	DVSS3	Digital Ground	I	0V
53	DVDD3	Digital Power	I	3.3V
54	TMOD2	Test Mode Input pin L:Normal	I	0V
55	FLAG	Flag Signal Output	O	0V
56	EXT2	Extension Input/Output port 2	I/O	0V
57	EXT0	Extension Input/Output port 0	I/O	0V
58	EXTI	Extension Input/Output port 1	I/O	0V
59	IOVDD2	IO Power use	I	3.3V
60	TX	Digital Audio interface Output Signal	O	1.6V
61	MCLK	Micom Command Clock Signal Input	I	1.7V
62	MDATA	Micom Command Data Signal Input	I	1.0V
63	MLD	Micom Command Load Signal Input L:load	I	3.3V

Ref. No.	Part No.	Part Name & Description	Remarks	
64	BLKCK	Sub-Controler Block Clock Signal	O	1.7V
65	PWMSEL	PWM Output Mode Select Input	I	0V
66	SMCK	4.2336MHz/8.4672MHz Clock Signal Output	O	3.0V
67	SBCK	Sub-Controler Serial Output Clock Input	I	1.0V
68	STAT	Status Signal Output	O	3.3V
69	NRST	Reset Input L:Reset	I	3.3V
70	SPPOL	Spindle Motor Drive Output(Polarity Output)	O	3.3V
71	PMCK	88.2kHz Clock Signal Output	O	1.7V
72	DQSY	CD Text Data Bug Signal Output	O	1.0V
73	TXTD	CD Text Data Signal Output	O	1.7V
74	TXTCK	CD Text Register External Clock Signal Input	O	2.0V
75	NTEST	Test Mode Input pin H:Normal	I	3.3V
76	X2	Crystal Output pin	O	1.7V
77	X1	Crystal Input pin	I	1.0V
78	DVSS1	Digital Ground	I	0V
79	DVDD1	Digital Power	I	3.3V
80	MON	evaluate Monitor pin	O	3.3V

9 PACKAGE AND IC BLOCK DIAGRAM

U2 YEAMT7WU04FU

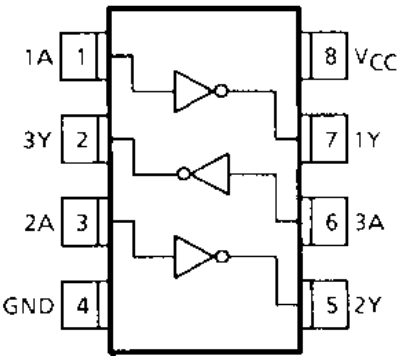

U5 G440L16-40TC

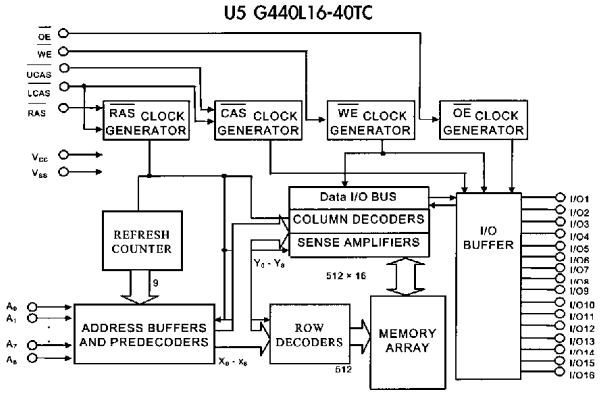

U4 YEAMBA9743FV

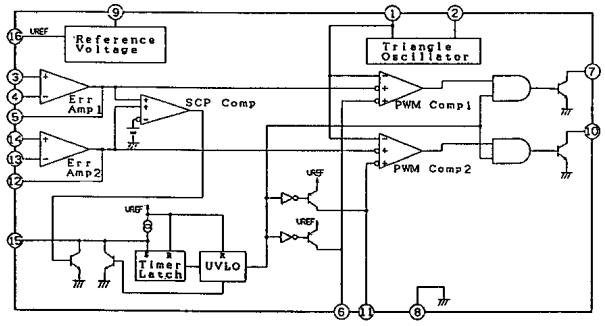

U8 YEAMNJM3414AM

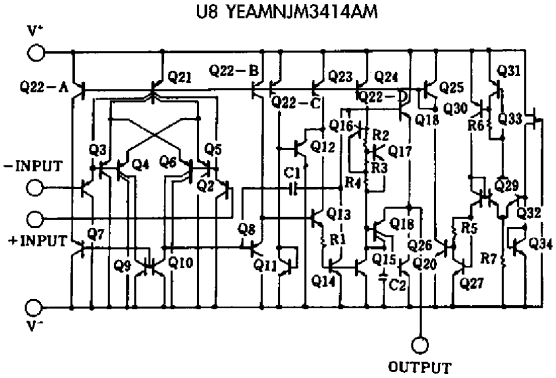

U7 YEAM74HC00FN

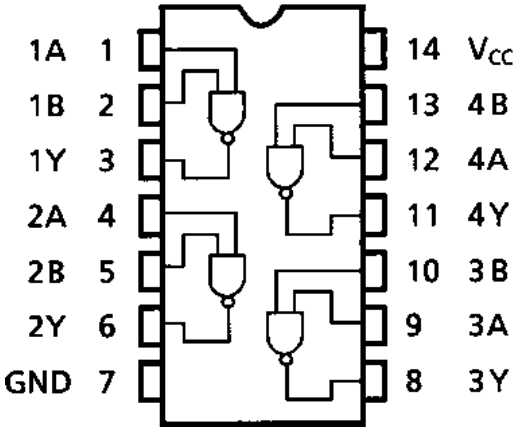

U14 YEAMBD4729G

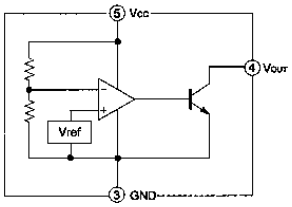

U10 C1BB00000624

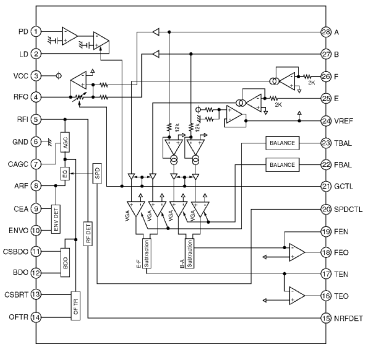

U9 YEAM74HC04FN

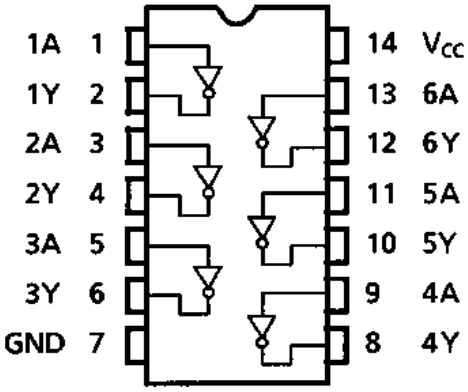

U15 YEAMBD7961FM

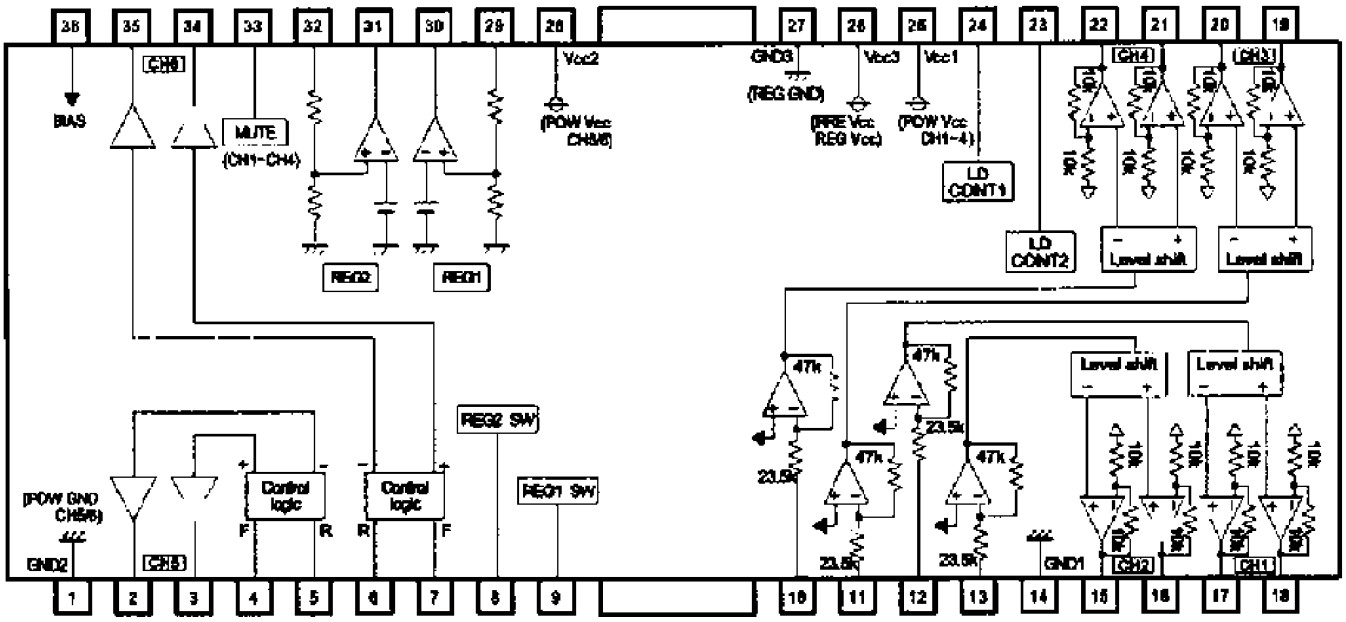

U1 D23C16300714

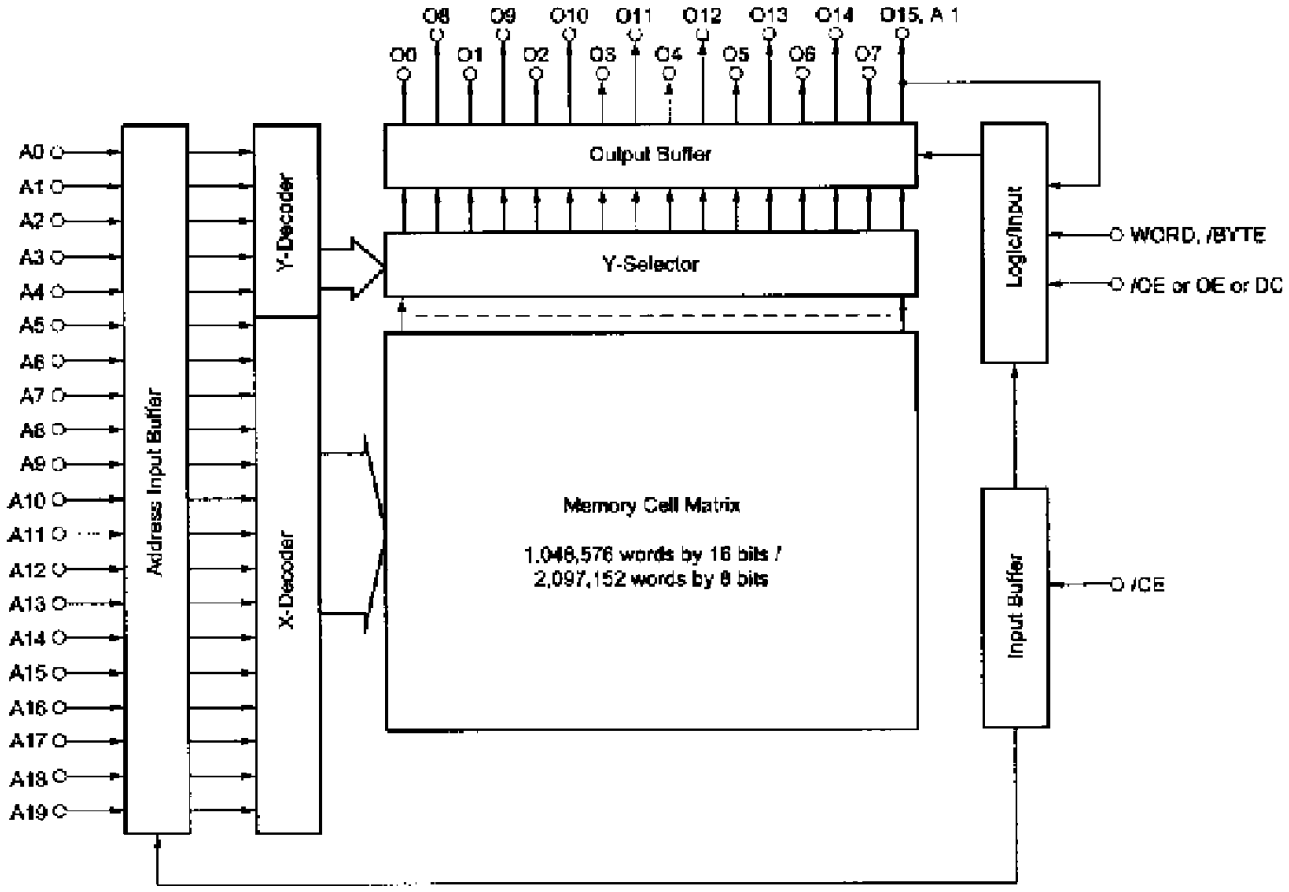

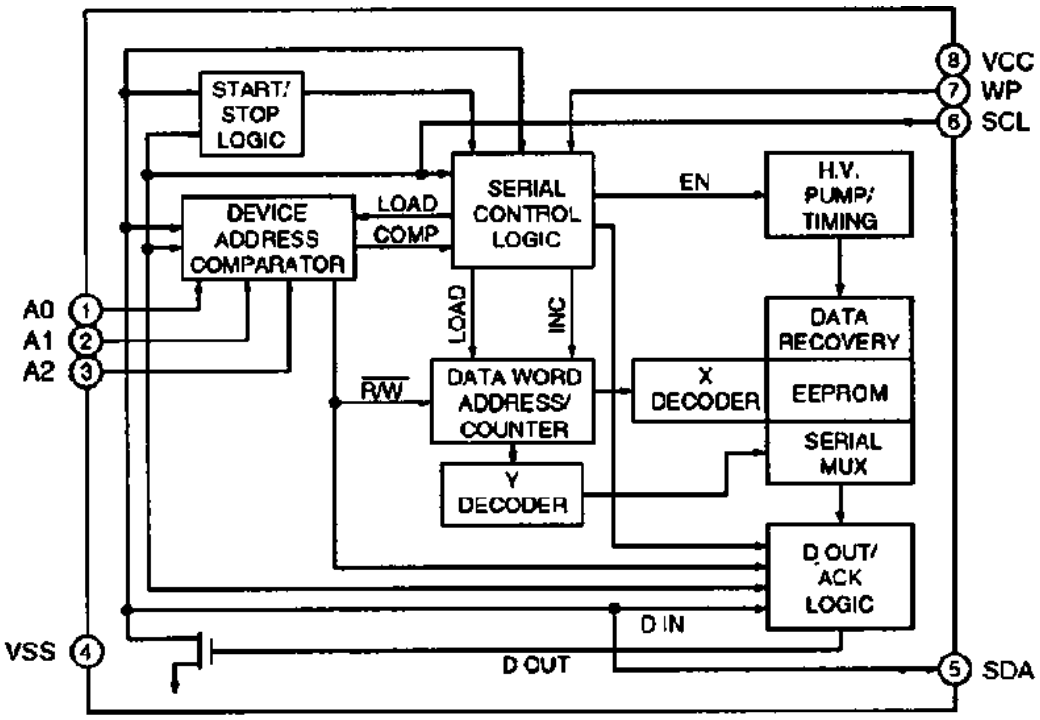

U17 YEAMS24C02A

10 REPLACEMENT PARTS LIST (Unit)

Note:

1. Be sure to make your orders of replacement parts according to this list.
2. Important safty notice: Component, indentified by ⚠ mark have special characteristics important for safety. when replacing any of these components, use only manufacturer's specified parts.
3. Location keys in the remarks column indicates the general location of the parts shown in the exploded drawing. as in a load map.
4. The marking (RTL) indicates that Retention Time is **limited** for this item. After the discontinuation of assembly in production, the item will continue to be availability is dependent on the type of assembly, and in accordance with the laws governing part and product retention. Aft the end of this period, the assembly will no longer be available.
5. "T" marks in remarks colum are indicated supply parts of TAMACO.

- **Order intake period is basically six months after the first shipment**

Ref. No.	Part No.	Part Name & Description	Remarks
1. IC's and Transistors			
MAIN BLOCK [E-4C274]			
Q1	YEAN2N2907	Transistor	T
Q2	YEAN2N2907	Transistor	T
Q3	YEAN2N2907	Transistor	T
Q4	YEAN2SB1561T	Transistor	T
Q5	YEAN2SB1561T	Transistor	T
Q7	YEAN2N2907	Transistor	T
Q8	YEANRK7002	Transistor	T
Q9	YEANRK7002	Transistor	T
Q11	YEANRK7002	Transistor	T
Q12	YEANKRC107M	Transistor	T
Q13	YEANB1243QRT	Transistor	T
U1	D23C16300714	IC	T
U2	YEAMT7WU04FU	IC	T
U3	YEAMCL680-D1	IC	T
U4	YEAMBA9743FV	IC	T
U5	G440L16-40TC	IC	T
U6	NCP1117CT18T3	IC	T
U7	YEAM74HC00FN	IC	T
U8	YEAMNJM3414AM	IC	T
U9	YEAM74HC04FN	IC	T
U10	C1BB00000624	IC	T
U11	YEAMDRAM0001	IC	T
U13	UPD780058557	IC	T
U14	YEAMBD4729G	IC	T
U15	YEAMBD7961FM	IC	T
U16	MNG7911AC1UC	IC	T
U17	YEAMS24C02A	IC	T
2. Diodes			
MAIN BLOCK [E-4C274]			
V2	ERZG07DK220T1	ZNR	T
Z1	YEADUDZS33BT	Diode	T
Z2	YEADUDZS33BT	Diode	T
Z3	YEADUDZS82BT	Diode	T
Z4	YEADUDZS82BT	Diode	T
Z5	YEADUDZ56BT	Zener Diode	T
Z6	YEADUDZ56BT	Zener Diode	T
Z7	YEADUDZ56BT	Zener Diode	T
D1	YEADRB050LT	Diode	T
D2	YEADRB050LT	Diode	T
D3	YEAD1SS355T	Diode	T
D4	YEAD1SS355T	Diode	T
D5	YEAD1SS355T	Diode	T
D6	YEADRB050LT	Diode	T
D7	SPI-235-19	Diode	T
DS1	YEADRB501VT	Diode	T
DS2	YEADRB501VT	Diode	T
3. Capacitors			
MAIN BLOCK [E-4C274]			
C1	ECUV1H270FCV	Ceramic 27PF 50WV	T
C2	ECUV1H270FCV	Ceramic 27PF 50WV	T
C3	ECUV1C105KBN	Ceramic 1MFD 16WV	T
C4	ECUV1C104KBN	Ceramic 0.1MFD 16WV	T
C5	ECUV1C104KBN	Ceramic 0.1MFD 16WV	T
C6	ECUV1C104KBN	Ceramic 0.1MFD 16WV	T
C7	ECUV1C104KBN	Ceramic 0.1MFD 16WV	T
C8	ECUV1C104KBN	Ceramic 0.1MFD 16WV	T
C9	ECUV1C105ZFN	Ceramic 1MFD 16WV	T
C10	ECUV1C104KBN	Ceramic 0.1MFD 16WV	T
C11	ECUV1C104KBN	Ceramic 0.1MFD 16WV	T
C12	ECUV1C104KBN	Ceramic 0.1MFD 16WV	T
C13	ECUV1C104KBN	Ceramic 0.1MFD 16WV	T
C14	ECUV1C104KBN	Ceramic 0.1MFD 16WV	T
C15	ECUV1C104KBN	Ceramic 0.1MFD 16WV	T
C16	ECUV1C104KBN	Ceramic 0.1MFD 16WV	T
C17	ECUV1C104KBN	Ceramic 0.1MFD 16WV	T
C18	ECUV1C104KBN	Ceramic 0.1MFD 16WV	T
C19	ECUV1H102KBN	Ceramic 0.001MFD 50WV	T
C20	ECUV1C104KBN	Ceramic 0.1MFD 16WV	T
C21	ECUV1C104KBN	Ceramic 0.1MFD 16WV	T
C22	ECUV1C104KBN	Ceramic 0.1MFD 16WV	T
C23	ECUV1C104KBN	Ceramic 0.1MFD 16WV	T
C24	ECUV1C104KBN	Ceramic 0.1MFD 16WV	T
C25	ECUV1C104KBN	Ceramic 0.1MFD 16WV	T
C26	ECUV1C104KBN	Ceramic 0.1MFD 16WV	T
C27	ECUV1C105KBN	Ceramic 1MFD 16WV	T
C28	ECUV1C105KBN	Ceramic 1MFD 16WV	T
C29	ECUV1C104KBN	Ceramic 0.1MFD 16WV	T
C30	ECUV1C105KBN	Ceramic 1MFD 16WV	T
C31	ECUV1C105KBN	Ceramic 1MFD 16WV	T
C32	ECUV1C104KBN	Ceramic 0.1MFD 16WV	T
C33	ECUV1C104KBN	Ceramic 0.1MFD 16WV	T
C34	ECUV1C104KBN	Ceramic 0.1MFD 16WV	T
C35	ECUV1C104KBN	Ceramic 0.1MFD 16WV	T
C36	ECUV1C104KBN	Ceramic 0.1MFD 16WV	T
C37	ECUV1C104KBN	Ceramic 0.1MFD 16WV	T
C38	ECUV1C104KBN	Ceramic 0.1MFD 16WV	T
C39	ECUV1C104KBN	Ceramic 0.1MFD 16WV	T
C40	ECUV1C104KBN	Ceramic 0.1MFD 16WV	T
C41	ECUV1C105KBN	Ceramic 1MFD 16WV	T
C42	ECUV1C104KBN	Ceramic 0.1MFD 16WV	T
C43	ECUV1C105KBN	Ceramic 1MFD 16WV	T
C44	ECUV1C104KBN	Ceramic 0.1MFD 16WV	T
C45	ECUV1H101JCN	Ceramic 100PF 50WV	T
C46	ECUV1H101JCN	Ceramic 100PF 50WV	T
C47	ECUV1H101JCN	Ceramic 100PF 50WV	T
C48	ECUV1H101JCN	Ceramic 100PF 50WV	T
C49	YECSW1C106MS	Tantal 10MFD 16WV	T
C50	YECUU1E106ZF	Ceramic 10MFD 25WV	T
C51	YECUU1E106ZF	Ceramic 10MFD 25WV	T
C52	YECUU1E106ZF	Ceramic 10MFD 25WV	T
C54	YECUU1E106ZF	Ceramic 10MFD 25WV	T
C55	YECUU1E106ZF	Ceramic 10MFD 25WV	T
C56	YECUU1E106ZF	Ceramic 10MFD 25WV	T
C57	YECUU1E106ZF	Ceramic 10MFD 25WV	T
C58	ECUV1H102KBN	Ceramic 0.001MFD 50WV	T
C59	ECUV1H102KBN	Ceramic 0.001MFD 50WV	T
C60	ECUV1H102KBN	Ceramic 0.001MFD 50WV	T
C61	ECUV1H102KBN	Ceramic 0.001MFD 50WV	T
C62	ECUV1H102KBN	Ceramic 0.001MFD 50WV	T
C63	ECUV1H102KBN	Ceramic 0.001MFD 50WV	T

Ref. No.	Part No.	Part Name & Description	Remarks
C64	ECUV1H102KBN	Ceramic 0.001MFD 50WV	T
C65	ECUV1C105ZFN	Ceramic 1MFD 16WV	T
C66	ECUV1H102KBN	Ceramic 0.001MFD 50WV	T
C67	ECUV1H102KBN	Ceramic 0.001MFD 50WV	T
C68	YECSW1C106MS	Tantal 10MFD 16WV	T
C69	ECUV1C105KBN	Ceramic 1MFD 16WV	T
C70	ECUV1C105KBN	Ceramic 1MFD 16WV	T
C71	ECUV1C105KBN	Ceramic 1MFD 16WV	T
C72	ECUV1H470JCN	Ceramic 47PF 50WV	T
C73	ECUV1H470JCN	Ceramic 47PF 50WV	T
C74	ECUV1H271KBN	Ceramic 270PF 50WV	T
C75	ECUV1H331KBN	Ceramic 330PF 50WV	T
C76	ECUV1H270JCN	Ceramic 27PF 50WV	T
C77	ECUV1H270JCN	Ceramic 27PF 50WV	T
C78	ECUV1H151KBN	Ceramic 150PF 50WV	T
C79	ECUV1H682KBN	Ceramic 6800PF 50WV	T
C80	ECUV1H222KBN	Ceramic 2200PF 50WV	T
C81	ECUV1H471KBN	Ceramic 470PF 50WV	T
C82	ECUV1H471KBN	Ceramic 470PF 50WV	T
C83	ECUV1H223KBN	Ceramic 0.022MFD 50WV	T
C84	ECUV1H223KBN	Ceramic 0.022MFD 50WV	T
C85	ECUV1H223KBN	Ceramic 0.022MFD 50WV	T
C86	ECUV1H223KBN	Ceramic 0.022MFD 50WV	T
C87	ECUV1H470JCN	Ceramic 47PF 50WV	T
C88	ECUV1H470JCN	Ceramic 47PF 50WV	T
C89	ECUV1H103KBN	Ceramic 0.01MFD 50WV	T
C90	ECUV1H103KBN	Ceramic 0.01MFD 50WV	T
C91	ECUV1H103KBN	Ceramic 0.01MFD 50WV	T
C92	ECUV1H103KBN	Ceramic 0.01MFD 50WV	T
C93	ECUV1C104KBN	Ceramic 0.1MFD 16WV	T
C94	ECUV1H102KBN	Ceramic 0.001MFD 50WV	T
C95	ECUV1H102KBN	Ceramic 0.001MFD 50WV	T
C96	ECUV1H221KBN	Ceramic 220PF 50WV	T
C97	ECUV1H102KBN	Ceramic 0.001MFD 50WV	T
C98	ECUV1C105KBN	Ceramic 1MFD 16WV	T
C99	ECUV1C104KBN	Ceramic 0.1MFD 16WV	T
C100	ECUV1C104KBN	Ceramic 0.1MFD 16WV	T
C101	ECUV1C104KBN	Ceramic 0.1MFD 16WV	T
C102	ECUV1C104KBN	Ceramic 0.1MFD 16WV	T
C103	ECUV1C105KBN	Ceramic 1MFD 16WV	T
T1	YECSW1C106MS	Tantal 10MFD 16WV	T
T3	YECSW1C106MS	Tantal 10MFD 16WV	T
T4	YECSW1C106MS	Tantal 10MFD 16WV	T
E1	ECEA1AKS101IV	Electrolytic 100MFD 10WV	T
E2	ECEA1AKS101IV	Electrolytic 100MFD 10WV	T
E3	ECA1CM471B	Electrolytic 470MFD 16WV	T
E4	ECEA1CKS100IV	Electrolytic 10MFD 16WV	T
E5	ECEA1CKS100IV	Electrolytic 10MFD 16WV	T
E6	ECEA1CKS100IV	Electrolytic 10MFD 16WV	T
E7	ECEA1AKS221IV	Electrolytic 220MFD 10WV	T
E8	ECEA1AKS221IV	Electrolytic 220MFD 10WV	T
E9	ECEA1AKS221IV	Electrolytic 220MFD 10WV	T
E10	ECEA1AKS221IV	Electrolytic 220MFD 10WV	T
E11	ECEA1AKS221IV	Electrolytic 220MFD 10WV	T
E12	ECEA0JKS331IV	Electrolytic 330MFD 6.3WV	T
4. Resistors			
MAIN BLOCK [E-4C274]			
R1	ERJ6GEYJ562V	Chip 5.6k ohms 1/10W	T
R2	ERJ6GEYJ102V	Chip 1k ohms 1/10W	T
R3	ERJ6GEYJ102V	Chip 1k ohms 1/10W	T
R4	ERJ6GEYJ102V	Chip 1k ohms 1/10W	T
R5	ERJ6GEYJ102V	Chip 1k ohms 1/10W	T
R6	ERJ6GEY0R00V	Chip 0 ohms 1/10W	T
R7	ERJ6GEYJ102V	Chip 1k ohms 1/10W	T
R8	ERJ6GEYJ102V	Chip 1k ohms 1/10W	T
R9	ERJ6GEYJ102V	Chip 1k ohms 1/10W	T
R10	ERJ6GEYJ102V	Chip 1k ohms 1/10W	T
R11	ERJ6GEYJ102V	Chip 1k ohms 1/10W	T
R12	ERJ6GEYJ473V	Chip 47k ohms 1/10W	T
R15	ERJ6GEYJ103V	Chip 10k ohms 1/10W	T
R17	ERJ6GEYJ103V	Chip 10k ohms 1/10W	T

Ref. No.	Part No.	Part Name & Description	Remarks
R18	ERJ6GEYJ103V	Chip 10k ohms 1/10W	T
R20	ERJ6GEYJ103V	Chip 10k ohms 1/10W	T
R21	ERJ6GEYJ103V	Chip 10k ohms 1/10W	T
R22	ERJ6GEYJ103V	Chip 10k ohms 1/10W	T
R24	ERJ6GEYJ103V	Chip 10k ohms 1/10W	T
R25	ERJ6GEYJ103V	Chip 10k ohms 1/10W	T
R26	ERJ6GEYJ103V	Chip 10k ohms 1/10W	T
R27	ERJ6GEYJ103V	Chip 10k ohms 1/10W	T
R28	ERJ6GEYJ103V	Chip 10k ohms 1/10W	T
R29	ERJ6GEYJ103V	Chip 10k ohms 1/10W	T
R30	ERJ6GEYJ103V	Chip 10k ohms 1/10W	T
R31	ERJ6ENF1002V	Chip 10k ohms 1/10W	T
R32	ERJ6ENF1002V	Chip 10k ohms 1/10W	T
R33	ERJ6ENF1002V	Chip 10k ohms 1/10W	T
R34	ERJ6ENF1002V	Chip 10k ohms 1/10W	T
R35	ERJ6ENF1002V	Chip 10k ohms 1/10W	T
R36	ERJ6ENF3001V	Chip 3k ohms 1/10W	T
R37	ERJ6ENF5101V	Chip 5.1k ohms 1/10W	T
R38	ERJ6GEYJ201V	Chip 200 ohms 1/10W	T
R39	ERJ6GEYJ201V	Chip 200 ohms 1/10W	T
R40	ERJ6GEYJ390V	Chip 39 ohms 1/10W	T
R41	ERJ6GEYJ390V	Chip 39 ohms 1/10W	T
R42	ERJ6GEYJ201V	Chip 200 ohms 1/10W	T
R43	ERJ6GEYJ201V	Chip 200 ohms 1/10W	T
R44	ERJ6GEYJ102V	Chip 1k ohms 1/10W	T
R45	ERJ6GEYJ201V	Chip 200 ohms 1/10W	T
R46	ERJ6GEYJ201V	Chip 200 ohms 1/10W	T
R47	ERJ6GEYJ201V	Chip 200 ohms 1/10W	T
R49	ERJ6GEYJ180V	Chip 18 ohms 1/10W	T
R50	ERJ6ENF2051V	Chip 2.05k ohms 1/10W	T
R51	ERJ6GEYJ3R3V	Chip 3.3 ohms 1/10W	T
R54	ERJ6GEYJ270V	Chip 27 ohms 1/10W	T
R55	ERJ6GEYJ330V	Chip 33 ohms 1/10W	T
R56	ERJ6GEYJ302V	Chip 3k ohms 1/10W	T
R57	ERJ6GEYJ302V	Chip 3k ohms 1/10W	T
R58	ERJ6GEYJ302V	Chip 3k ohms 1/10W	T
R59	ERJ6GEYJ302V	Chip 3k ohms 1/10W	T
R60	ERJ6GEYJ302V	Chip 3k ohms 1/10W	T
R61	ERJ6GEYJ302V	Chip 3k ohms 1/10W	T
R62	ERJ6ENF2101V	Chip 2.1k ohms 1/10W	T
R63	ERJ6GEYJ750V	Chip 75 ohms 1/10W	T
R64	ERJ6ENF5602V	Chip 56k ohms 1/10W	T
R65	ERJ6ENF5602V	Chip 56k ohms 1/10W	T
R66	ERJ6ENF1503V	Chip 150k ohms 1/10W	T
R67	ERJ6ENF1503V	Chip 150k ohms 1/10W	T
R68	ERJ6GEYJ511V	Chip 510 ohms 1/10W	T
R69	ERJ6GEYJ511V	Chip 510 ohms 1/10W	T
R70	ERJ6GEYJ100V	Chip 10 ohms 1/10W	T
R71	ERJ6GEYJ222V	Chip 2.2k ohms 1/10W	T
R72	ERJ6GEYJ222V	Chip 2.2k ohms 1/10W	T
R73	ERJ6GEYJ222V	Chip 2.2k ohms 1/10W	T
R74	ERJ6GEYJ332V	Chip 3.6k ohms 1/10W	T
R75	ERJ6GEYJ393V	Chip 39k ohms 1/10W	T
R77	ERJ6GEYJ473V	Chip 47k ohms 1/10W	T
R78	ERJ6GEYJ512V	Chip 5.1k ohms 1/10W	T
R79	ERJ6GEYJ512V	Chip 5.1k ohms 1/10W	T
R80	ERJ6GEYJ512V	Chip 5.1k ohms 1/10W	T
R81	ERJ6GEYJ512V	Chip 5.1k ohms 1/10W	T
R82	ERJ6GEYJ512V	Chip 5.1k ohms 1/10W	T
R83	ERJ6GEYJ514V	Chip 510k ohms 1/10W	T
R84	ERJ6GEYJ104V	Chip 100k ohms 1/10W	T
R85	ERJ6GEYJ221V	Chip 220 ohms 1/10W	T
R86	ERJ6GEYJ512V	Chip 5.1k ohms 1/10W	T
R87	ERJ6GEYJ512V	Chip 5.1k ohms 1/10W	T
R88	ERJ6GEYJ512V	Chip 5.1k ohms 1/10W	T
R89	ERJ6GEYJ823V	Chip 82k ohms 1/10W	T
R90	ERJ6GEYJ561V	Chip 560 ohms 1/10W	T
R91	ERJ6GEYJ562V	Chip 5.6k ohms 1/10W	T
R92	ERJ6GEYJ472V	Chip 4.7k ohms 1/10W	T
M1	YER14MNR102J	Chip 1k ohms 1/16W	T
M2	YER14MNR201J	Chip 200 ohms 1/16W	T
M4	YER14MNR102J	Chip 1k ohms 1/16W	T
J2	ERJ6GEY0R00V	Chip 0 ohms 1/10W	T

Ref. No.	Part No.	Part Name & Description	Remarks
J4	ERJ6GEY0R00V	Chip 0 ohms 1/10W	T
J5	ERJ6GEY0R00V	Chip 0 ohms 1/10W	T
J6	ERJ6GEY0R00V	Chip 0 ohms 1/10W	T
5. Connectors			
CON1	YEAE52030-16	Connector (16P)	T
CON2	YEAE52030-16	Connector (16P)	T
CON3	YEAE4CC0N013	Connector	T
CON4	YEAE4C01089A	Connector (4P)	T
CON5	K1KA02B00051	Connector	T
CON6	YEAE52207-21	Connector	T
CON7	YEAE52207-05	Connector	T
6. Electric Parts			
SWITCHES			
S1	EVQPJJ04T	Switch	T
EJ1	SPPB610100	Switch Magazine	T
HSW1	MPU11301MLB4	Home Switch	T
POSISTOR			
PT1	YERT7AR4R7MT	Posistor	T
CRYSTAL			
X1	YEXL4C2700TT	Crystal OSC	T
X3	YEXL4C1693TT	Crystal OSC	T
X4	YEXL4C419TT	Crystal OSC	T
COILS			
F1	YELTBLM21A10	Coil (Chip)	T
F2	YELTBLM21A10	Coil (Chip)	T
F3	YELTBLM21A10	Coil (Chip)	T
F5	YELTBLM21A10	Coil (Chip)	T
F6	YELTBLM21A10	Coil (Chip)	T
F7	YELTBLM21A10	Coil (Chip)	T
F8	YELTBLM21A10	Coil (Chip)	T
F9	YELTBLM21A10	Coil (Chip)	T
F11	YELTBLM21A10	Coil (Chip)	T
F12	YELTBLM21A10	Coil (Chip)	T
F13	YELTBLM21A10	Coil (Chip)	T
F14	YELTBLM21A10	Coil (Chip)	T
F15	YELTBLM21A10	Coil (Chip)	T
F16	YELTBLM21A10	Coil (Chip)	T
F17	YELTBLM21A10	Coil (Chip)	T
L1	YELTH6S330MT	Coil	T
L2	YELTH6S330MT	Coil	T
L3	YELT03N2R7JT	Coil	T
L4	YELT03N1R8JT	Coil	T
L5	YELT03N2R7JT	Coil	T
L6	YELT03N100JT	Coil	T
L7	YETQ024C008V	Choke Coil	T
7. Accessories			
PRINTING			
	YFM284C416ZA	Instruction Book	T
INSTALLATION PARTS			
	YEAJ071314	Power Connector	T
	WYZZU450T	Wire	T
	ZZBISVCH1000	Screw Kit	T
	YFG014C920ZB	Bracket	T
	YFG014CA58ZA	Bracke (R)	T
	YFG014CA59ZA	Bracke (L)	T
	YFX9994C725ZA	Tape	T
8. Mechanical Parts			
MISCELLANEOUS			
F1	EE0007	FUSE 3A	T
1	YFA034C731ZA	Upper Cover	T(4-C)
2	YJT034C729YA	Screw (M3X5)	T(4-C)
3	YEFD134C001	Deck (CD CHANGER)	T(3-C)

Ref. No.	Part No.	Part Name & Description	Remarks
4	YFE134CB93ZA	Button (EJECT)	T(3-B)
5	YEAEFFC038A	Connector (16P)	T(3-C)
6	YEAEFFC039A	Connector (21P)	T(2-C)
7	YEAEFFC037A	Connector (5P)	T(2-C)
8	YFX214C876ZA	Bracket	T(2-B)
9	YFS014C807ZA	Gum	T(2-B)
10	YFV014C085ZA	Sheet	T(2-B)
11	YFK064C701ZA	Cord Clamp	T(2-B)
12	YFX054C720ZA	Spring Plate	T(2-A)
13	YFX214C875ZA	Bracket	T(2-A)
14	YFS044C702ZA	Damper	T(2A) (1-C)
15	YJT034C728ZA	Screw (M2.6X5)	T(2-B)
16	YFV014C761ZA	Sheet	T(2-B)
17	YFX994C733ZB	Hook	T(1-A)
18	YFX054C725ZA	Spring Plate	T(1-B)
19	YFC024C651ZA	Center Door	T(1-A)
20	YFX014C079ZA	Badge Panel	T(1-A)
21	YFC024C650ZA	Slide Door	T(1-A)
22	YFC024C649ZA	Escutcheon	T(1-A)
23	YFA054C724ZB	Bottom Cover	T(1-B)
24	YEAE1411501B	Video Control	T(2-A)
25	YEFD034C001	Magazine	T(1-B)
26	YFS014C822ZA	Sponge	T(2-B)
27	YFC024C641ZA	ESC ASSY	T(1-A)/RTL
28	AAPB274A0	Main PCB Assy	T(3-C)/RTL

11 EXPLODED VIEW (Unit)

■ Numbers in ○ are indicated REF.No.in the REPLACEMENT PARTS LIST

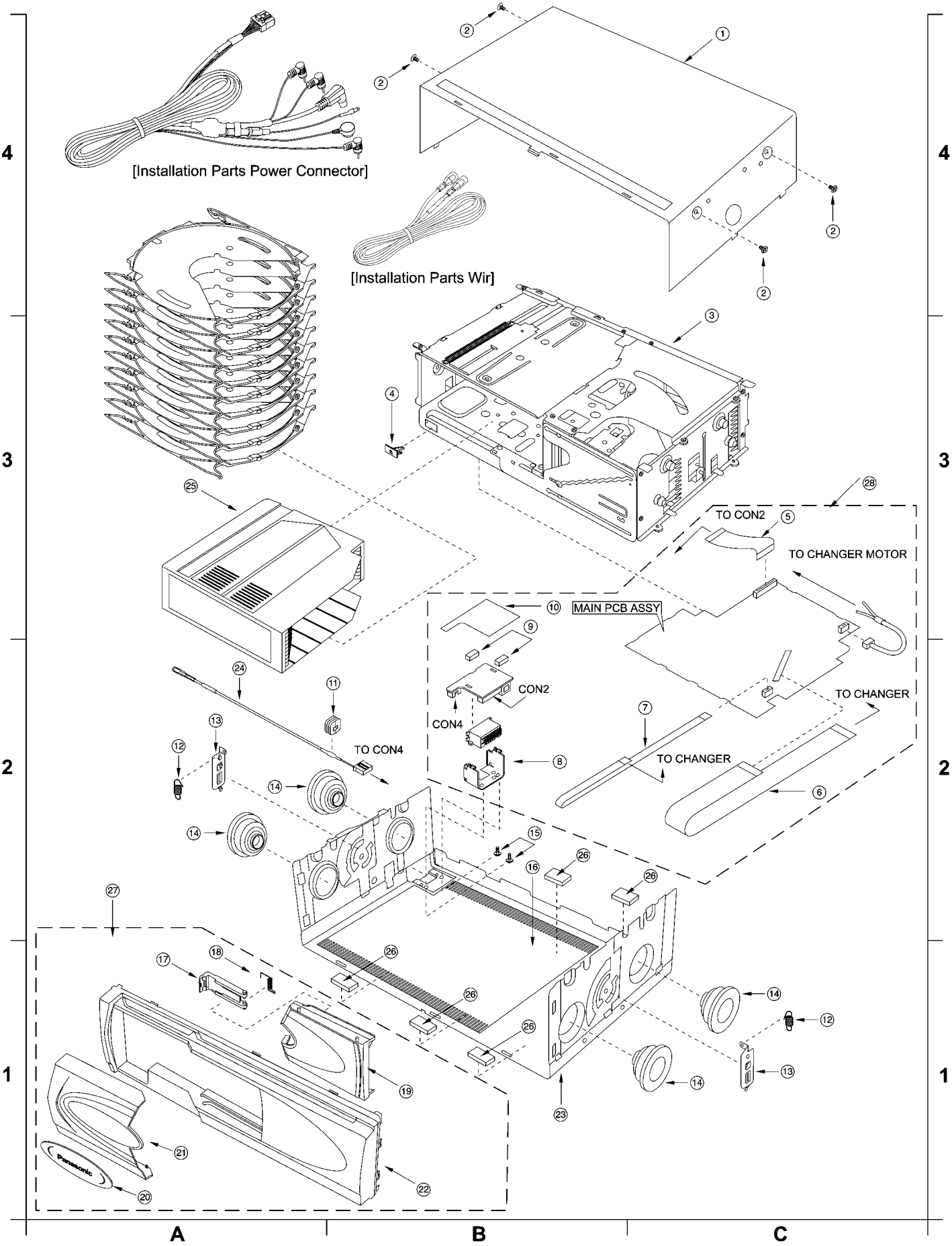

12 REPLACEMENT PARTS LIST (VCD Changer Parts)

Note:

1. Be sure to make your orders of replacement parts according to this list.
2. Important safty notice: Component , indentified by ⚠ mark have special characteristics important for safety. when replacing any of these components, use only manufacturer's specified parts.
3. Location keys in the remarks column indicates the general location of the parts shown in the exploded drawing. as in a load map.
4. The marking (RTL) indicates that Retention Time is **limited** for this item. After the discontinuation of assembly in production, the item will continue to be availability is dependent on the type of assembly, and in accordance with the laws governing part and product retention. Aft the end of this period, the assembly will no longer be available.
5. "T" marks in remarks colum are indicated supply parts of TAMACO.

- **Order intake period is basically six months after the first shipment**

Ref. No.	Part No.	Part Name & Description	Remarks
MISCELLANEOUS			
1	3008 01 504	Main Chassis Ass'y	T(2-B)
2	3008 01 502	Side Plate Ass'y	T(4-A)
3			
4	3008 02 502	EL Plate A Ass'y	T(1-B)
5	3008 03 501	Main Frame Ass'y	T(1-D)
6	3008 04 501	SUB Frame Ass'y	T(3-B)
7	3008 05 501	P Chassis Ass'y	T(4-C)
8	3008 06 304	Magazine Ass'y	T(3-E)
9			
10			
11			
12	3008 02 301	EL Motor Ass'y	T(3-C)
13	3008 03 303	SW PWB Ass'y	T(3-D)
14	3008 03 302	L Motor Ass'y	T(2-E)
15			
16			
17	3008 04 301	Clamp Plate Ass'y	T(4-B)
18	3008 05 301	Turn Table Ass'y	T(3-C)
19	3008 05 302	21P PWB Ass'y	T(3-D)
20	3008 05 303	Feed Motor Ass'y	T(4-D)
21	3008 04 502	Hook Lever P Ass'Y	T(3-A)
22			
23	3031 05 304	Feed Screw (M) Ass'y	T(4-D)
24			
25			
26	3008 02 27	EL Gear B	T(2-C)
27	3008 02 28	EL Gear C	T(2-D)
28	3008 02 04	EL Gear D	T(2-C)
			T(2-D)
29	3008 02 06	EL Plate B	T(4-B)
30			
31	3008 02 11	MLA Spring	T(2-C)
32	3008 02 10	ML Arm	T(2-C)
33			
34	3008 02 12	ER PLATE	T(1-B)
35			
36			
37	3008 03 07	Motor Bracket L	T(2-E)
38	3008 03 28	Tray Gear	T(4-B)
39	3008 03 31	Main Gear	T(3-D)
40	3008 03 10	Loading Gear	T(3-E)
41	3008 03 33	Lift Gear	T(3-D)
42	3008 03 13	Tray Guide A	T(1-E)
43	3008 03 14	Tray Guide B	T(1-E)
44	3008 03 30	Chucking Arm	T(1-E)
45	3008 03 16	Lift Plate A	T(3-E)
46	3008 03 17	Lift Plate B	T(2-C)
47	3008 03 18	Lift Spring	T(2-C)
			T(3-E)
48	3008 03 27	Clutch Spring	T(4-B)
49	3008 03 29	Lock Plate C	T(2-E)
50	3008 03 15	Trig Plate Spring	T(3-E)
51	3008 04 12	Turn Over Spring	T(3-A)
52	3008 04 06	Hook Lever M	T(3-B)
53	3008 04 11	Tray Arm	T(3-A)
54			
55			
56	3008 05 02	P Base A	T(4-C)
57	3008 05 03	P Base B	T(3-C)
58			
59	3008 02 20	Eject Lever	T(1-A)
60	3008 01 21	Top Cover(S)	T(1-B)
61	3008 02 29	E Spring (10)	T(1-A)
62	3030 05 10	PU Gear (B)	T(4-D)
63	3031 05 30	Nut Push SPR Plate (M)	T(3-D)
64	3031 05 28	FD GR BLK (M)	T(4-D)
65	3031 05 29	PU M Nut (M)	T(3-D)
66	3031 05 42	Thrust SPR	T(4-D)
67	3031 05 32	PU Shaft (M)	T(3-D)
68			
69	6904 16 03	Pick Up RD-DAP005-TN	T(4-D)
70			
71	3008 01 13	Hold Plate	T(1-C)
72	3008 03 34	Plate D	T(3-E)
73	6502 01 01	Rotary Damper	T(2-C)
74	3008 02 18	Gear Sheet	T(2-C)
75	3008 03 19	Lock Plate A	T(2-D)
76	3008 03 20	Lock Plate B	T(2-D)
77	3008 03 21	Lock SP Plate A	T(2-D)
78	3008 03 22	Lock SP Plate B	T(2-D)
79			
80			
81	9C01 17 223	Camera Screw 1.7x2.2	T(4-C)
82	9C43 20 351	Camera B Tapping 2x3.5	T(3-E)
83	9C04 20 253	Camera B Tapping 2x2.5	T(4-A)
84	9C06 20 353	Camera B Tapping 2x3.5	T(2-E)
			T(3-A)
85	9C06 20 503	Camera B Tapping 2x5	T(4-C)
86	9C20 20 301	TS. SG2x3	T(1-A)
87	9C39 20 051	TS.S Tams 2x15	T(3-D)
88	9C44 20 503	Camera Tapping 2x5	T(4-D)
89	9C45 17 503	Camera Tapping 1.7x5	T(3-D)
90			
91	9P02 20 031	Tams Screw 2x3	T(4-D)
92			
93	9C20 20 401	TS.SG2x4	T(2-C)
94			
95	9E01 00 231	E Ring S2.3	T(2-C)
			T(2-D)
96			
97	9W02 50 060	P Washer Cut 1.55x5x0.5	T(3-A)
98			
99			
100	3008 07 04	Damper	T(4-A)

13 EXPLODED VIEW (VCD CHANGER)

■ Number in ○ are indicate REF.No.in the REPLACEMENT PARTS LIST

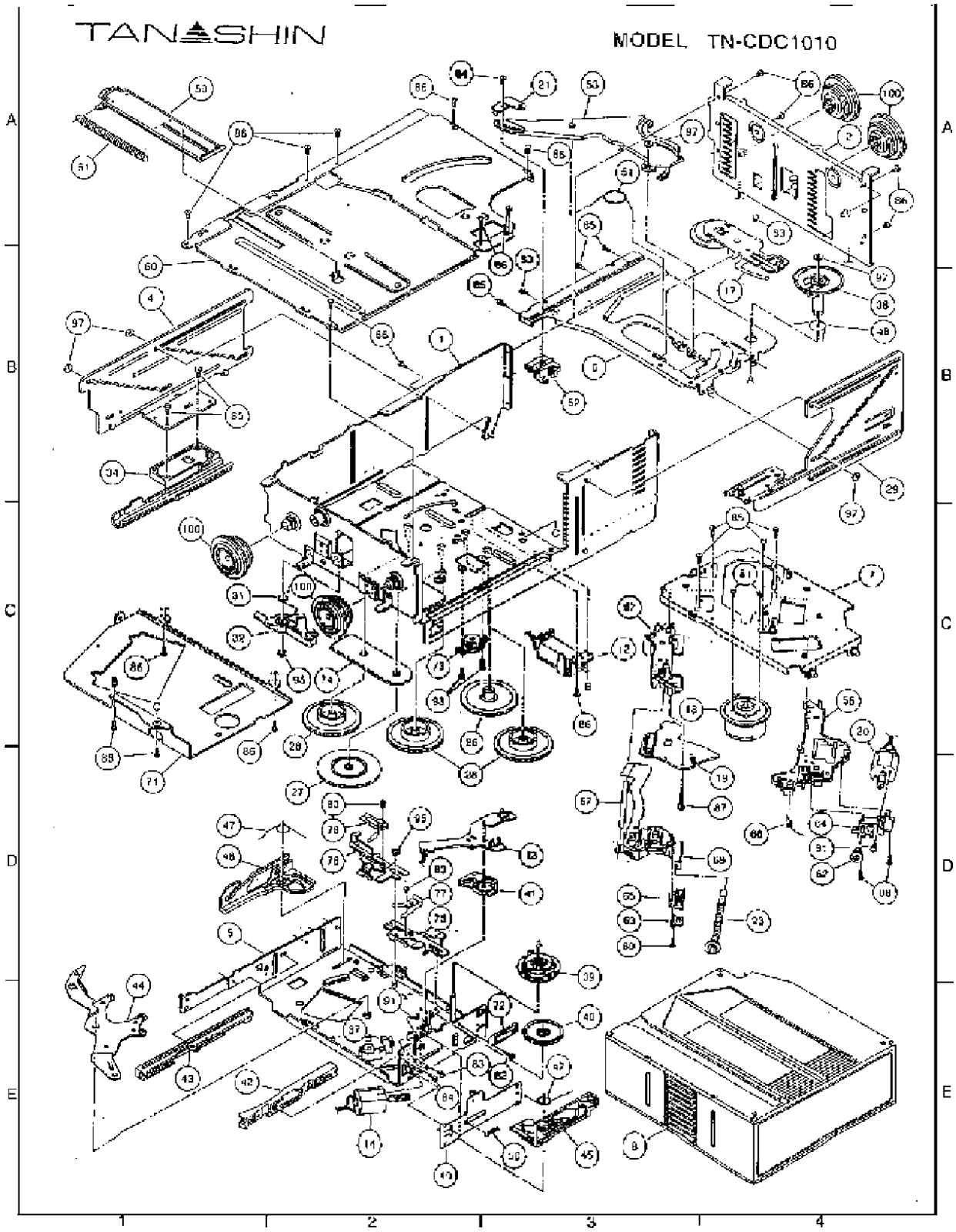

14 WIRING DIAGRAM

14.1. Main Block-1

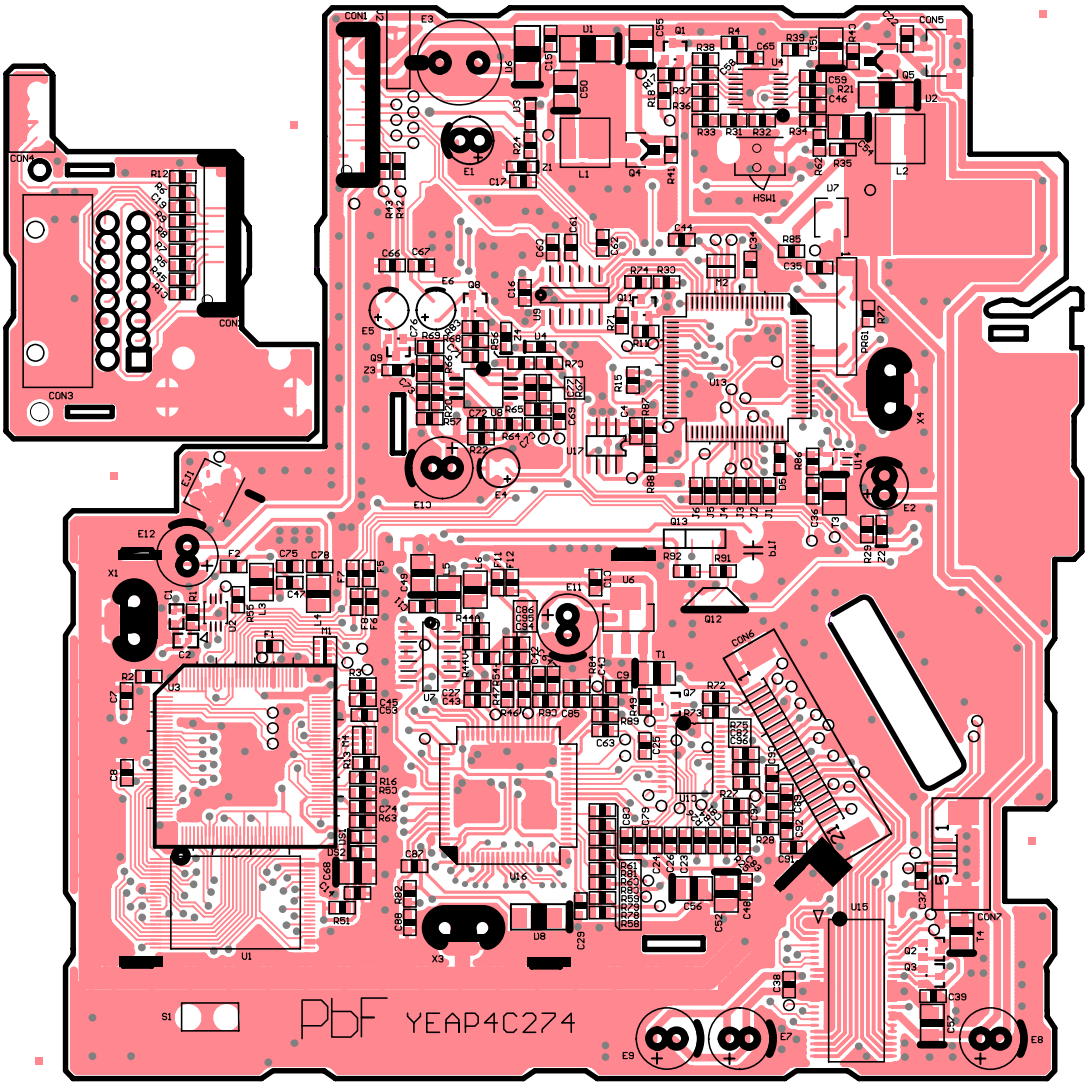

[E-4C274][Top View]

CX-VCH1000H MAIN PCB

14.2. Main Block-2

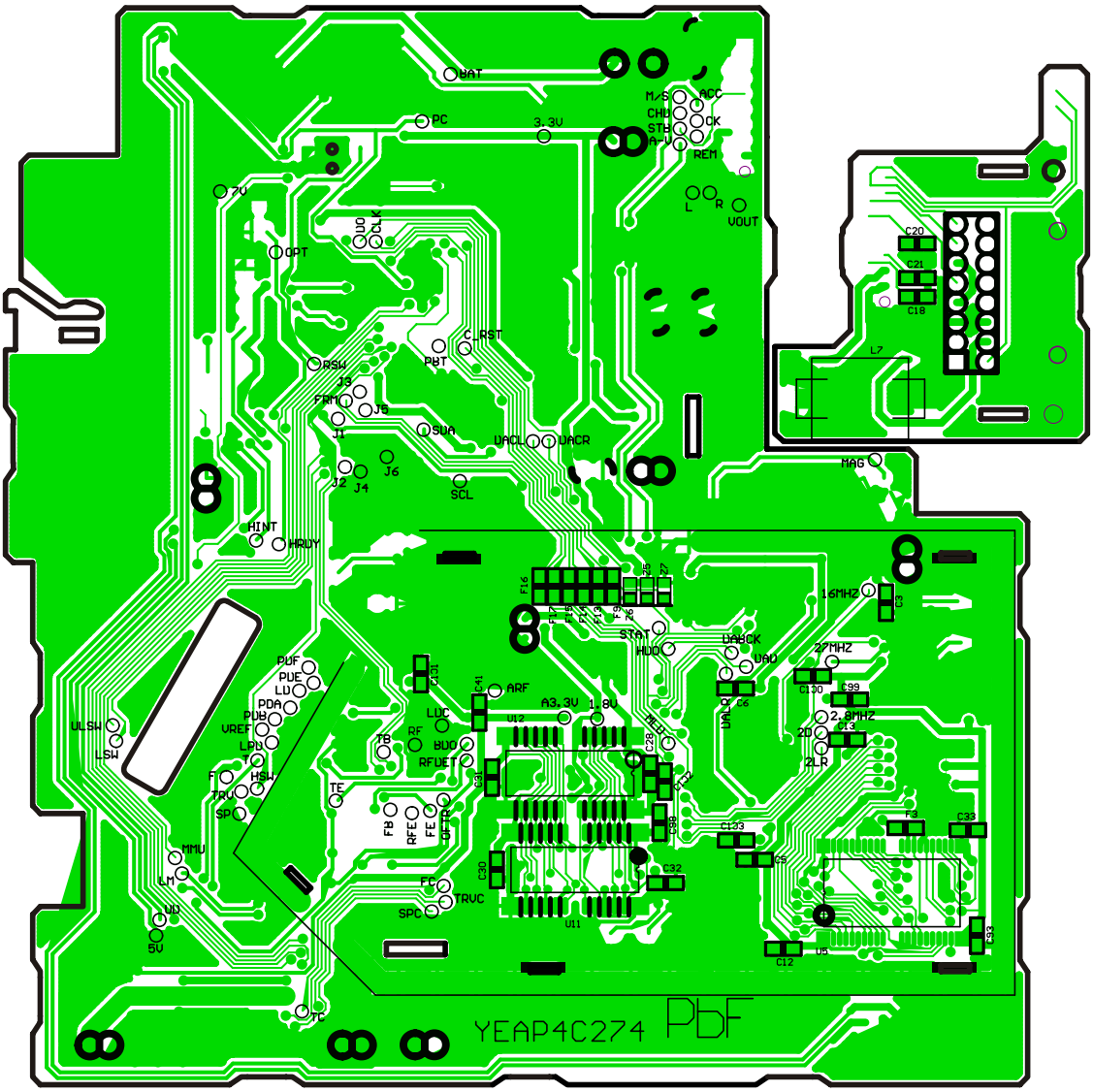

[E-4C274][Bottom View] CX-VCH1000H MAIN PCB

15 SCHEMATIC DIAGRAM (Main Block)

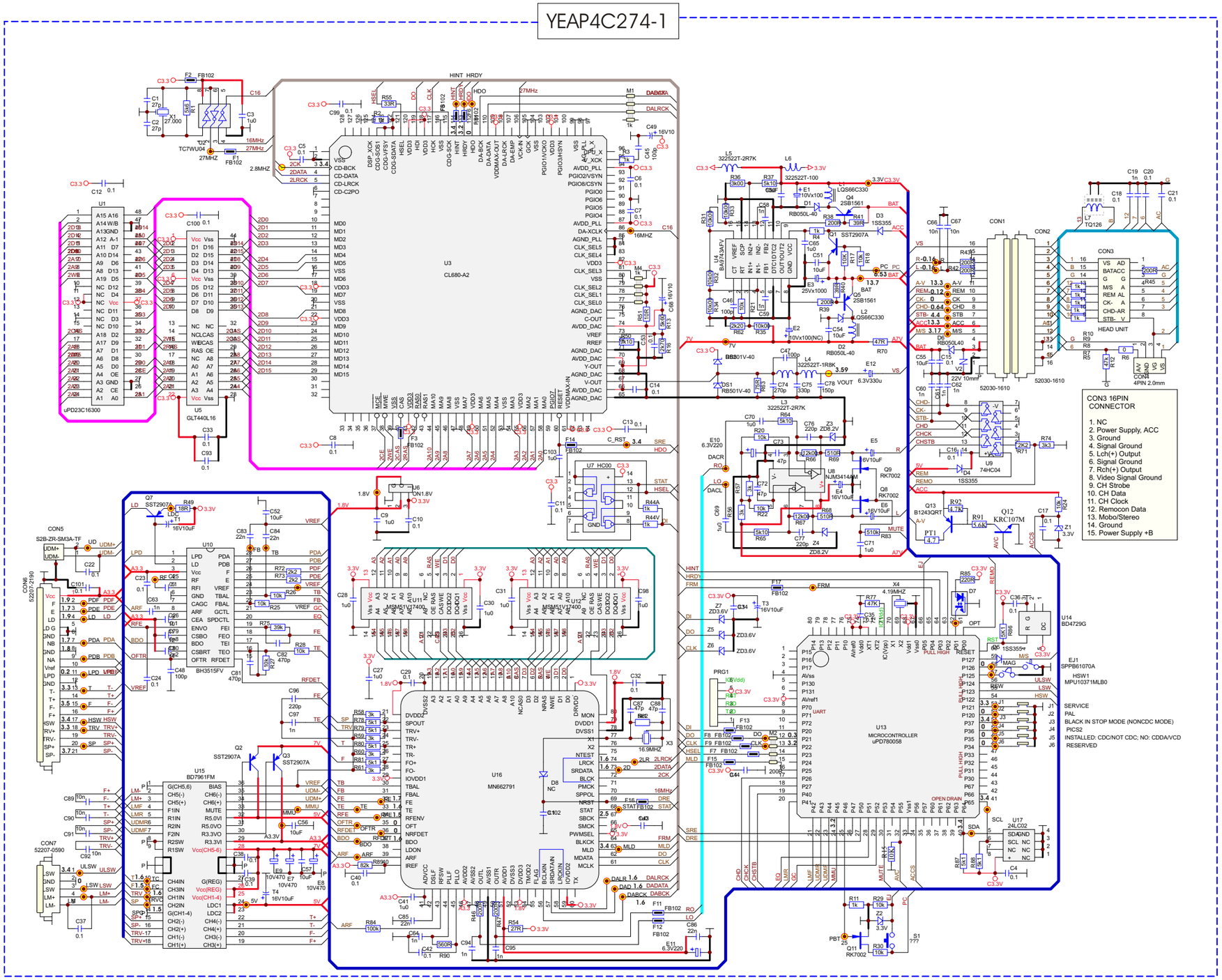

16 SCHEMATIC DIAGRAM for printing with letter size

16.1. Main Block (Left Side)

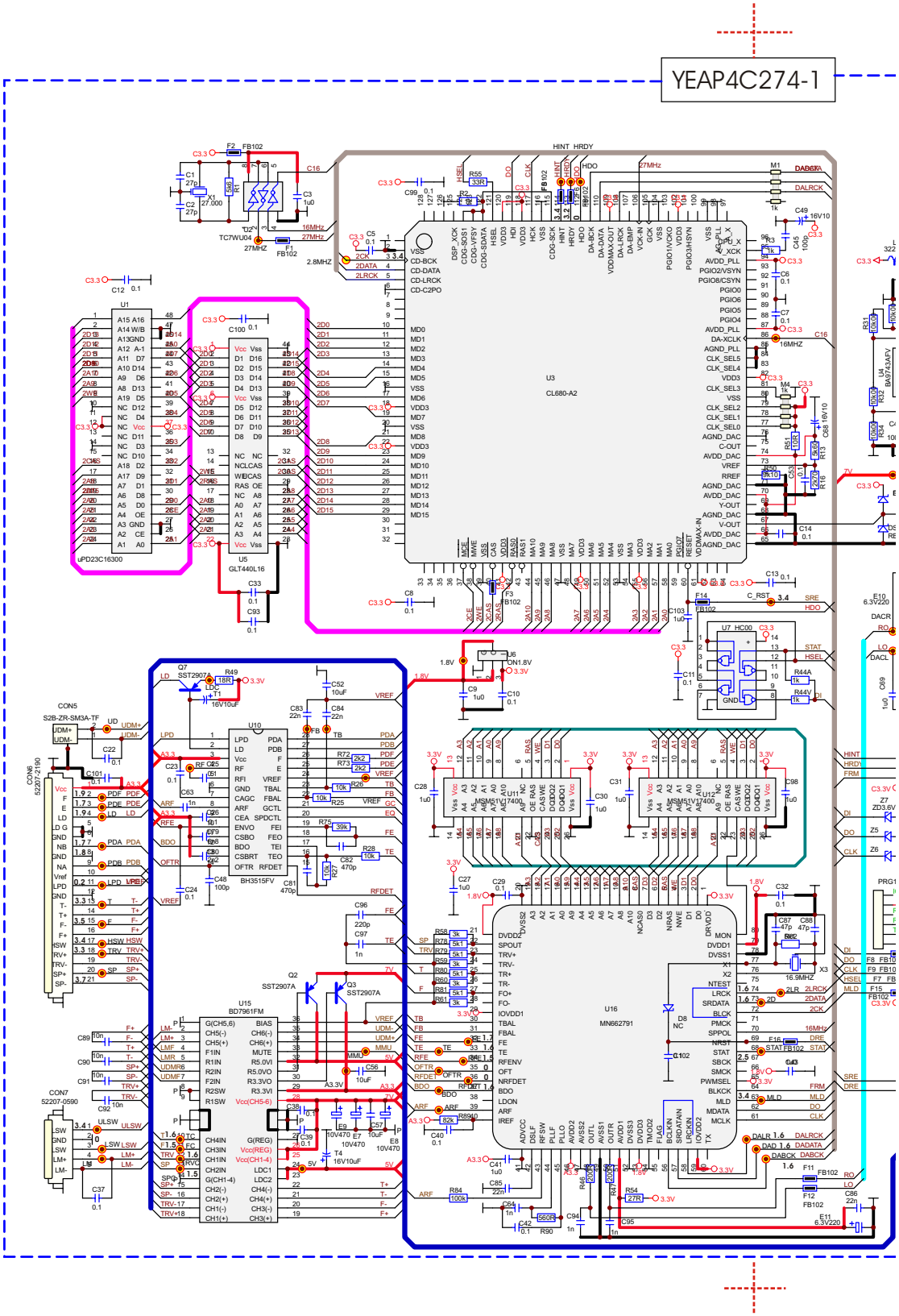

16.2. Main Block (Right Side)

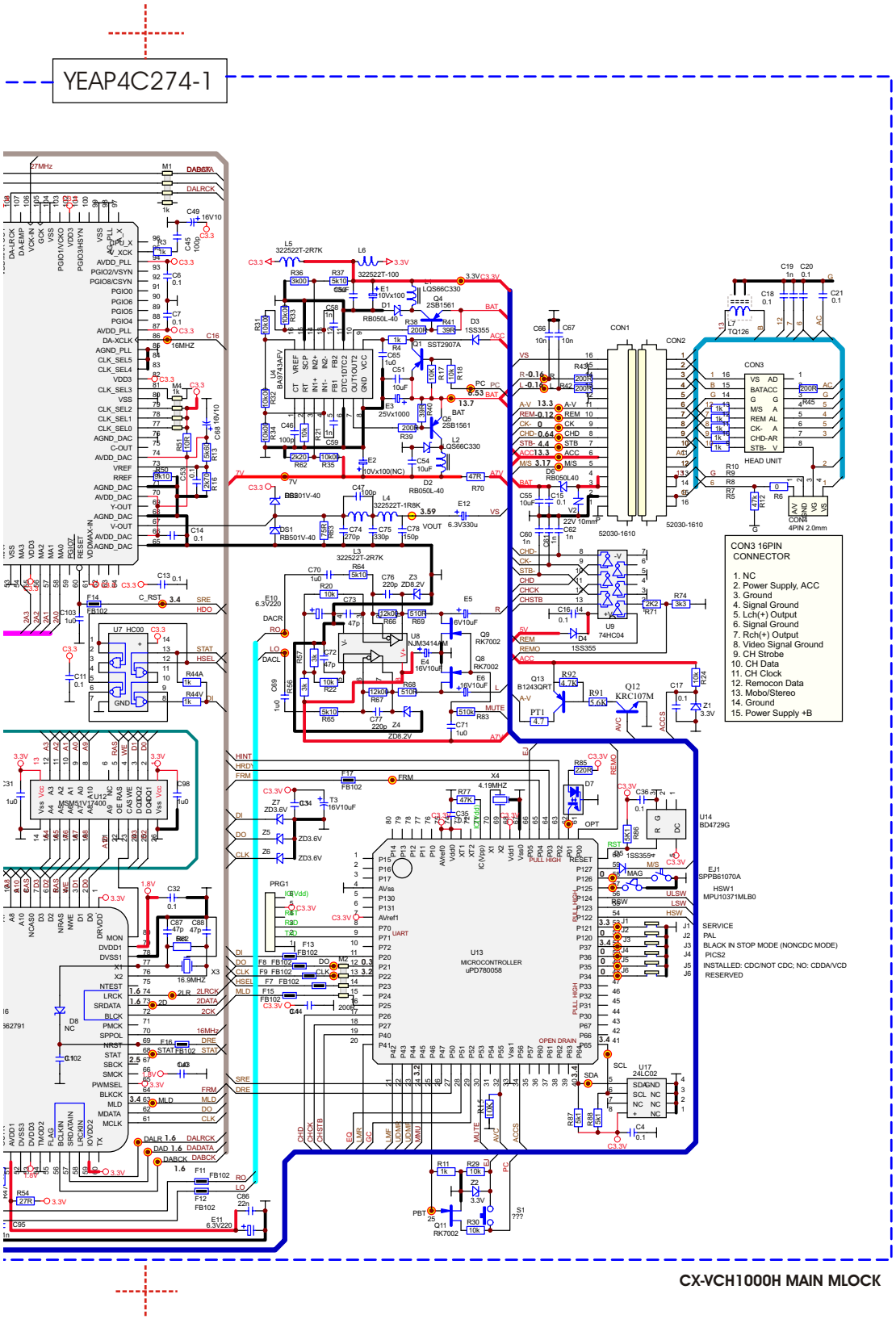

Printed in Taiwan
2003.01

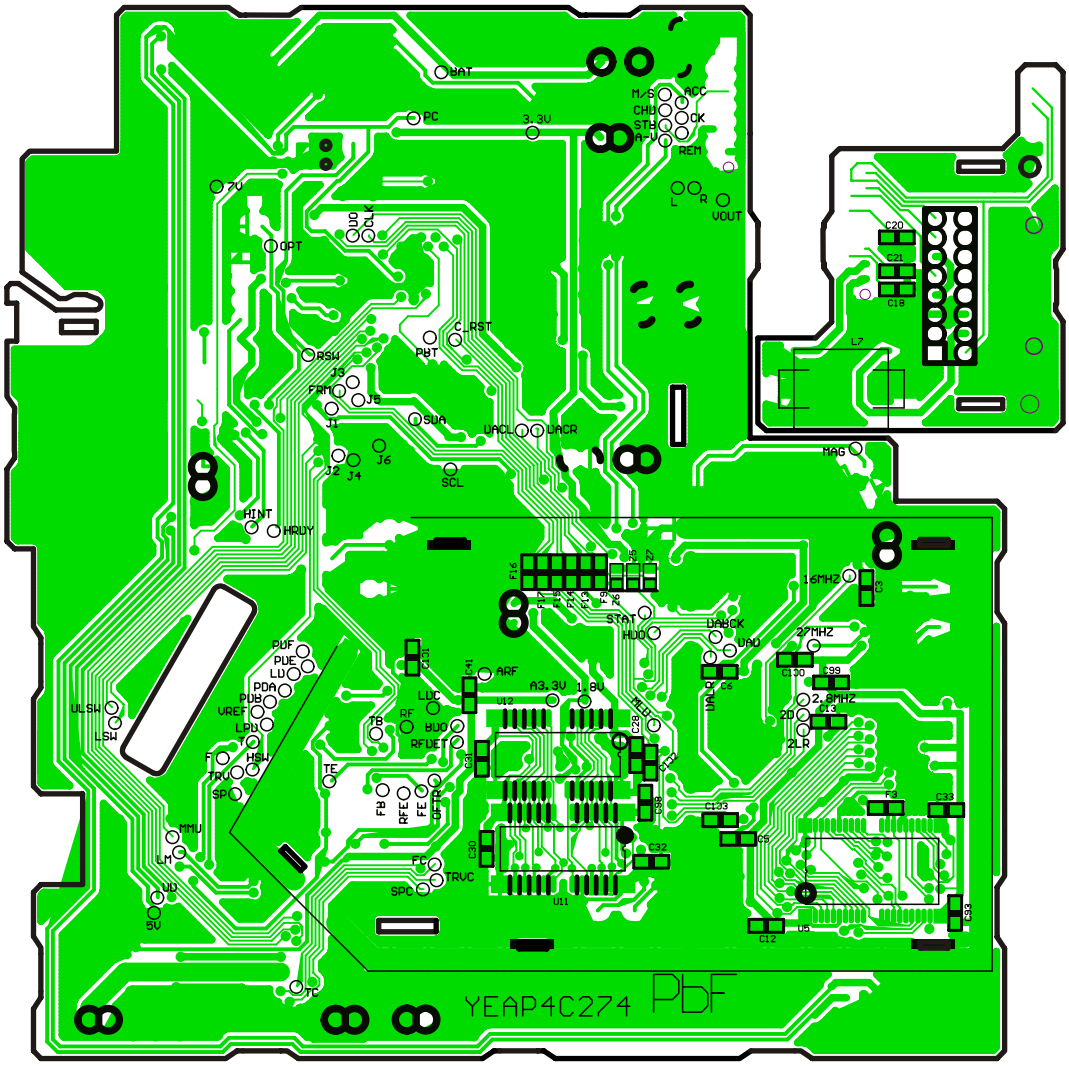

[E-4C274][Bottom View]

CX-VCH1000H MAIN PCB

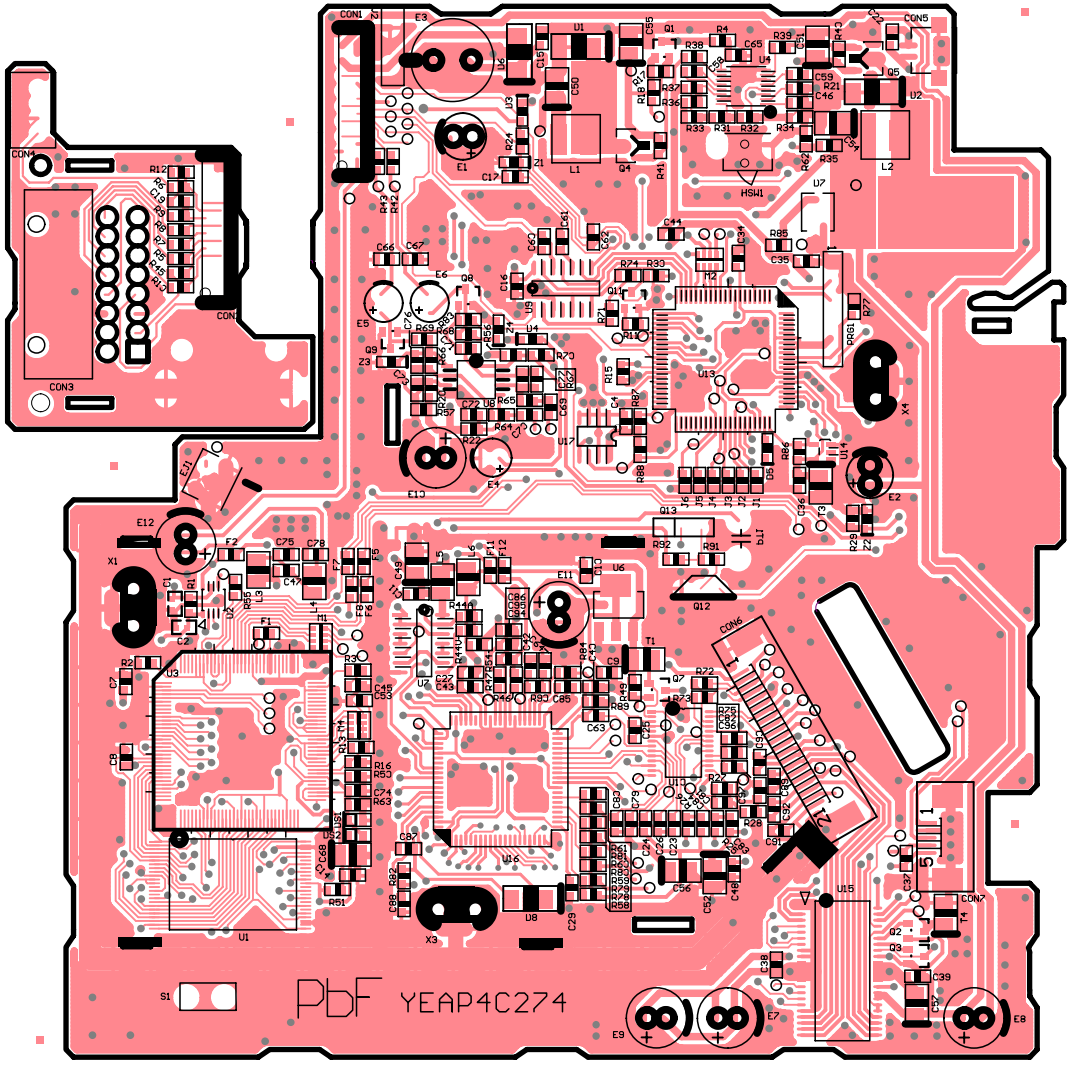

[E-4C274][Top View]

CX-VCH1000H MAIN PCB