MITSUBISHI

SERVICE MANUAL

4-CH HIGH POWER AMPLIFIER

MODEL : CV-251

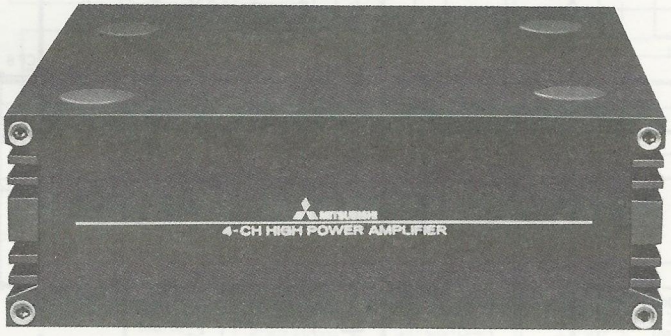

SPECIFICATIONS

- BTL 4 channel circuit
- Power output (per channel)
  - Max (input 500mV) 25W
  - At THD 10% 18W
  - At THD 1% 13W
- Frequency Respone (–3 dB) 25~25000 Hz
- Channel separation 70dB
- S/N Radio (at 1KHz, 1W) 70dB
- Load Impedance 4 ohms
- Power consumption (output 1Wx4) 2.0A
- Dimensions 46(H)x140(W)x153(D) mm
  1-7/8''(H)x5-1/2''(W)x6-1/8''(D)
- Weight 1.5 kg
  3.3lbs
- Power Requirement 14.4 V

FEATURES

- Total 100 watts maximum power (25 wattsx4) at 4 ohms.
- Balanced transformer less (BTL) circuitry.
- Efficient heat dispersion with aluminum die-cast chassis.
- Compact design (1-7/8x5-1/2x6-1/8'').

MITSUBISHI ELECTRIC AUSTRALIA PTY. LTD.

73-75 EPPING ROAD NORTH RYDE N.S.W. 2113 SYDNEY AUSTRALIA

EXPLODED VIEW

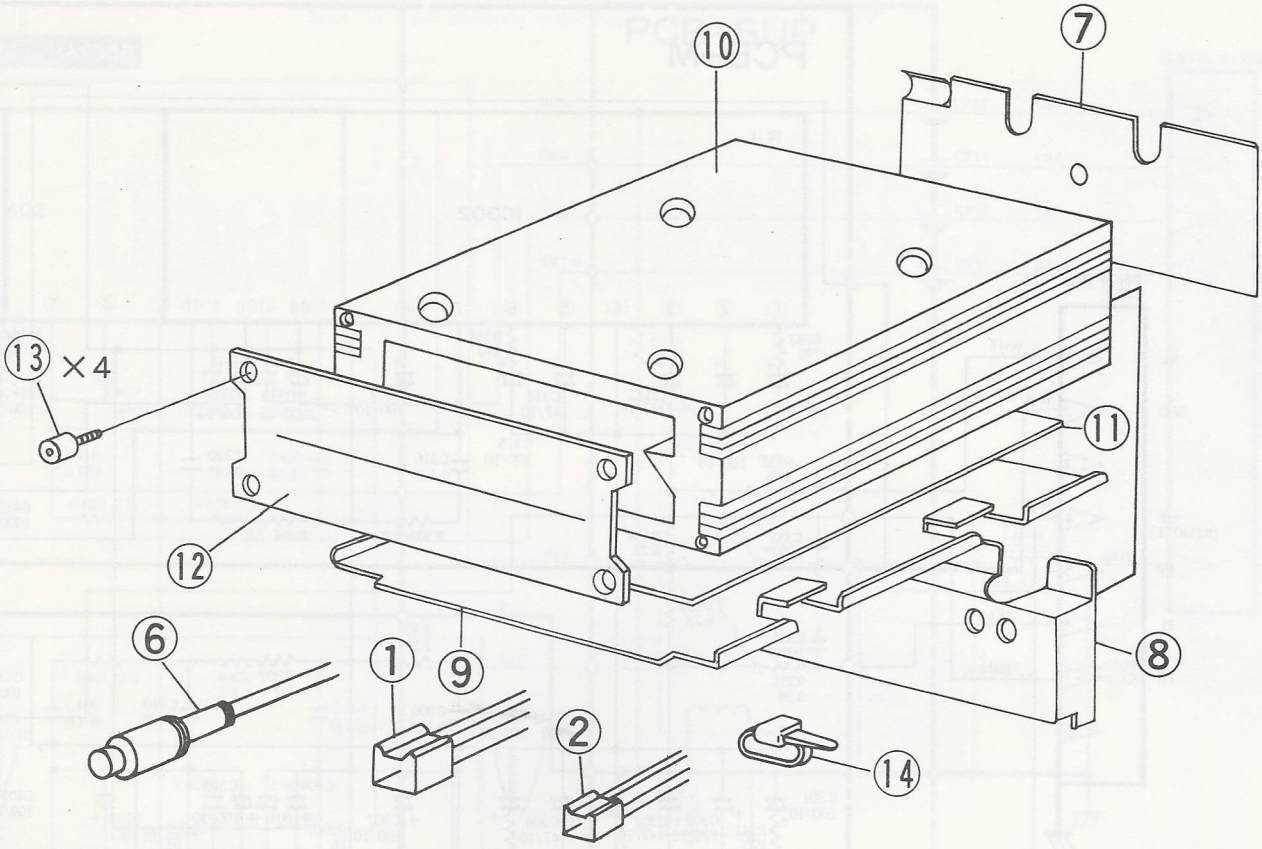

ELECTRICAL PARTS LIST

Ref. No.	Part No.	Description	
		CAPACITOR	
CP3~6 8~12	141 P02001	C-CERAMIC	1000P
		SEMICONDUCTORS	
D309	264 P08801	DIODE	V-06C
D312	264 P13201	"	GM-3Z
IC301,302, 401,402	266 P35201	IC	HA1388
		TRANSFORMER	
L301	351 L02001	TRANS-CHOKE	1.6mH

MECHANICAL PARTS LIST

Ref. No.	Part No.	Description
1	242 L14802	LEAD-6CM (J302)
2	242 L14904	LEAD-4CM (J303)
3		
4		
5	287 L02701	RELAY (SW1)
6	450 L05001	DIN-CABLE-8P (J301)
7	590 L77901	REAR-COVER
8	590 L79001	SHIELD-CASE
9	590 L79102	COVER
10	630K00302	HEAT-SINK
11	642M08405	SPACER
12	711 L01402	FRONT-PLATE
13	669 L02603	BOLT
14	838M00201	LEAD-CLAMPER

SCHEMATIC DIAGRAM

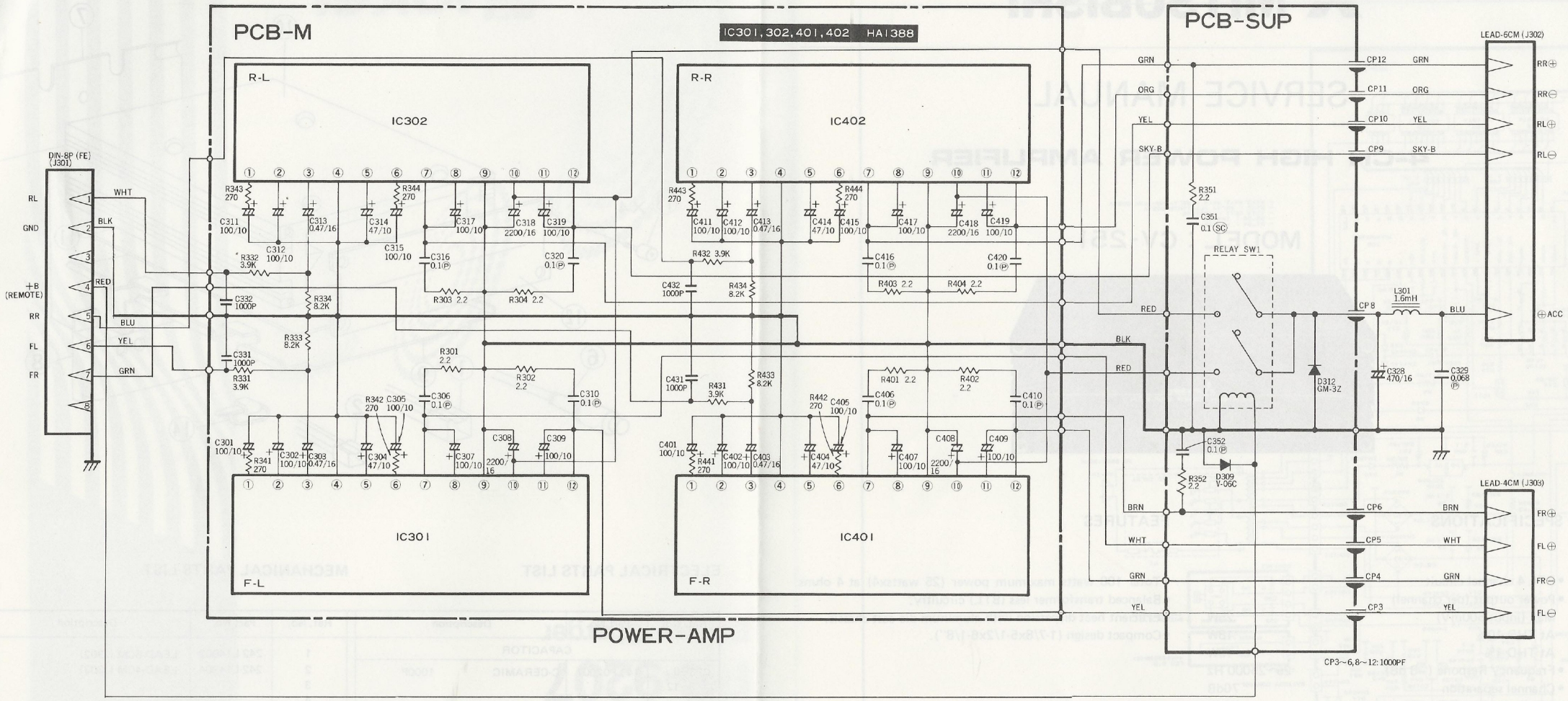

NOTICE:

1. **Indication**
   - All resistors are ohms unless otherwise specified. (K = 10^3 ohm, M = 10^6 ohm).
   - All capacitors are microfarads unless otherwise specified. (P = 10^{-6} microfarad)

2. **Resistors**
   - Types: Carbon resistor: No mark
     Solid resistor: (S) mark
     Printed resistor: (~) mark
     Tip resistor: [~] mark
   - Wattage: 1/4W. Other wattage will be indicated.
   - Tolerance

Mark	Tolerance
J	±5%
K	±10%

3. **Capacitors**
   - Types: Ceramic condenser: No mark
     Semiconductor ceramic condenser: (BC) mark
     Polyester film condenser: (P) mark
     Styrol condenser: (S) mark
     Tantalic condenser: (T) mark
     Aluminum electrolytic condenser: (Al) mark
     Tip condenser: [II] mark
   - Tolerance

Mark	Tolerance	Mark	Tolerance
C	±0.25PF	M	±20%
D	±0.5PF	Z	+80% −20%
J	±5%	No mark	+100% −0
K	±10%		

4. **Voltage**
   Voltage measured by D.C. voltage (20 KΩ/V DC) to chassis ground with no signal input (Source voltage 14.4V).

5. This circuit is subject to change for improvement without prior notice.
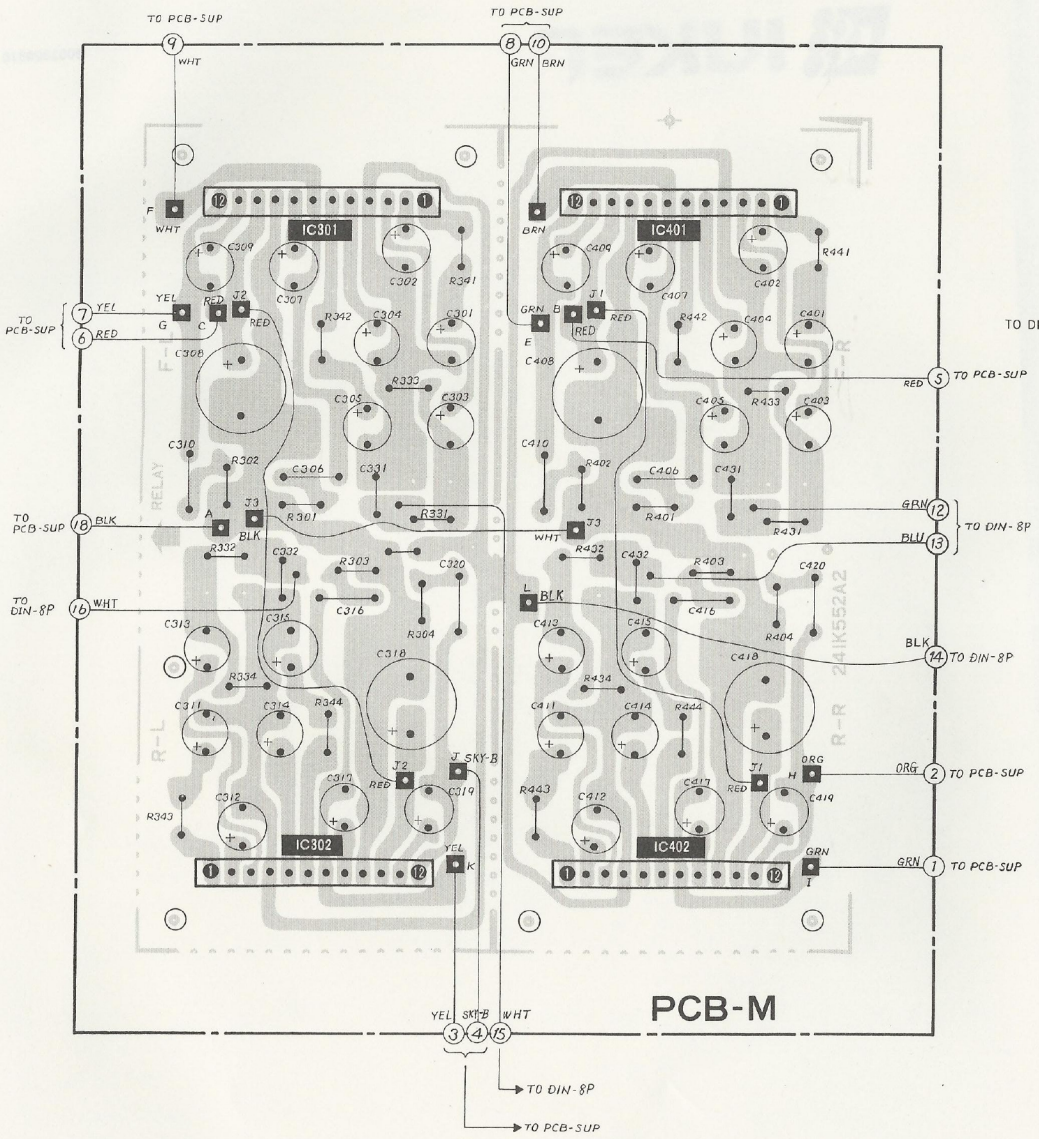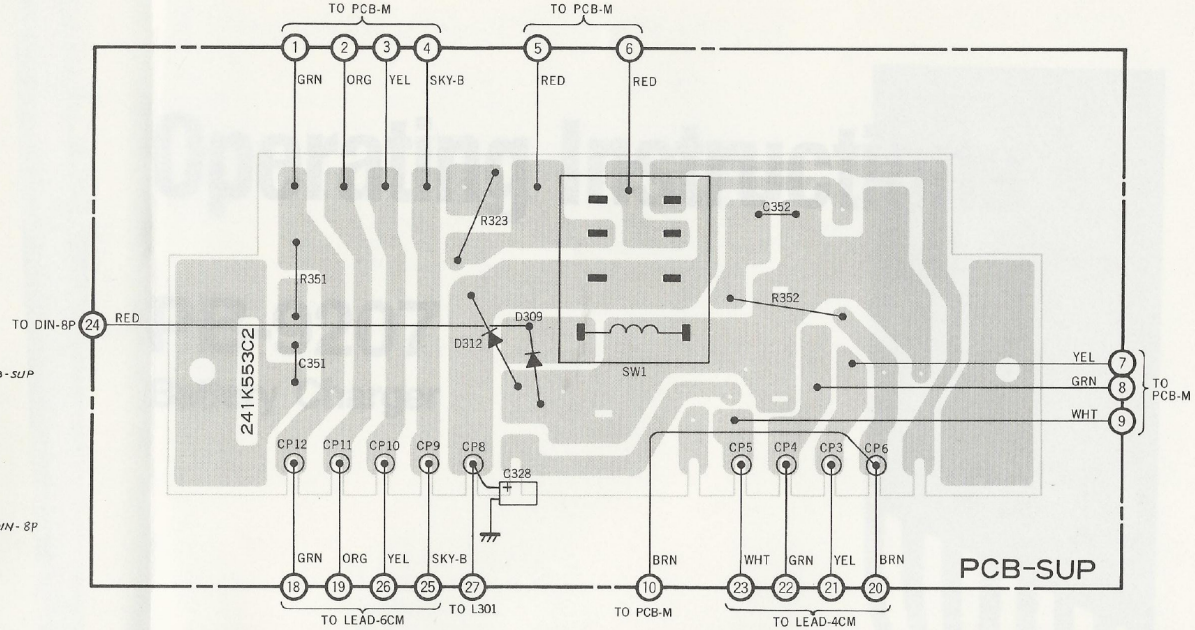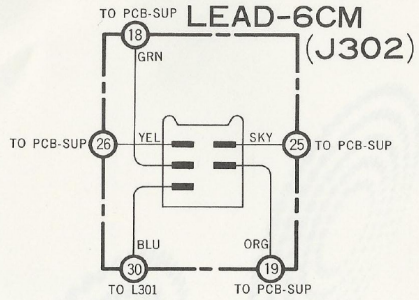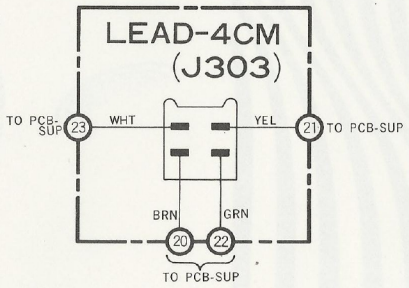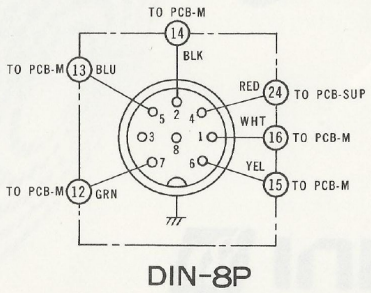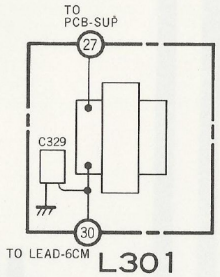
PRINTED CIRCUIT BOARD (Pattern Side)