Service
Service
Service

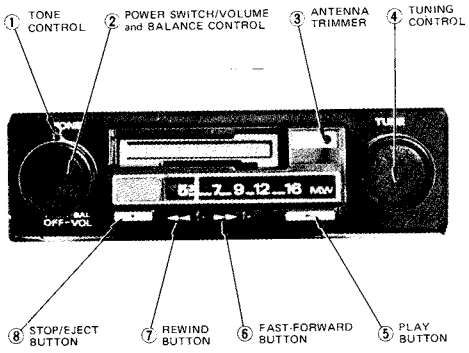

Service Manual

12 V ⊖

SPECIFICATIONS

GENERAL SECTION

Semiconductors	4IC, 6 Transistor, 4 Diode
Power Supply	DC +14.4V (Negative ground)
Power Consumption	250mA (at no signal)
Power Output (Total)	14W (max) 10W (THD 10%)
Speaker	4~8Ω

RADIO SECTION

Circuit System	Superheterodyne
Tuning Range	530~1605kHz
Intermediate Frequency	455 kHz
Sensitivity	15 dB(max.), 28 dB(pra.)

TAPE DECK SECTION

Tape	Cassette tape
Tape Speed	4.75cm/sec.
Track System	4 Track 2 Channel 2 Program
Frequency Response	50~10,000Hz
Signal to Noise Ratio	40 dB or more
Cross Talk	45 dB or more
Wow and Flutter	0.35% WRMS
Motor	DC Motor (Mechanical Governor Control)

WARNING

CONNECT POWER LEAD OF RECEIVER TO POSITIVE BATTERY TERMINAL ONLY. RECEIVER WILL BE DAMAGED IF CONNECTED TO INCORRECT POLARITY.

AUGUST, 1977.

Subject to modification
3102 305 32170
Printed in Australia

PHILIPS

INTERNAL VIEW

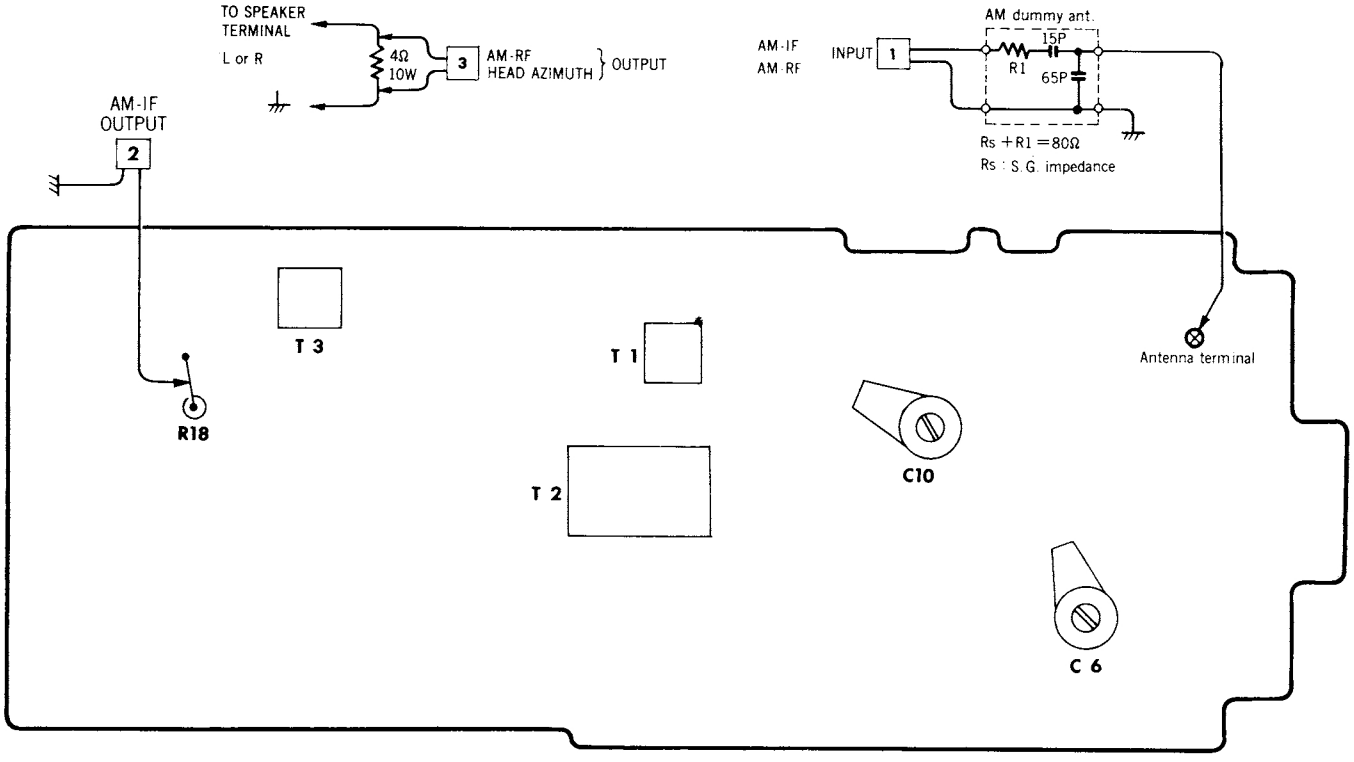

BLOCK DIAGRAM

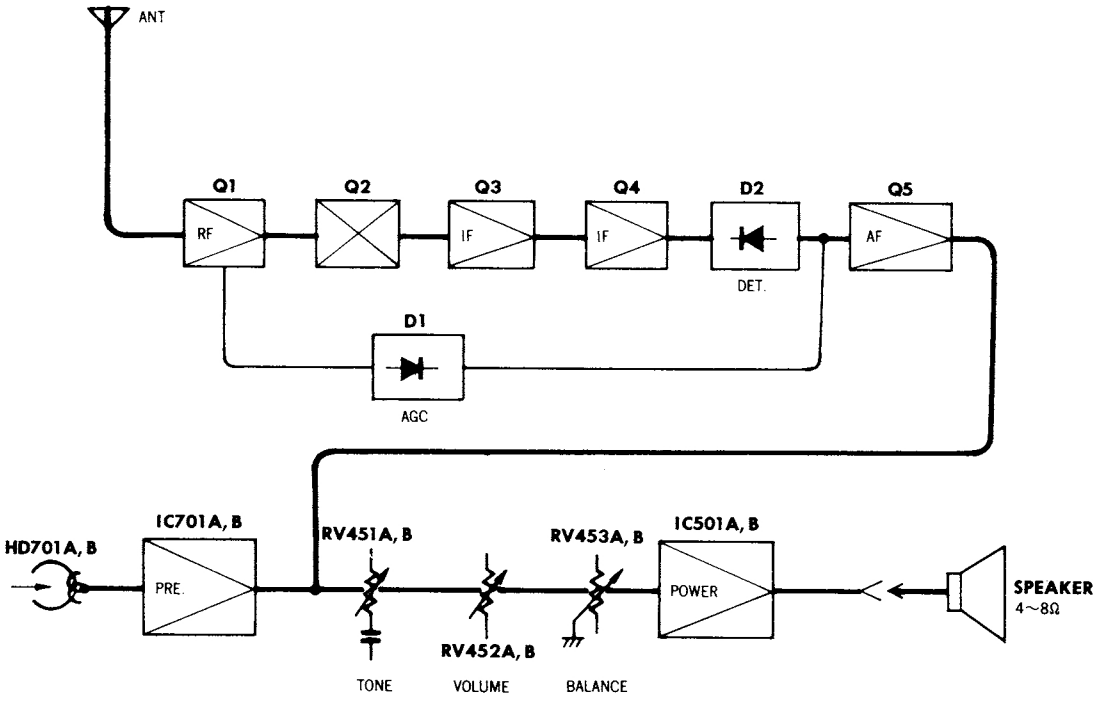

CIRCUIT DIAGRAM

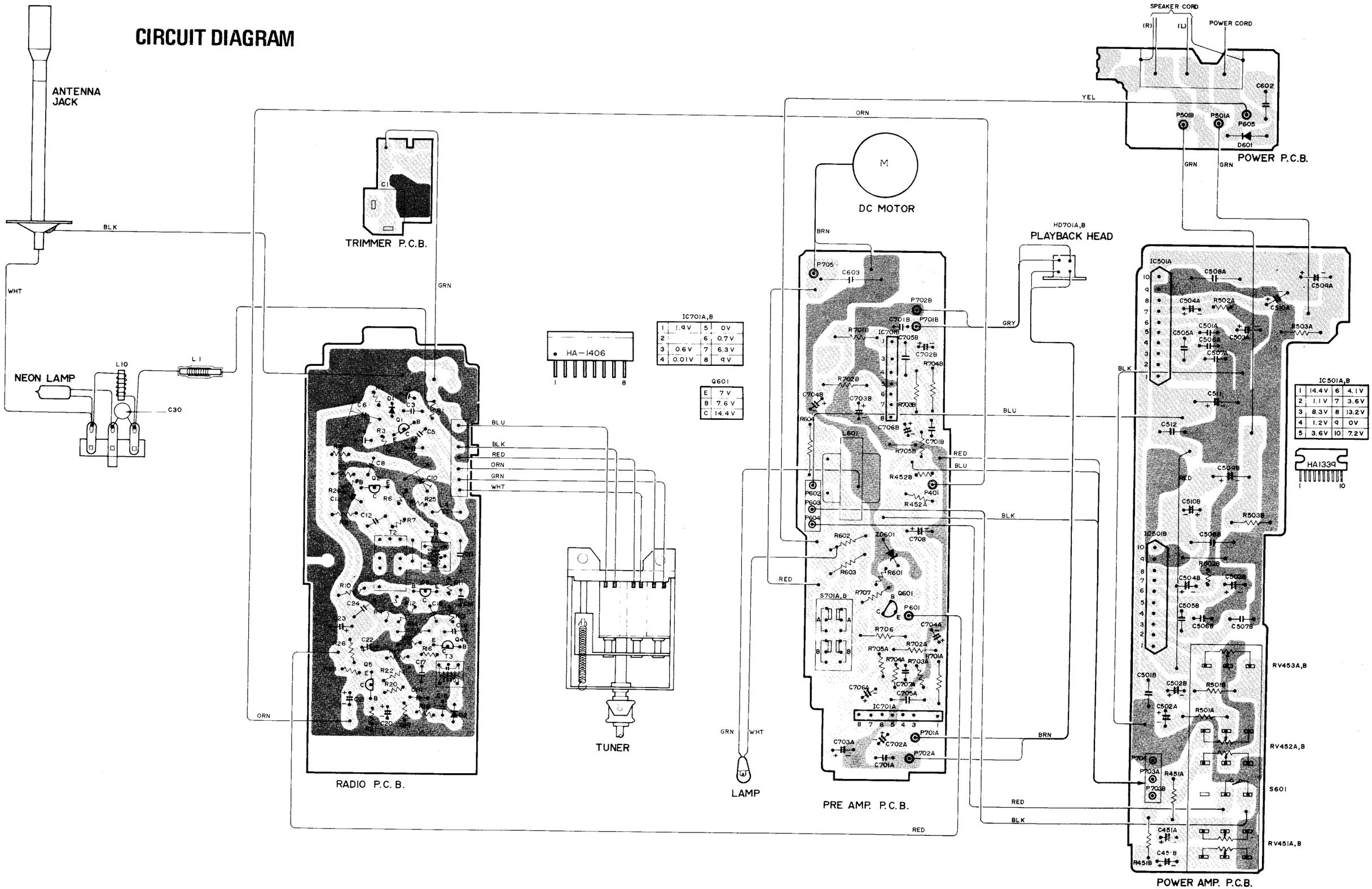

WIRING ON PC BOARD

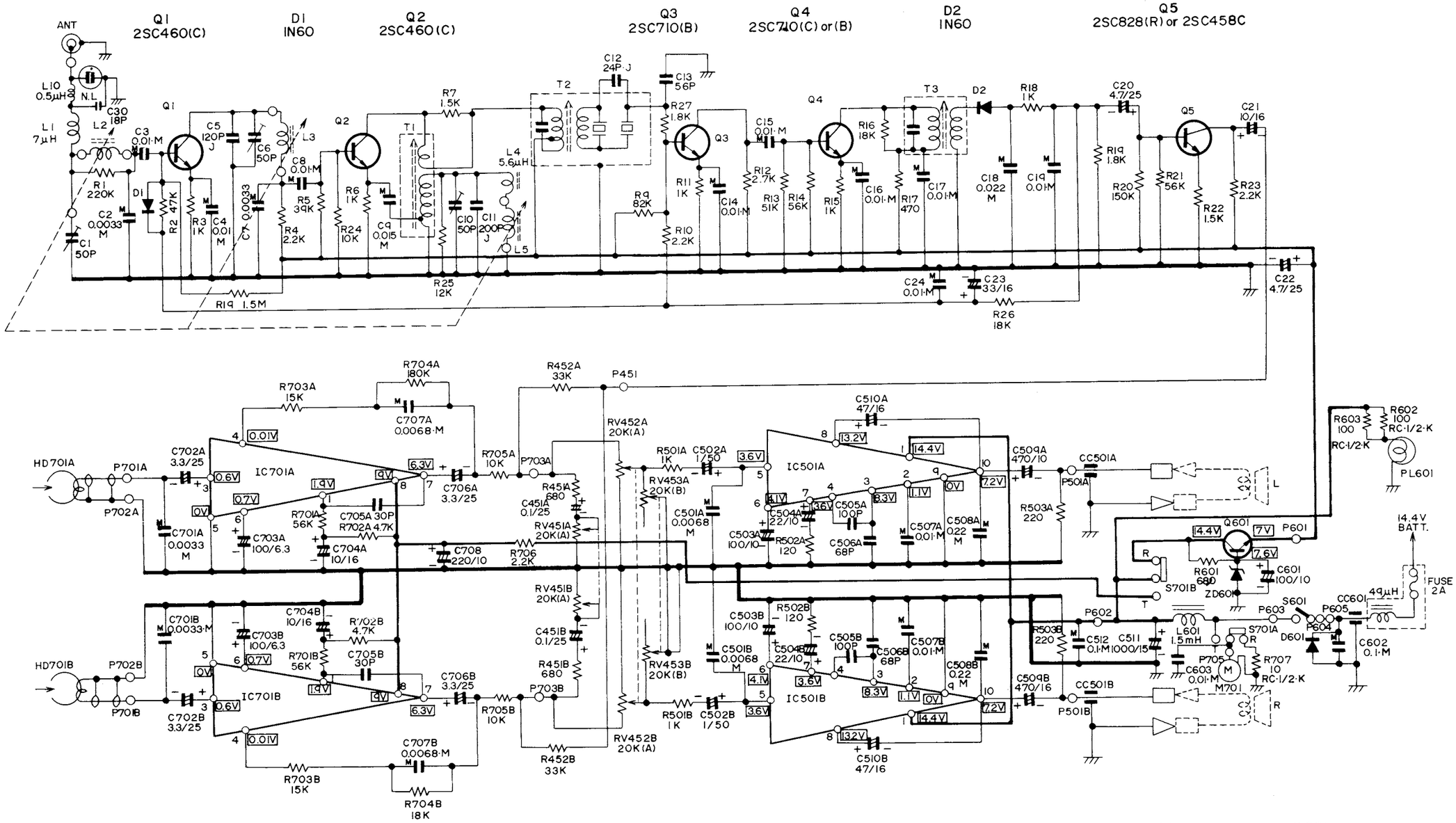

IC701A,B
HA1406ICX2

IC501A,B
HA1339ICX2

ZD601
HZ-7B

Q601
2SC1641S

D601
VO-6A

Note

1. Voltage measured at base of chassis with minimum volume control and no signal.
2. Nomenclature of Resistors Capacitors.

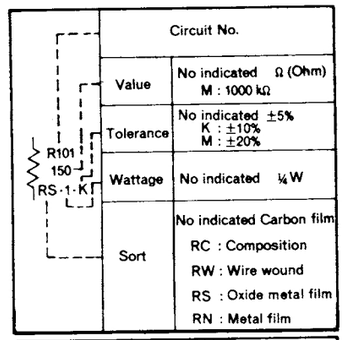

Circuit No.		
	Value	No indicated Ω (Ohm) M : 1000 kΩ
	Tolerance	No indicated ±5% K : ±10% M : ±20%
	Wattage	No indicated ¼ W
	Sort	No indicated Carbon film RC : Composition RW : Wire wound RS : Oxide metal film RN : Metal film

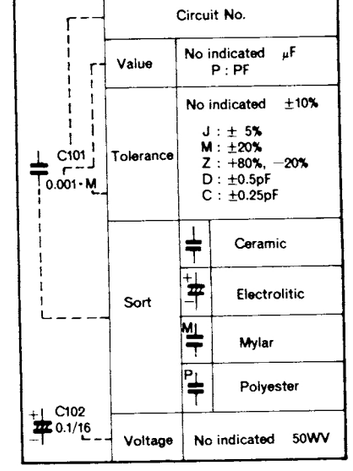

Circuit No.		
	Value	No indicated μF P : PF
	Tolerance	No indicated ±10% J : ± 5% M : ±20% Z : +80%, −20% D : ±0.5pF C : ±0.25pF
	Sort	Ceramic Electrolitic Mylar Polyester
	Voltage	No indicated 50WV

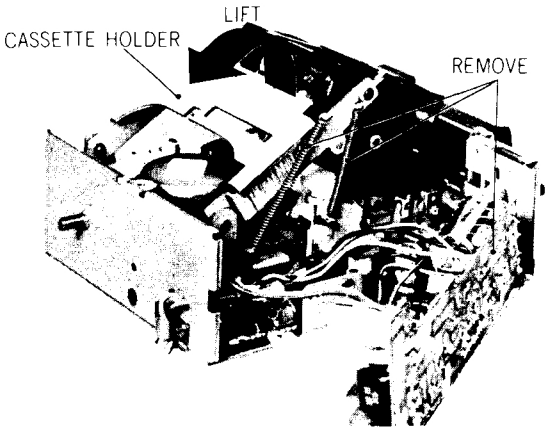

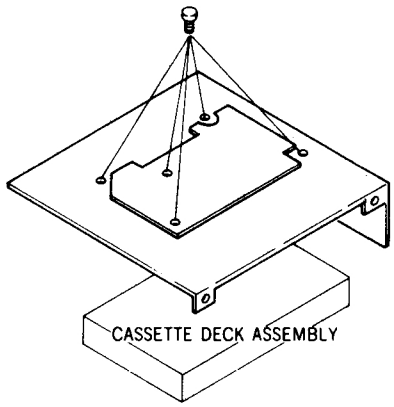

LUBRICATION

Lubricate one or two drops of machine oil to rotating point or lubricate grease to sliding point. Lubricate the respective parts listed below once every 1,000 hours or once a year under normal conditions of use. Avoid oiling then excessively, or rotation may become irregular because of oil splashes.

Motor shaft bearing.....Oil
Capstan shaft bearing.....Oil
Pinch roller shaft bearing ..... Oil

ADJUSTMENT

Radio block

Sequence			Connection		Setting		Adjusting	
			Signal Source (Connect to)	Output Indicator (Connect to)	Tuning	Signal	Adjust	Indication
1	1. Connect resistor (4Ω, 10W) to speaker terminal. 2. Set knob (VOLUME : MAX, TONE : HIGH, BALANCE : CENTER)							
2	**AM-IF**		AM Sweep gen. [1]	Oscilloscope [2]	f max.	455 kHz	T3 T2	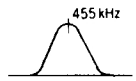
3	**AM-RF**	OSC. 1	AM Signal gen. 400 Hz 30% Mod. Output : 17 dB [1]	VTVM [3]	f min.	510 kHz	T1	V max.
		OSC. 2			f max.	1650 kHz	C10	
		ANT.			1000 kHz		C1 (Ant. trimmer) C6	

Tape deck block

Sequence	Connection	Setting					Adjusting	
	Output indicator (Connect to)	Test tape	Mode	Volume	Balance	Tone	Adjust	Indication
HEAD AZIMUTH	VTVM [3]	Azimuth test tape (TEAC, MTT-114, 10 kHz)	Playback	Max.	Center	High		V max.

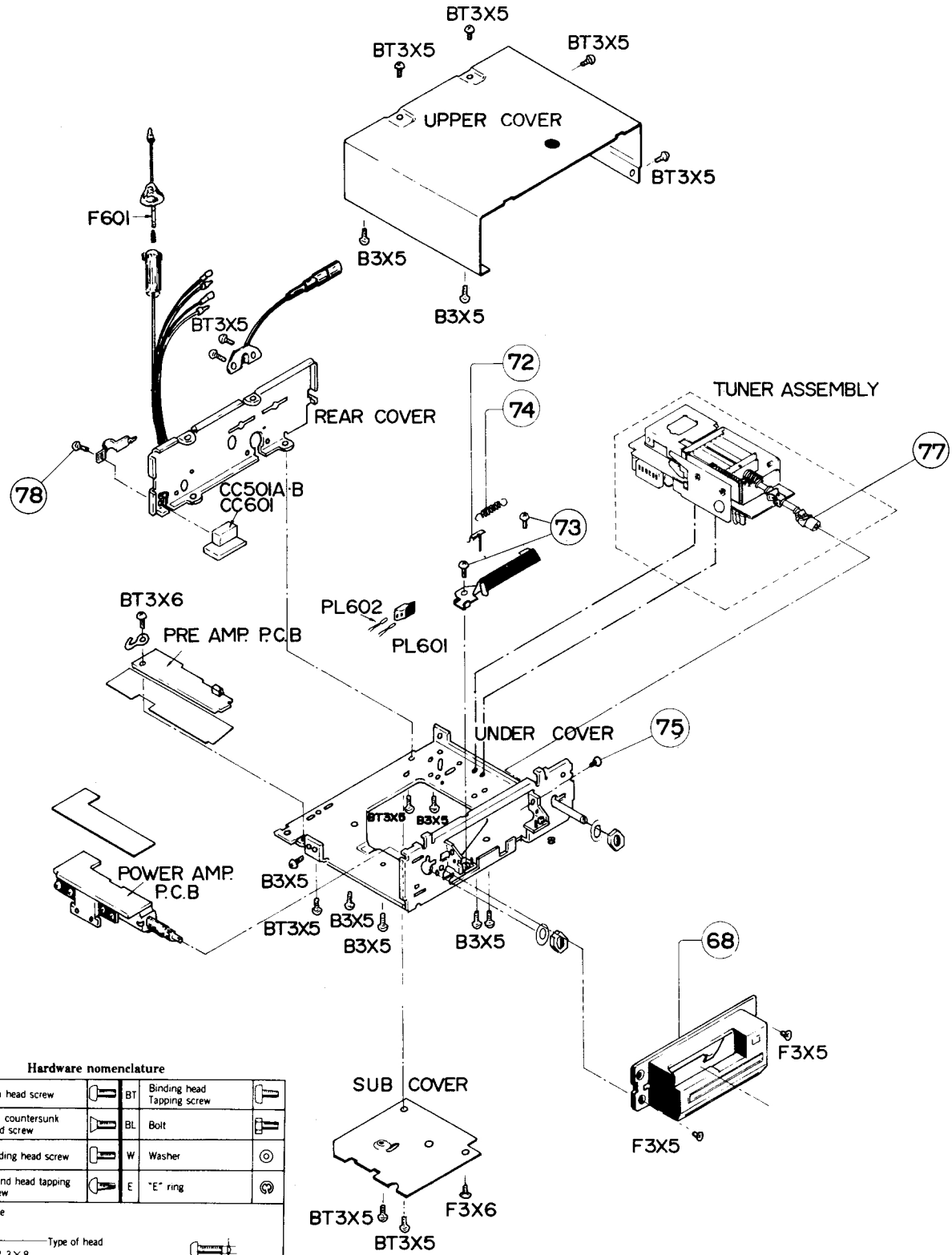

Hardware nomenclature

P	Pan head screw		BT	Binding head Tapping screw	
F	Flat countersunk head screw		BL	Bolt	
B	Binding head screw		W	Washer	
T	Round head tapping screw		E	"E" ring	

Example

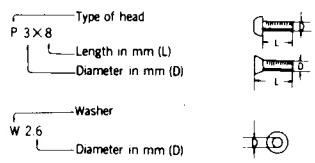

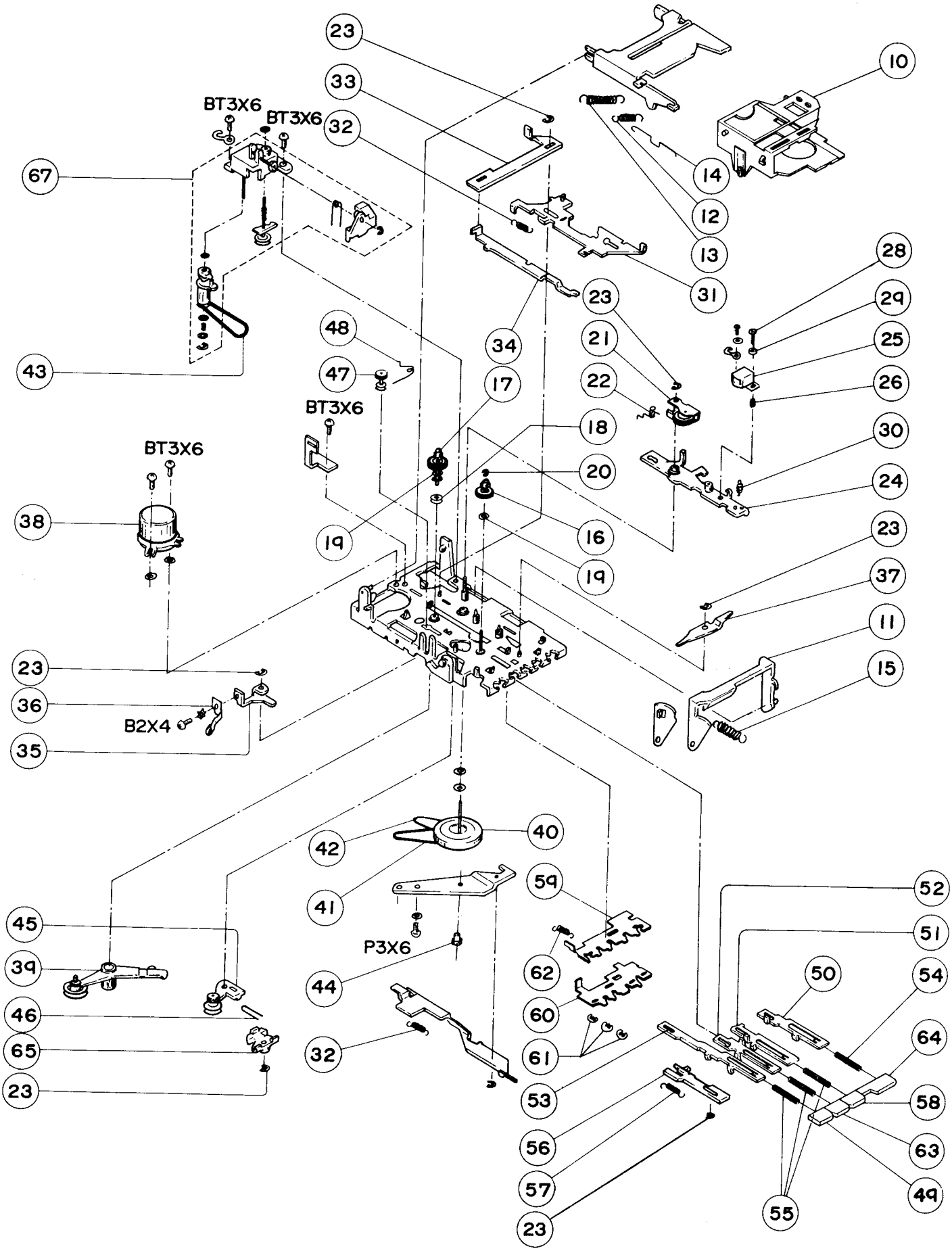

BT3X6
BT3X6
BT3X6
BT3X6
B2X4
P3X6
10
11
12
13
14
15
16
17
18
19
19
20
21
22
23
23
23
23
23
23
24
25
26
28
29
30
31
32
32
33
34
35
36
37
38
39
40
41
42
43
44
45
46
47
48
49
50
51
52
53
54
55
56
57
58
59
60
61
62
63
64
65
67

REPLACEMENT PARTS LIST

SYMBOL NO.	PHILIPS CODE NO.	DESCRIPTION
Capacitors		
C1	4802 125 67035	Trimmer 50pF
C6,C10	4802 125 57036	Trimmer 50pF
Transistors & Diodes		
D1,D2	4822 130 30692	Diode IN 60
D601	4802 130 37033	Rectifier V06A (0A626-200)
ZD601	4822 130 30768	Diode - Zener
IC501A,B	4802 209 87076	IC HA1339
IC701A,B	4802 209 87077	IC HA1406
Q1,Q2	4802 130 47158	Transistor 2 SC 460
Q3,Q4	4822 130 44195	Transistor 2 SC 710B (BF494)
Q5	4822 130 40937	Transistor 2 SC 458C (BC548B)
Q601	4822 130 44121	Transistor 2 SC 1641S (BC 338)
Transformers & Coils		
T1	4802 156 17039	M.W. Osc Coil
T2	4802 153 17157	A.M.-I.F.T.
T3	4802 153 17158	A.M.-I.F.T.
L1	4802 157 57057	Choke Coil 7uH
L4	4802 158 17084	AM Coil 5.6MH
L10	4802 158 17085	Choke Coil 0.5uH
L601	4802 152 27005	Choke Coil Power 1.5 MH
Miscellaneous		
	4802 321 27024	Fuse Holder
	4802 535 77071	Joint Tuning
	4802 158 97003	Manual Tuner
ANT	4802 320 17014	Antenna Jack
F601	4802 253 47005	Fuse 2 amp
N.L.	4822 134 20016	Lamp neon
PL 601	4802 134 47031	Lamp
S601	4802 102 57005	Resistor Var. 20K ohm
S701A,B	4802 277 67015	Switch Selector
Cassette Deck		
	4802 492 37188	Spring
10	4802 464 57023	Cassette Holder Assy
11	4802 403 57137	Pick up arm
12	4802 492 37189	Spring
13	4802 492 37191	Spring
14	4802 492 67203	Spring
15	4802 492 37192	Spring
16	4802 528 17069	Turntable assy
17	4802 528 17071	" "
18	4802 528 87074	Pulley
19	4802 532 57023	Washer
20	4822 530 70119	E ring 1.2mm
21	4802 403 47017	Roller arm assy
22	4802 492 67204	Spring

SYMBOL NO.	PHILIPS CODE NO.	DESCRIPTION
23	4802 530 77024	E ring
24	4802 403 57138	Head Plate Assy
25	4802 249 17005	Head
26	4802 492 37027	Spring
28	4802 502 17044	Screw
29	4802 532 17087	Collar
30	4802 492 37193	Spring recording plate
31	4802 403 57139	Plate Assy play
32	4802 492 37194	Spring
33	4802 403 17023	Plate Auto Stop
34	4802 403 17024	Lever Auto Stop
35	4802 403 37041	Arm
36	4802 492 67205	Spring
37	4802 403 57141	Plate Lock Prevention
38	4802 361 27039	Motor Assy
39	4802 403 27027	Pulley Assy take up.
40	4802 528 67027	Fly wheel assy
41	4822 358 30175	Fly wheel belt (1.2 X 1.2 X 124mm)
42	4822 358 30043	Belt drive (1.4 X 1.4 X 70)
43	4802 358 37001	Belt sensing (1.1 X 1.1 X 86)
44	4802 462 77021	Holder
45	4802 403 27028	Arm Assy Change-over
46	4802 492 67206	Spring
47	4802 528 77038	Idler assy
48	4802 492 67207	Spring
49	4802 410 27064	Button assy
50	4802 403 37042	Lever play
51	4802 403 37043	Lever fast forward
52	4802 403 37044	Lever rewind
53	4802 403 17025	Lever stop
54	4802 492 37195	Spring slider
55	4802 492 37196	Spring
56	4802 403 37045	Lever eject
57	4802 492 37011	Spring
58	4802 410 27065	Button F.F.
59	4802 403 57142	Plate lock
60	4802 403 57143	Slider lock
61	4822 530 70121	E. ring 1.5mm
62	4802 492 37197	Spring
63	4802 410 27066	Button rewind
64	4802 410 27067	Button assy
65	4802 403 57144	Arm F.R.
67	4802 403 17026	Auto stop block assy
Miscellaneous		
68	4802 331 37026	Escutcheon assy nose
72	4802 450 87079	Pointer
73	4822 502 11059	Screw pan Hd 2mm
74	4802 492 37015	Spring
75	4802 502 17009	Screw special
77	4822 502 11086	Screw special
78	4822 502 11189	Screw binding 3 X 3mm

Knob, Tone 4802.413.97135
Knob, Rear (Plain) 4802.411.57022
Knob, Front 4802.413.47129
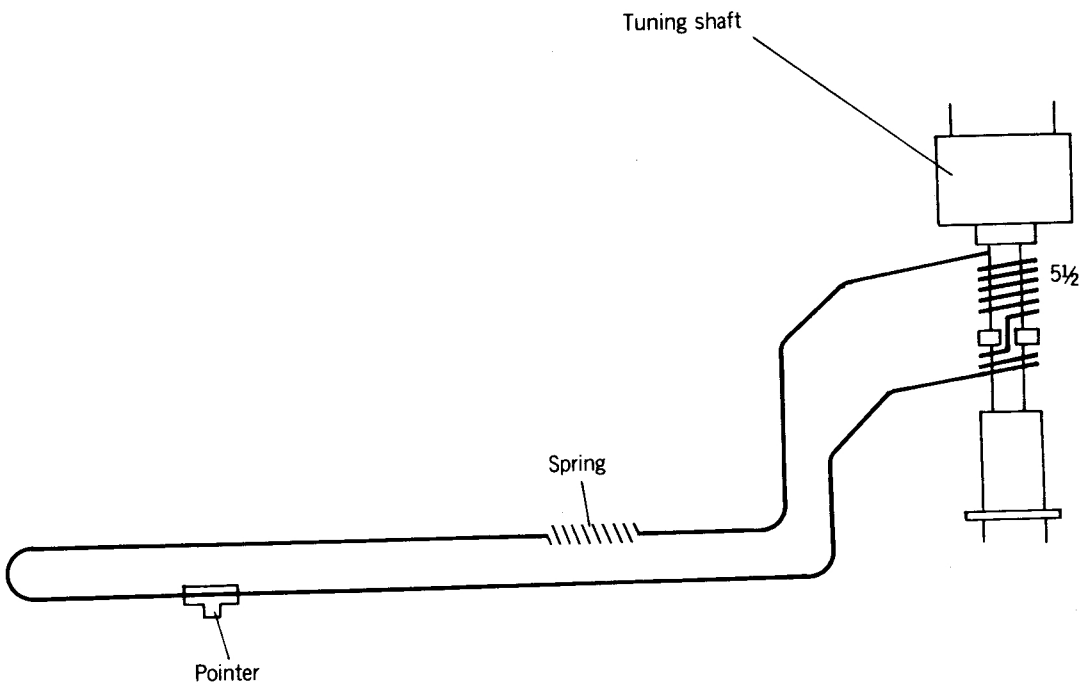
DIAL CORD STRING